$24.95

The ARRL ANTENNA COMPENDIUM

Vol. 7

Proven, practical antenna designs from the world of Amateur Radio.

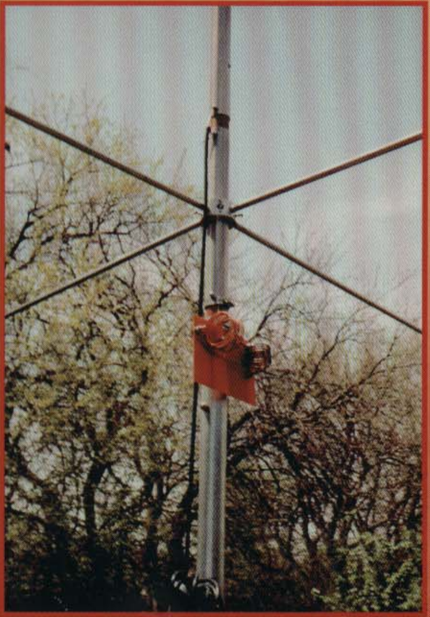

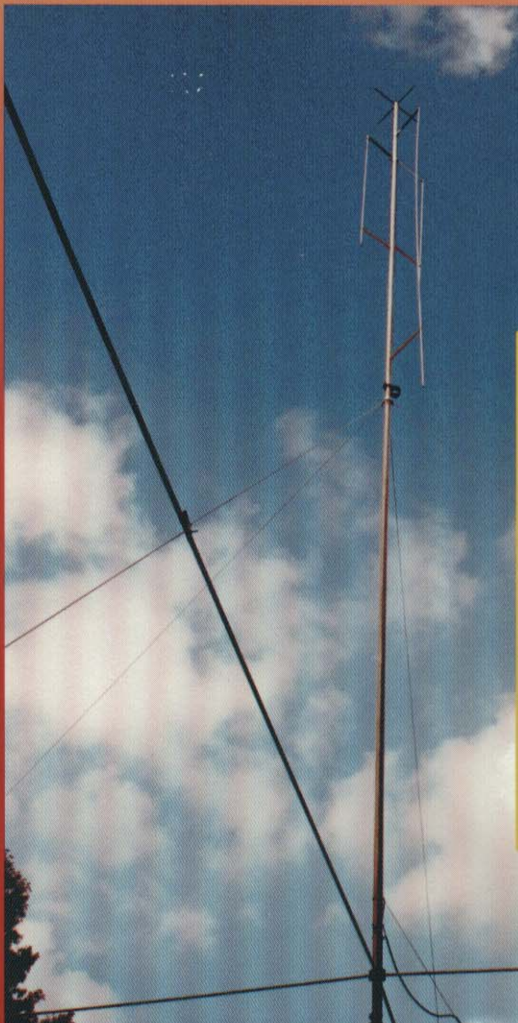

ARRL The national association for AMATEUR RADIO

Vol. 7

The ARRL Antenna Compendium

Editor
R. Dean Straw, N6BV

Assistant Editors
Larry Wolfgang, WR1B
R. Jan Carman, K5MA

Cover Design
Sue Fagan

Production
Michelle Bloom, WB1ENT
Paul Lappen
Jodi Morin, KA1JPA

Technical Illustrations
Dave Pingree, N1NAS
Mike Daniels

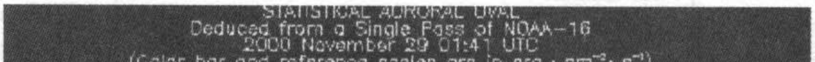

Printed in USA

First Edition

ISBN # 0-87259-860-8

CONTENTS

Foreword

You keep asking us for more articles on antennas and once again we're pleased to deliver them. We've said it before and we'll say it again: **Hams love their antennas**! From the first volume in 1989, the *ARRL Antenna Compendium* series has grown to seven volumes. It has become a prestigious forum for presenting not just theoretical ideas and concepts, but also proven, practical antenna designs from the world of Amateur Radio.

Many well-known authors have contributed articles over the years to the *Antenna Compendium* series, including Al Christman, K3LC; Jack Belrose, VE2CV; L. B. Cebik, W4RNL; Peter Dodd, G3LDO; Carl Luetzelschwab, K9LA; Rudy Severns, N6LF and Frank Witt, AI1H. Each has contributed at least one new article in Volume 7.

In Volume 7 you will find 50 previously unpublished articles, covering a wide range of antenna-related topics—in a total of 14 major categories (with some articles falling into several categories):

- 30, 40, 80 and 160-Meter Antennas—7 articles
- Measurements and Computations—9 articles
- Mobile Antennas—8 articles
- Multiband Antennas—8 articles
- Practical Tips—3 articles
- Propagation and Ground Effects—4 articles
- Quad Antennas—2 articles
- Special Antennas—2 articles
- Stealth Antennas—2 articles
- Tuners and Transmission Lines—5 articles
- Vertical Antennas—10 articles
- VHF/UHF Antennas—1 article
- Wire Antennas—9 articles
- Yagi Antennas—5 articles

There is something here for antenna aficionados of almost any persuasion! Perhaps you may be inspired to write an antenna article of your own. We'd love to see it, as we prepare next for Volume 8.

David Sumner, K1ZZ
Executive Vice President

Newington, Connecticut
July 2002

Instructions for Accompanying Software/Data

The supplementary software and data referred to in this volume includes numerous data files created by the authors of *The ARRL Antenna Compendium, Vol 7* to analyze their antennas, using commercially available antenna modeling software such as *EZNEC* and *EZNEC/4*. The ARRL does not include commercial modeling software, only data for these programs to use. Note also that *NEC-4.1* or *EZNEC/4* are not publicly available because of security restrictions by the US government, although certain institutions have access to this program.

We have put this material on a dedicated ARRLWeb site: **http://www.arrl.org/notes/8608**. The material is organized in a self-installing file *ACV7 Install.EXE*. (In case you're wondering, "ACV7" is our shorthand for "Antenna Compendium Vol 7.") Download this file to a new directory named "ACV7" and run it by clicking on it.

Other Programs

Several authors also include special analysis programs for their articles. All programs are written for the IBM PC, or fully compatible computers.

Organization of the Data/Programs

The main directory (\ACV7) contains this README.PDF file. The other data or programs are organized into separate subdirectories, each named using the author's amateur call sign. When you run the ACV7.EXE file it will create a main subdirectory called ACV7 off the root directory of your hard disk so that you can access the data easily.

For example, the data corresponding to the article by Grant Bingeman, KM5KG, is found in the \ACV7\KM5KG subdirectory, while the article by Peter Dodd, G3LDO, refers to disk files found in the \ACV7\G3LDO subdirectory. Each data file has a distinct filename extension corresponding to the antenna-analysis program in which it is used. The filename extensions on the disk are:

*.ANT—used with K6STI's *AO* or *NEC/Wires* programs
*.EZ—used for the *EZNEC* or *EZNEC/4* programs by W7EL
*.EXE—executable files
*.NWP—data file used with Nittany Scientific's *NEC Win Plus* program
*.XLS—Microsoft *Excel* program.

Antenna Modeling Files

A comment about the antenna modeling data files: Even if you are an experienced antenna modeler, you will gain valuable insight into how the experts work by examining their data files. Some very interesting techniques are displayed in a number of the data files, and it certainly beats typing in the data manually when you wish to see if you can possibly improve or "tweak" a design any further.

EZNEC and *EZNEC/4* are available from Roy Lewallen, W7EL, PO Box 6658, Beaverton, OR 97007.

About the ARRL
The national association for Amateur Radio

The seed for Amateur Radio was planted in the 1890s, when Guglielmo Marconi began his experiments in wireless telegraphy. Soon he was joined by dozens, then hundreds, of others who were enthusiastic about sending and receiving messages through the air—some with a commercial interest, but others solely out of a love for this new communications medium. The United States government began licensing Amateur Radio operators in 1912.

By 1914, there were thousands of Amateur Radio operators—hams—in the United States. Hiram Percy Maxim, a leading Hartford, Connecticut inventor and industrialist, saw the need for an organization to band together this fledgling group of radio experimenters. In May 1914 he founded the American Radio Relay League (ARRL) to meet that need.

Today ARRL, with approximately 170,000 members, is the largest organization of radio amateurs in the United States. The ARRL is a not-for-profit organization that:

- promotes interest in Amateur Radio communications and experimentation
- represents US radio amateurs in legislative matters, and
- maintains fraternalism and a high standard of conduct among Amateur Radio operators.

At ARRL headquarters in the Hartford suburb of Newington, the staff helps serve the needs of members. ARRL is also International Secretariat for the International Amateur Radio Union, which is made up of similar societies in 150 countries around the world.

ARRL publishes the monthly journal *QST*, as well as newsletters and many publications covering all aspects of Amateur Radio. Its headquarters station, W1AW, transmits bulletins of interest to radio amateurs and Morse code practice sessions. The ARRL also coordinates an extensive field organization, which includes volunteers who provide technical information and other support services for radio amateurs as well as communications for public-service activities. In addition, ARRL represents US amateurs with the Federal Communications Commission and other government agencies in the US and abroad.

Membership in ARRL means much more than receiving *QST* each month. In addition to the services already described, ARRL offers membership services on a personal level, such as the ARRL Volunteer Examiner Coordinator Program and a QSL bureau.

Full ARRL membership (available only to licensed radio amateurs) gives you a voice in how the affairs of the organization are governed. ARRL policy is set by a Board of Directors (one from each of 15 Divisions). Each year, one-third of the ARRL Board of Directors stands for election by the full members they represent. The day-to-day operation of ARRL HQ is managed by an Executive Vice President and his staff.

No matter what aspect of Amateur Radio attracts you, ARRL membership is relevant and important. There would be no Amateur Radio as we know it today were it not for the ARRL. We would be happy to welcome you as a member! (An Amateur Radio license is not required for Associate Membership.) For more information about ARRL and answers to any questions you may have about Amateur Radio, write or call:

ARRL—The national association for Amateur Radio
225 Main Street
Newington CT 06111-1494
Voice: 860-594-0200
Fax: 860-594-0259
E-mail: **hq@arrl.org**
Internet: **www.arrl.org/**

Prospective new amateurs call (toll-free):
800-32-NEW HAM (800-326-3942)
You can also contact us via e-mail at **newham@arrl.org**
or check out *ARRLWeb* at **http://www.arrl.org/**

A Full-Sized 160-Meter Shunt-Fed Tower

By Wayde Bartholomew, K3MF
304 Theodore Road
Port Deposit, MD 21904

Here's a winner for someone on a tight budget, but who wants a great antenna for 160 meters.

Since the beginning of my ham career, I have always liked vertical antennas. When we were both Novice-class licensees, I helped my father install a HyGain 18 AVT/WB vertical ground mounted with a bunch of ground radials. It was a great performer.

Since then I have experimented with all types of antennas, but I always seem to go back to the simple vertical. I decided I wanted something big for Topband, and a full size 160-meter vertical is as about as big as they get. I built this vertical on a low budget from cheap TV grade tower (60 feet high), using scrounged aluminum tubing from broken and discarded CB and ham antennas. **Fig 1** is a drawing of my 160-meter vertical.

I installed the system using methods described in *The ARRL Antenna Book*. I insulated the guy wires from the tower with egg-type strain insulators. I made the 65-foot long aluminum tubing "stinger" at the top of the tower using spliced aluminum booms, which ranged in diameter from 1 inch down to 7/16-inch.

I clamped the bottom 5 feet of the 65-foot tubing to a leg of the tower with muffler clamps, and fastened a piece of copper strap smeared in Penatrox from the tubing to the tower to ensure a good electrical connection.

Fig 2 is a photograph looking up the tower, which I also used to support other wire antennas. This includes the antenna fed with the 450-Ω window-line at the left. The gamma-matching wire is shown on the right, supported by PVC standoff insulators. **Fig 3** shows details at the base of the tower, with the gamma-capacitor box at the right and the large-diameter ground radial wires connected to each tower leg.

Performance

I do not have any antenna modeling or fancy signal-strength devices to measure performance. All tests were comparison checks with a full size horizontal dipole at 60 feet. Using 100 W output, only stations in Europe with excellent receiving capabilities were barely able to hear me using the

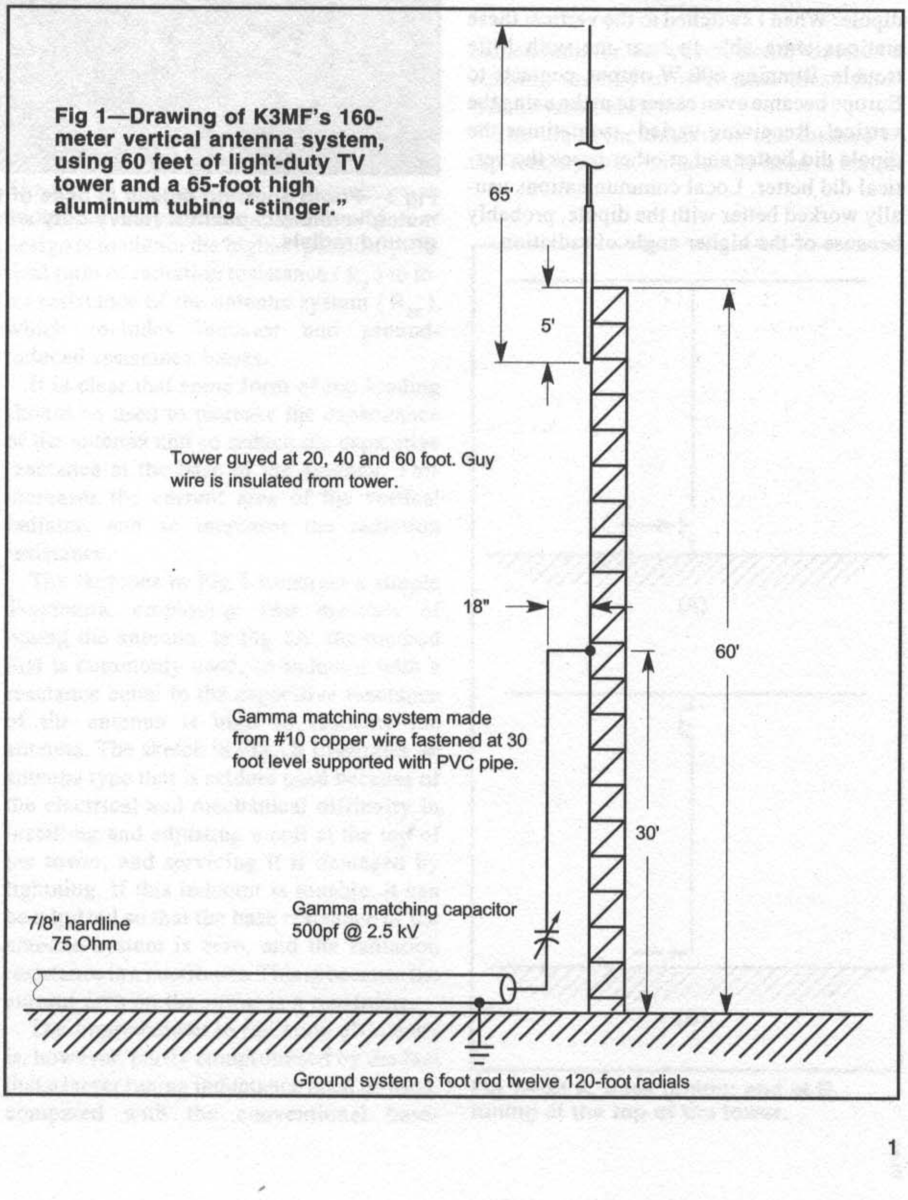
Fig 1—Drawing of K3MF's 160-meter vertical antenna system, using 60 feet of light-duty TV tower and a 65-foot high aluminum tubing "stinger."

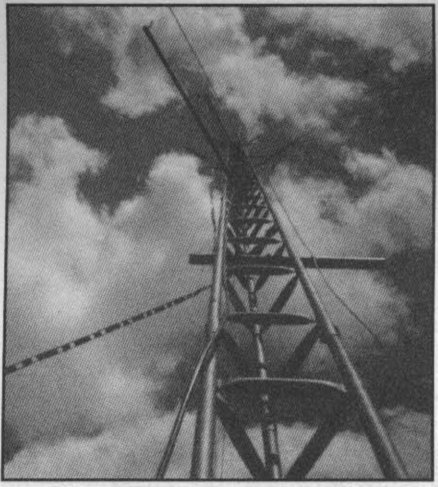
Fig 2—Photo looking up the 160-meter tower.


Fig 3—Photo showing details at base of tower. At right is housing for the gamma-match variable capacitor. Heavy-duty wires connected to each tower leg act as ground radials.

dipole. When I switched to the vertical these stations were able to hear me with little trouble. Running 600 W output, contacts to Europe became even easier to make using the vertical. Receiving varied—sometimes the dipole did better and at other times the vertical did better. Local communications usually worked better with the dipole, probably because of the higher angle of radiation.

An Electrically Small Umbrella Antenna for 160 Meters

John S. Belrose, VE2CV, ARRL TA
17 rue de Tadoussac
Aylmer QC J9J 1G1
Canada
e-mail: **john.belrose@crc.ca**

VE2CV examines a very interesting antenna for TopBand.

INTRODUCTION

In 1982 I wrote an article[1] on umbrella antennas, based on an extensive experimental modeling study of base-fed antennas. However, in that article I described a method that could be used to feed an antenna with umbrella wires suspended from a grounded tower, by feeding the tower as a top-loaded folded monopole—and this method of feed became the title of the article (editor's choice). More recently, an interest in the folded umbrella version resurfaced [Bob Eldridge, VE7BS, private communications, August 1998]. Apparently some of VE7BS's friends from "down under" (VK3ZL and VK6VZ) landed on my *Ham Radio* article and were asking questions about the folded version.[2]

This resulted in revisiting my files on umbrella top loaded antennas, a file deck that had been supplemented by follow-on numerical modeling studies (I use NEC-4D, *EZNEC Pro* version). This search brought to light a most interesting version of umbrella antennas. This *interesting version* was devised by Carl E. Smith, since 1998 a Silent Key, which is an umbrella antenna with a "tuned" insulated counterpoise.[3] The subject of elevated radials is a topic that has interested me for a number of years, and the configuration of sloping umbrella wires above insulated radial wires seemed to me to be a very interesting antenna type to study by numerical simulation. The present article is a rewrite of a paper I presented at the ACES 1999 Conference,[4] an extensive rewrite since I have carried out additional studies since that paper was written.[5]

The antenna system described in this present article has high radiation efficiency for an antenna so electrically small (0.06 λ at 1900 kHz), as well a number of unique features.

THE UMBRELLA ANTENNA

Vertical radiators that are electrically short have a low radiation resistance, a relatively high capacitive reactance and, for an efficient radiator, a relatively narrow bandwidth. For this type of antenna to take power, the antenna's impedance must be matched to the characteristic impedance of the transmission line feeding the antenna. The tuning inductor required introduces an additional loss resistance, and the object of design is to obtain the highest possible practical ratio of radiation resistance (R_r) to total resistance of the antenna system (R_{as}), which includes inductor and ground-induced resistance losses.

It is clear that some form of top loading should be used to increase the capacitance of the antenna and so reduce the capacitive reactance at the base of the antenna. This increases the current area of the vertical radiator, and so increases the radiation resistance.

The sketches in **Fig 1** illustrate a simple T-antenna, employing two methods of tuning the antenna. In Fig 1A, the method that is commonly used, an inductor with a reactance equal to the capacitive reactance of the antenna is used to resonate the antenna. The sketch in Fig 1B illustrates an antenna type that is seldom used because of the electrical and mechanical difficulty in installing and adjusting a coil at the top of the tower, and servicing it if damaged by lightning. If this inductor is tunable, it can be adjusted so that the base reactance of the antenna system is zero, and the radiation resistance is a maximum. This is because the current area on the tower is a maximum.

The improvement in radiation efficiency is, however, partly compromised by the fact that a larger tuning inductance must be used, compared with the conventional base-loaded radiator. However, Smith[3] devised a cunning method to overcome these limitations (see below).

The umbrella antenna is one method to top-load a tower, without the need to install

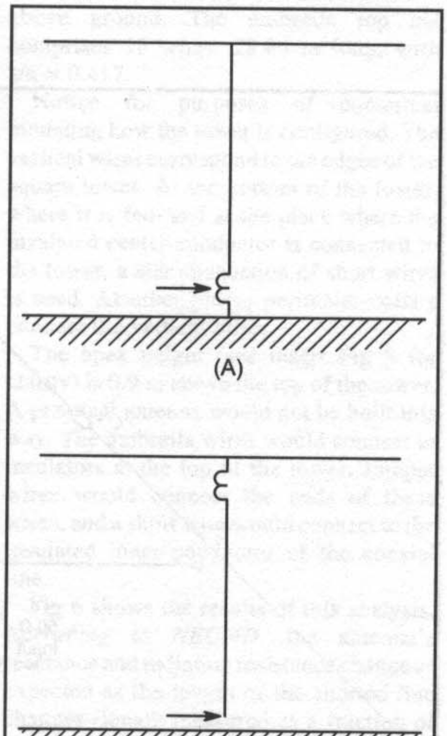

Fig 1—At A, base tuning; and at B, tuning at the top of the tower.

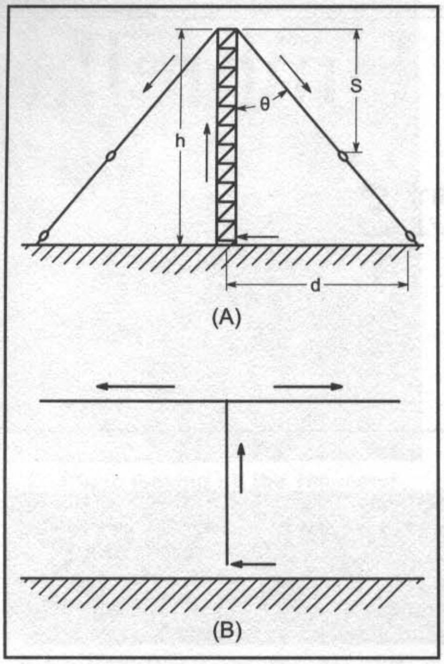

Fig 2—Sketches illustrating phasing of currents on umbrella and T-type antennas.

additional towers to support the top loading. This antenna type is illustrated in **Fig 2A**. The top loading consists of a number of active umbrella wires, connected to the top of the tower, and strung obliquely to ground. The important parameters for such an antenna are the height, h, of the tower; the horizontal distance, d, from the base of the tower to the extremities of the insulated guys supporting the conducting umbrella wires; and the vertical distance, s, from the top of the tower to the height where the umbrella wires are broken by an insulator.

The sketch in Fig 2A also illustrates the phasing of the currents on the umbrella antenna, compared with (for example) the T-type antenna in Fig 2B. In the case of the T- type, the currents on the flat top and on the vertical part of the antenna system are not opposing, since the currents on these elements are orthogonally oriented (in space). Considering the antenna and its image in the ground, please recall that only the currents on vertical parts of the antenna contribute appreciably to radiation. The currents on the flat top and on the image of the flat top in the ground are in phase opposition, and so essentially cancel as far as radiation is concerned. The currents on the vertical parts of the radiator and their image in the ground are in-phase.

In the case of the umbrella antenna, the currents on the umbrella wires have a vertical component that is oppositely directed to the current on the tower and therefore radiation from the top part of the tower over the distance s and from the umbrella wires partially cancel. Thus, while the capacitive reactance of the top hat increases, and the base reactance of the antenna decreases, as the length (and number) of umbrella wires increase, the radiation resistance, R_r, first increases and then decreases. The radiation resistance, in accord with the author's past experimental and numerical modeling studies, is a maximum when s/h equals (about) 0.43.

THE SMITH TUNED COUNTERPOISE UMBRELLA ANTENNA

Smith, in the reference cited above, described an electrically short umbrella antenna system that employs a tuned, elevated electrically short radial wire ground system (see **Fig 3**). This is an interesting antenna, not only because of my interest in insulated elevated radials, but because of the way Smith configured the tower.

A low-loss inductance at the top of the tower is achieved by insulating a suitable conductor inside the tower and shorting it to the tower at some judicious length away from the end. This arrangement forms an air-insulated coaxial line, with one end open and the other end short-circuited. The inner conductor of this shorted coaxial line is connected to the top-hat conductors. This is rather clever and I have not previously seen such an arrangement. But for a numerical simulation study, could *NEC-4D* model such an antenna system?

The current distribution on the top-hat conductors can be assumed to be sinusoidal,

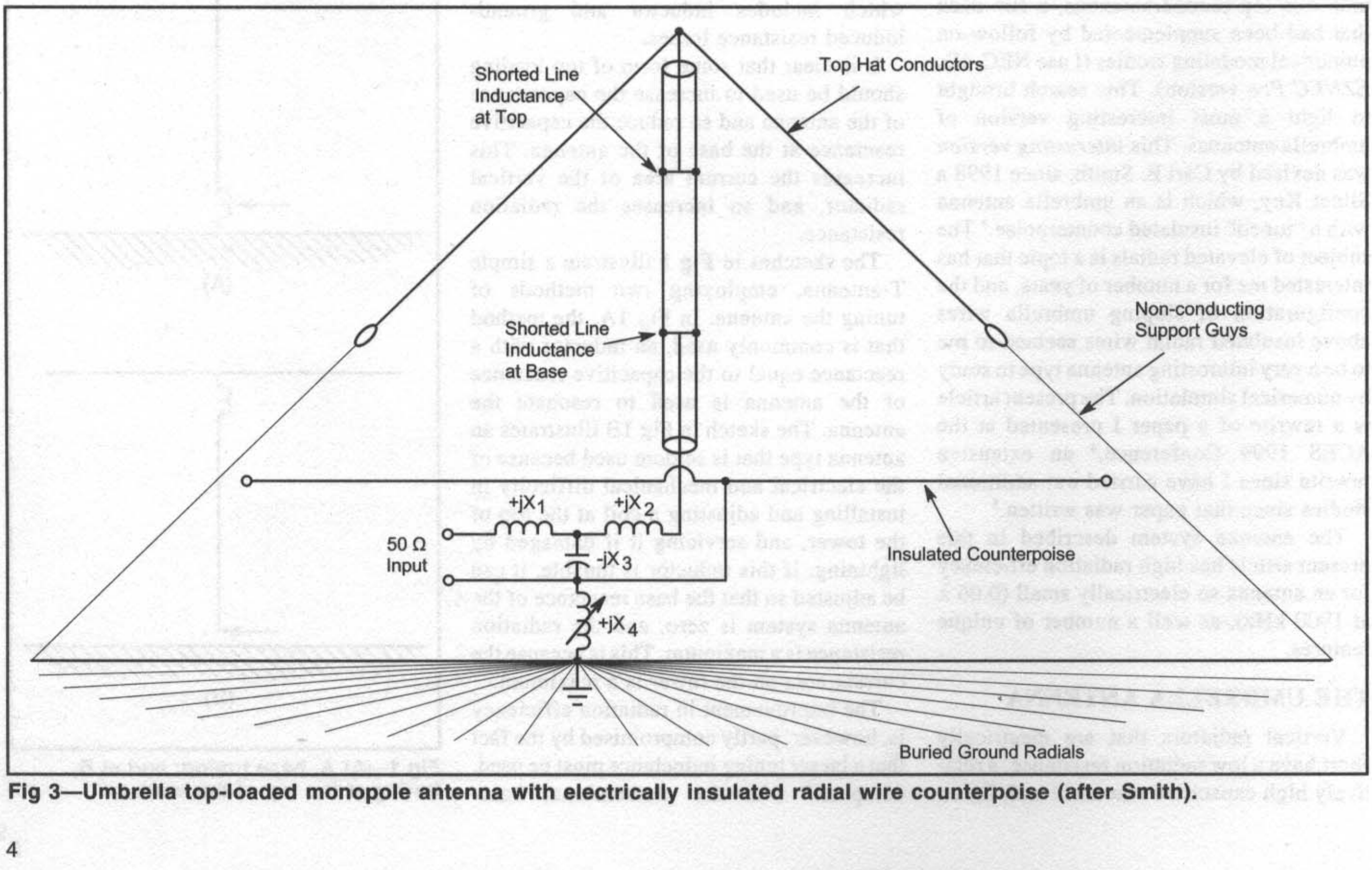

Fig 3—Umbrella top-loaded monopole antenna with electrically insulated radial wire counterpoise (after Smith).

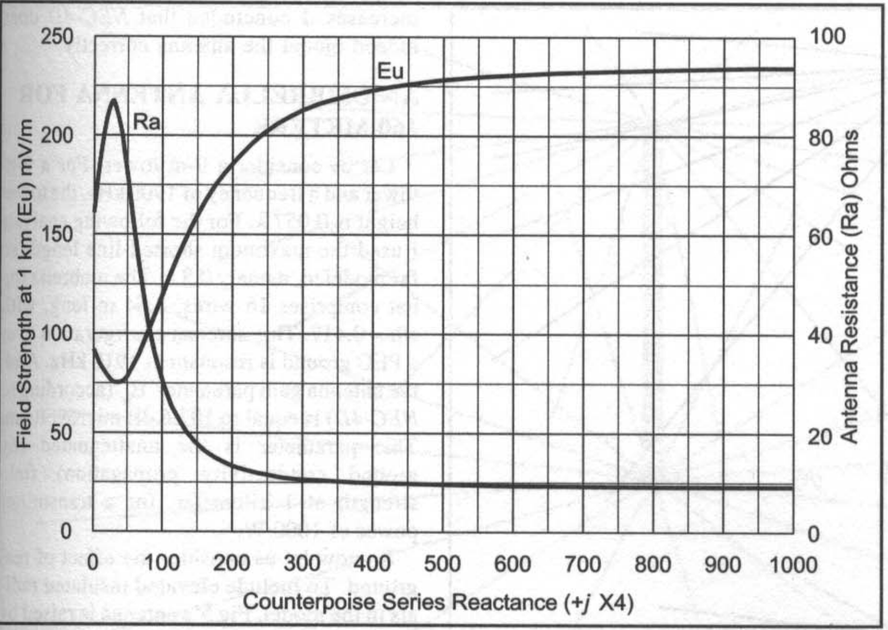

Fig 4—Calculated change in unattenuated field strength (E_u) at 1 km and antenna system base resistance (R_a), versus counterpoise series reactance (+ *j* X4).

with zero current at the outer ends and a maximum current at the top of the tower where they are joined together. At this point the top-loading inductance in series can replace an appreciable portion of the sine wave, with the result that the current distribution on the tower can be essentially constant.

Note that more series inductance at the bottom of the tower can be added by insulating a conductor up inside the tower to a shorting point—but for an electrically short antenna I have placed inductance only at the top of the tower. A low-loss base-loading coil is used to resonate the antenna system.

Smith describes his view with respect to minimizing ground loss. The E-field between the top hat and the counterpoise can be likened to a transmission line that is open at one end and shorted at the other. There is an E-field between the top hat and the counterpoise, and some of the E-field passes through to the ground beneath. The counterpoise potential is maintained (see below) to minimize the current in the lossy ground. I have previously noted that for an L-type antenna with elevated radials, one radial wire should be so arranged that it lies directly under the one arm of the L-shaped configuration.

Continuing, in Smith's words: "... the counterpoise potential is maintained so as to minimize the current in the lossy ground. The counterpoise reactance *+j* X4 in Fig 3 is adjusted to minimize ground losses."

COUNTERPOISE TUNED TO MAXIMIZE THE FAR FIELD

Smith indicates that the proper method for tuning the counterpoise is to observe the far field strength while tuning the system. Smith's paper reported that dramatic variations in the field strength were observed in the far zone while the counterpoise was tuned. Certainly the antenna system-coupling unit (*+j* X1, *+j* X2 and *–j* X3) tunes and matches the antenna system to the coaxial feeder (50-Ω input), no matter what the reactance of *+j* X4.

So how does changing the reactance *+j* X4 affect the performance of the antenna system? For a case study I modeled an antenna system described in some detail in the paper by Smith, an antenna in use at Kodiak, Alaska, station KVOK, operating on 560 kHz. This antenna employs a vertical tower 43.5 m high (0.08 λ), with 16 drooping umbrella wires 38.1 m long (0.071 λ), and s/h = 0.5, fed against 16 insulated radial wires, 3 m in height, and 45.7 m long (0.085 λ). The counterpoise was connected to the antenna system-coupling unit, and to ground through a counterpoise series reactance.

According to *NEC-4D* there is indeed a dramatic change in the unattenuated field strength E_u (see below) at 1 km, and the resistive term of the antenna's impedance, as the counterpoise series reactance is increased (see **Fig 4**)—but the field strength is a maximum if the counterpoise series reactance is infinite (*+j* X4 is removed).

There is therefore, in the author's view, no need for a connection to ground, excepting connection to ground stakes for lightning protection. In this case a current balun would be required to feed the tower against the insulated counterpoise.

I have[4] computed the radiation characteristics for KVOK's antenna for comparison with the measured data reported by Smith. *NEC-4D* did in indeed model this antenna system quite effectively.

THE SMITH TOWER ARRANGEMENT NUMERICALLY MODELED

Smith configured his tower to effectively place a low-loss inductance at the top of the tower. This decreases the resonant frequency of the antenna system and increases the effect of the top loading (the current on the parts of the tower that radiate can be almost constant). This method can also be used to resonate the antenna system.

Can *NEC-4D* model this tower configuration? For this part of the study I modeled an MF tower with umbrella wires over a PEC (Perfect Electrical Conducting) ground (see **Fig 5**) to compute the base impedance of an umbrella antenna unmodified by any use of an electrically short, elevated radial system over real ground. This case study considers a 30-m tower having a square cross-section (face width 1.27 m), with its base (insulator length) 1 m above ground. The umbrella top hat comprises 16 wires, 28.84 m long, with s/h = 0.417.

Notice for purposes of numerical modeling how the tower is configured. The vertical wires correspond to the edges of the square tower. At the bottom of the tower, where it is fed, and at the place where the insulated center conductor is connected to the tower, a star connection of short wires is used. At other places perimeter collars connect the vertical wires.

The apex height (see insert Fig 5 for clarity) is 0.9 m above the top of the tower. A practical antenna would not be built this way. The umbrella wires would connect to insulators at the top of the tower. Jumper wires would connect the ends of these wires, and a short wire would connect to the insulated inner conductor of the coaxial line.

Fig 6 shows the results of this analysis. According to *NEC-4D*, the antenna's reactance and radiation resistance change as expected as the length of the shorted line changes (length measured as a fraction of the antenna height). As the length of the shorted line increases, the inductive reactance effectively placed at the top of the tower increases, the base reactance decreases, and the radiation resistance increases. I concluded that *NEC-4D* does indeed model the antenna correctly.

AN UMBRELLA ANTENNA FOR 160 METERS

Let us consider a 9-m tower. For a 9-m tower and a frequency of 1900 kHz, the tower height is 0.057 λ. For the following analysis I used the maximum shorted-line length so far modeled, namely 0.8 h. The umbrella top hat comprises 16 wires, 8.64 m long, with s/h = 0.417. This antenna configuration over a PEC ground is resonant at 1910 kHz. And, the antenna gain parameter E_u (according to *NEC-4D*) is equal to 107.6 dB microvolts/m. This parameter is the unattenuated (by ground conductivity propagation) field strength at 1 kilometer, for a transmitter power of 1000 W.

So now let us consider the effect of real ground. To include elevated insulated radials in the model, Fig 5's antenna is raised by 1.5 m, and the tower is fed against 16 elevated radials at a height of 1.5 m, and a length of 12 m. See **Fig 7**.

Again, the antenna over a PEC ground (no radials fed against ground) was resonant at 1910 kHz. The radial wire lengths are electrically short (0.076 λ), and so this places additional capacitive reactance at the feed point. The antenna system impedance $Z_{as} = 6.6 - j71\ \Omega$, according to *NEC-4D*, for the case of average ground beneath the antenna. And, E_u (assuming a resonating coil with an unloaded Q of 300) is equal to 106.5 dB microvolts/m. This means that the performance of our electrically short antenna is –1.1 dB with respect to the same antenna (without radials) fed against a PEC ground.

Effect of Number of Radial Wires (and Number of Sloping Umbrella Wires)

While I consider the 16-wire version of this antenna to be optimum, the average amateur may not want 16 elevated horizontal wires and 16 sloping umbrella wires above his head and in his back yard. I therefore studied the effect of reducing the numbers of wires. I numerically modeled the Fig-7 type antenna, for 4 and 8-wire systems.

In **Fig 8**, I plot antenna efficiency, or relative gain parameter (in dB), and the reactance of the base-loading coil needed to resonant the antenna system versus the number of wires. For this plot, 0 dB corresponds to the umbrella antenna with 16-umbrella wires fed against a PEC ground

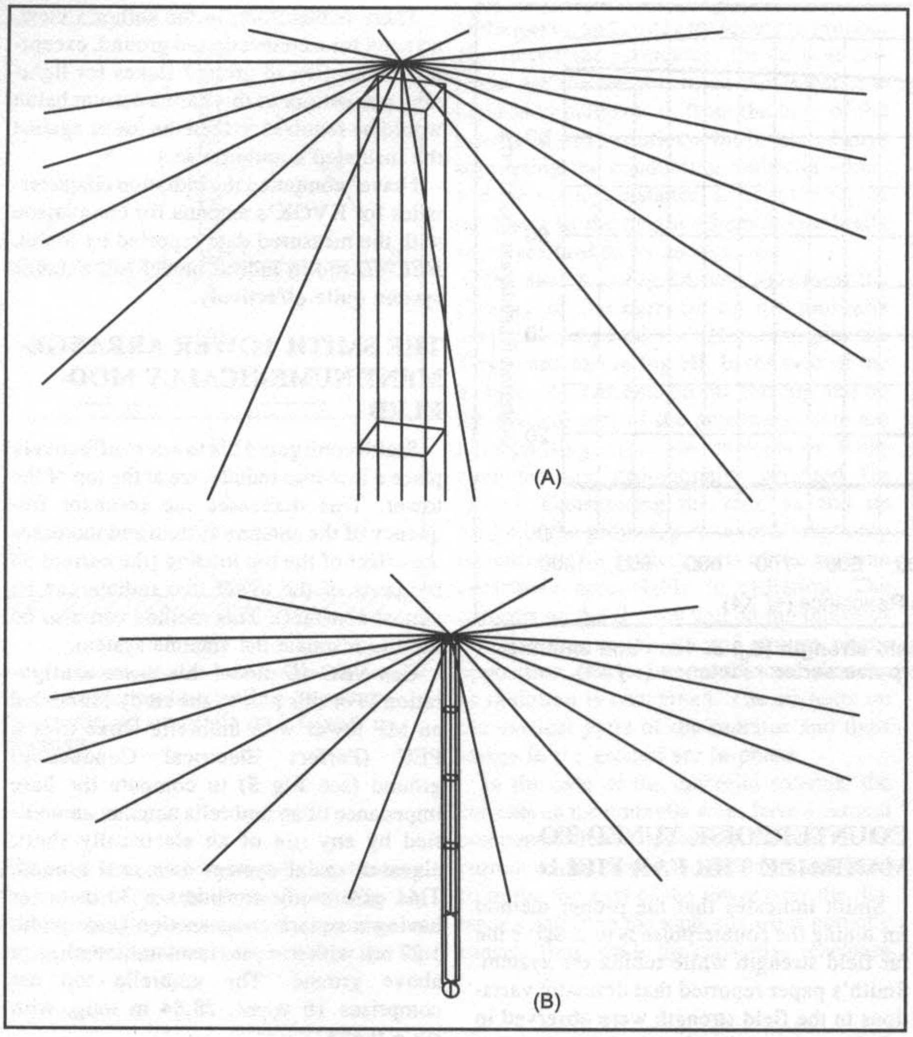

Fig 5—Umbrella antenna with a sectionalized tower, over a PEC (perfect electrical conducting) ground. Insert expanded view shows detail at the top of the tower.

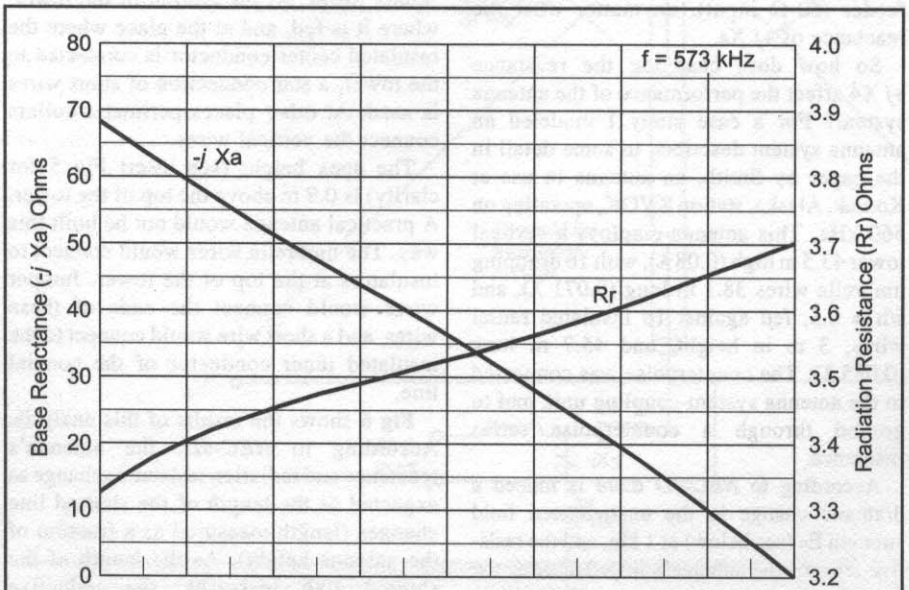

Fig 6—Base reactance ($-j X_a$) and radiation resistance (R_r) versus length of shorted line as a fraction of tower height, for antenna in Fig 5. See text for antenna dimensions.

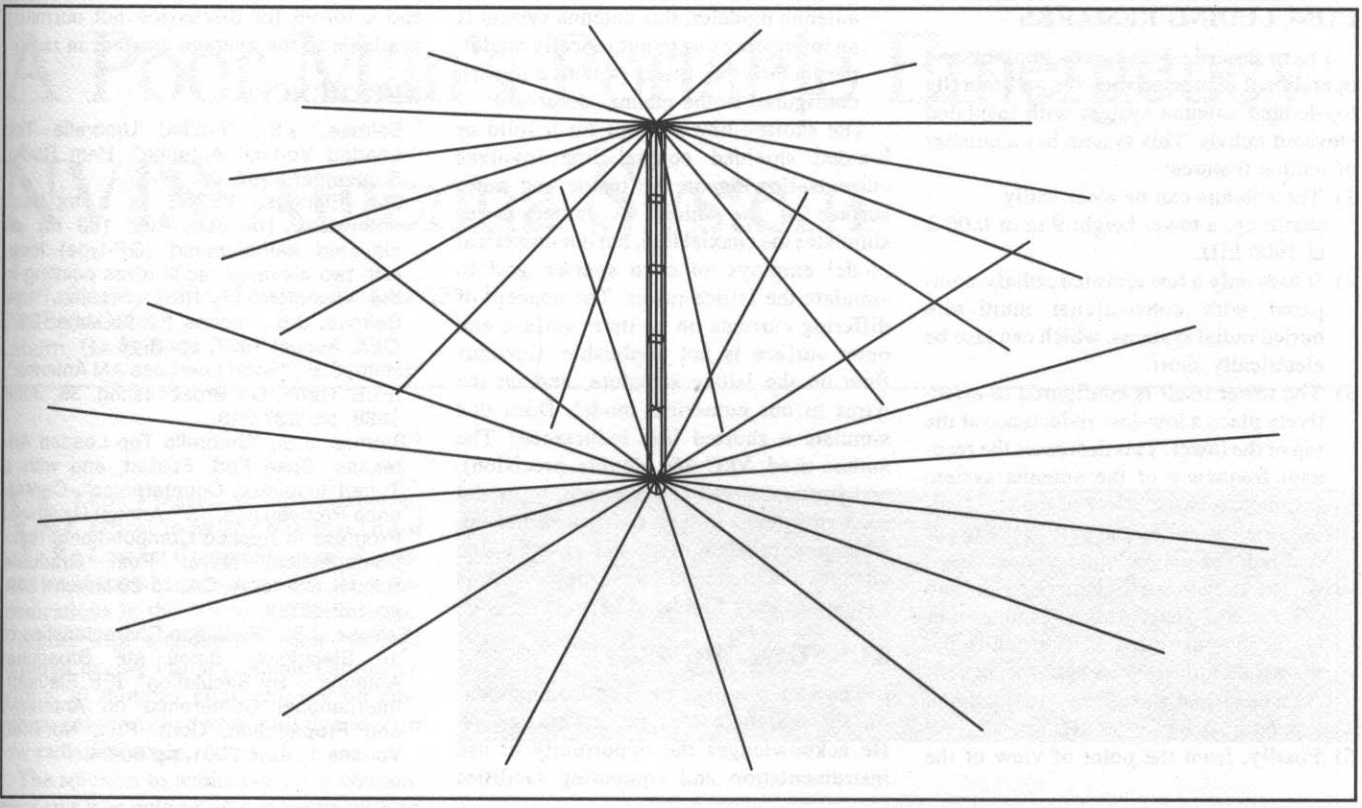

Fig 7—Fig 5's antenna raised and fed against 16 insulated radials, 12 m long, and 1.5 m high. The shorted line length is 0.8 h.

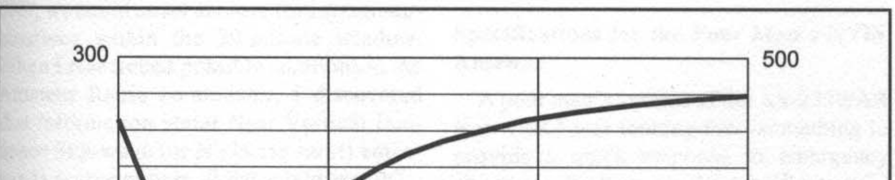

Fig 8—Relative gain and base reactance to resonate antenna versus number of radial and umbrella wires.

(no radial wires, but perfect electrical conductivity). Recall that this antenna system is resonant at 1910 kHz—in fact it was this factor that decided the antenna dimensions for the case study modeled. You could use even smaller antenna systems, with a corresponding loss in radiation efficiency and antenna bandwidth (to be discussed).

Notice that increasing the number of radials and number of umbrella wires from 4 to 16 increases the gain, and decreases the reactance of the loading coil required to resonate the antenna—and hence increases the antenna system bandwidth—since the antenna system loaded Q-factor (which equals X_a / R_a for an antenna system operated at frequencies below the resonant frequency) decreases.

The antenna system Q-factors for the case of the 4-, 8- and 16-wire antenna systems for the case of average ground are 88, 36 and 11 respectively. However, as the base reactance to tune increases, the loss resistance in the coil needed to match increases, and the Q-factor for the tuned antenna system is less than the Q-factor of the antenna alone. The bandwidth (BW) of an antenna (according to *NEC-4D*) with 4-, 8- and 16-radial and umbrella wires is 32, 23 and 23 kHz. The operational bandwidth for the conjugately matched antenna system (for narrow-band antennas) will be greater, by a factor of about 1.5.

CONCLUDING REMARKS

I have described design technology and operational characteristics for an umbrella top-loaded antenna system with insulated elevated radials. This system has a number of unique features:

1) The antenna can be electrically small; eg, a tower height 9 m or 0.06 λ at 1900 kHz.
2) It uses only a few elevated radials, compared with conventional multi-wire buried radial systems, which can also be electrically short.
3) The tower itself is configured to effectively place a low-loss inductance at the top of the tower. This decreases the resonant frequency of the antenna system and increases the effect of the top loading (the current on the part of the tower that radiates can be almost constant).
4) 4) The radiation efficiency can be high (–1 dB compared with a resonant umbrella antenna over a PEC ground), but the bandwidth (as expected for an efficient electrically small antenna) is small (operational BW < 50 kHz).
5) Finally, from the point of view of the antenna modeler, this antenna system is an interesting one to numerically model, particularly the tower (a lattice tower), configured in the manner described.

The shorted-line concept for a solid or braided shielded coaxial line involves currents flowing on the inside and outer surface of the shield. A lattice tower simulates the coaxial line, but our numerical model employs an even sparser grid to simulate the lattice tower. The concept of differing currents on an inner surface and outer surface is not applicable. Currents flow on the lattice structure, and on the wires in our numerical model. Does this simulate a shorted line inductance? The author used *NEC-4D* (double precision), and fortunately NEC does seem to model such an antenna system rather well indeed. Changing the length of the shorted line changes the characteristics of the antenna system, exactly like we'd expect.

ACKNOWLEDGMENT

The author works for The Communications Research Centre Canada, Ottawa, ON. He acknowledges the opportunity to use instrumentation and computing facilities and a forum for discussion not normally available to the average amateur in radio.

REFERENCES

[1] Belrose, J.S., "Folded Umbrella Top Loaded Vertical Antenna", Ham Radio, September 1982, pp. 12-17.

[2] Bob Eldridge, VE7BS is a top-band enthusiast. He uses (for 160 m) an elevated half-diamond (GP-type) loop, with two elevated radial wires pointing in the direction of New Zealand, see Belrose, J.S., "Loops for 80-Meter DX", *QEX*, August 1997, pp. 3-16.

[3] Smith, C.E., "Short Low Loss AM Antenna", IEEE Trans. On Broadcasting, **35**, June 1989, pp. 237-240.

[4] Belrose, J.S., "Umbrella Top Loaded Antennas: Base Fed, Folded, and with a Tuned Insulated Counterpoise", Conference Proceedings, 15th Annual Review of Progress in Applied Computational Electromagnetics, Naval Post Graduate School, Monterey, CA, 15-20 March 1999, pp 463-467.

[5] Belrose, J.S., "Radiation Characteristics of an Electrically Small MF Broadcast Antenna – By Simulation", IEE Eleventh International Conference on Antennas and Propagation, Conf. Pub. No. 480 Volume 1, April 2001, pp 90-94.

A Poor Man's Portable Emergency NVIS Antenna System

By W. Stanley (Stan) Edwards, WA4DYD
556 Beth Court
Lilburn, GA 30047

WA4DYD describes a replacement for the AS-2259/GR military antenna system.

While I served as the engineering officer in an Air National Guard Combat Communications Squadron, we always had trouble with HF communications in the 50- to 300-mile range. Working with a *Quick Reaction Package* required having initial communications up within 30 minutes after arriving on site. Whips never worked very well due to their low radiation angle.

The solution to achieving good communications was putting up two masts with an inverted L to achieve a high radiation angle. Even with the number of highly trained personnel assigned to the package, however, we could never achieve initial communications within the 30-minute window. When I researched possible solutions in the Amateur Radio community, I discovered that information about Near Vertical Incidence Sky-wave (or NVIS for short) antennas is scarce at best. What might we do?

The AS-2259/GR Antenna

After some research, we found some information on the military's AS-2259/GR antenna. This antenna is specifically designed to radiate low-frequency HF pretty much straight up. We ordered one and tested it. Finally, we had an antenna that worked on the lower frequencies and provided reliable communications after quick set-up!

Information about the concepts for NVIS operation can be found in a US Army document available at Internet URL **http://www.adtdl.army.mil/cgi-bin/atdl.dll/fm/24-18/FM24-_22.htm**. This is Appendix M from Army Field Manual 24-18, *TACTICAL SINGLE-CHANNEL RADIO COMMUNICATIONS TECHNIQUES* (a very good general reference). Information about a commercial version of the antenna manufactured by Telex can be found at **http://www.telexwireless.com/1990.pdf**. This is Telex's Model 1990 antenna.

Amateurs supporting emergency communications experience the same problems. When using HF within a state, the same distances of 50 to 300 miles typically apply. Propagation requires using the 75 and 40-meter bands for reliable communications.

Specifications for the Poor Man's NVIS Antenna

A poor man's version of the AS-2259/AR was what I was looking for—something to provide a quick response to emergency situations. So here are the specifications:

- I wanted this to be easily set up by one individual in less than fifteen minutes, or by two people in five minutes. (This is the specification of the manufacturer of the commercial antenna and is something we've proven in the field.)
- I decided it was okay to use an antenna tuner. This adds to the complexity of the system, but not unduly.
- A primary consideration is that the antenna must be compact and lightweight. I settled on having it fit in a 36-inch space.
- And of course, it had to be cheap to build!

The Design

The poor man's NVIS antenna consists of two crossed dipoles, fed at the top of a 15-foot PVC sectioned mast. The radiating elements are 38-foot long elements for one dipole and 25-foot long elements for the other. These are extended to a total length of 45 feet on each of the four elements using nylon cord and also serve as the guys for the PVC mast. It is best if the antenna tuner is located at the bottom of the mast. Don't forget to drive a ground rod at the base to provide a proper ground.

You can buy all the parts except for coaxial cable and fittings, dogbone insulators and solder lugs at a well-stocked hardware store. Most hams will probably have the other needed items in their normal junkbox stockpile. Make sure you get stainless-steel metal components for longest life. You may also prefer braided antenna wire for the radiating elements.

I made the mast of 1½-inch Schedule-40 PVC pipe and fittings. In this example I decided on a maximum length per element of 36 inches. Nylon rope cleats were mounted on the top section to wrap the elements around to keep the package neat (a technique used on the commercial version). This is shown in **Fig 1**.

I used a 1½-inch PVC cap on top to seal the top and through which the four eyebolts are placed to attach the radiating elements. Each eyebolt is equipped with two nuts, with a solder lug between the nuts for good electrical contact to the radiating element. On the inside of the cap, a similar arrangement is used to attach the feed line. A close-up picture of the inside before cementing it in place on the top is shown in **Fig 2**. The coaxial cable is extended down to the end of the top section and uses a barrel connector to allow connection of the rest of the feed line between the radiating elements and the antenna tuner at the base of the mast. Any coaxial cable will do, preferably a larger

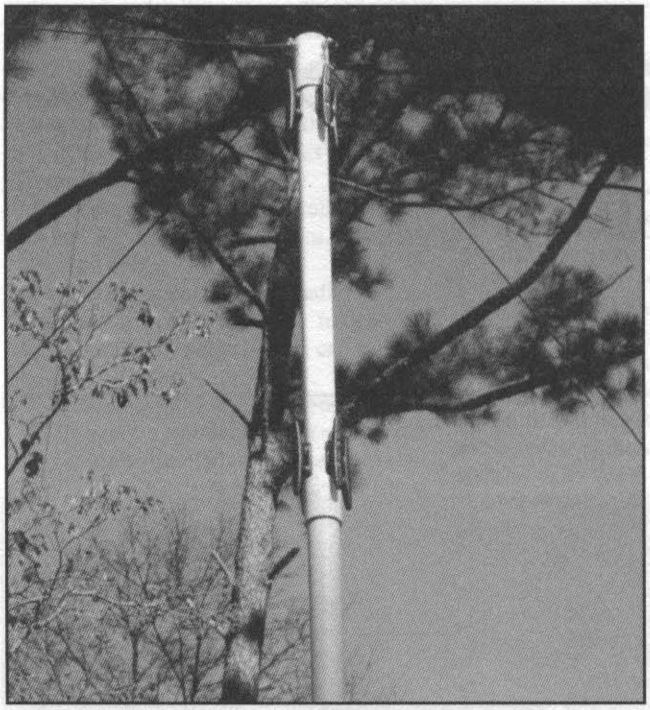

Fig 1—Top section: Notice the rope cleats used to secure the antenna elements when the antenna is packed for storage and transport.

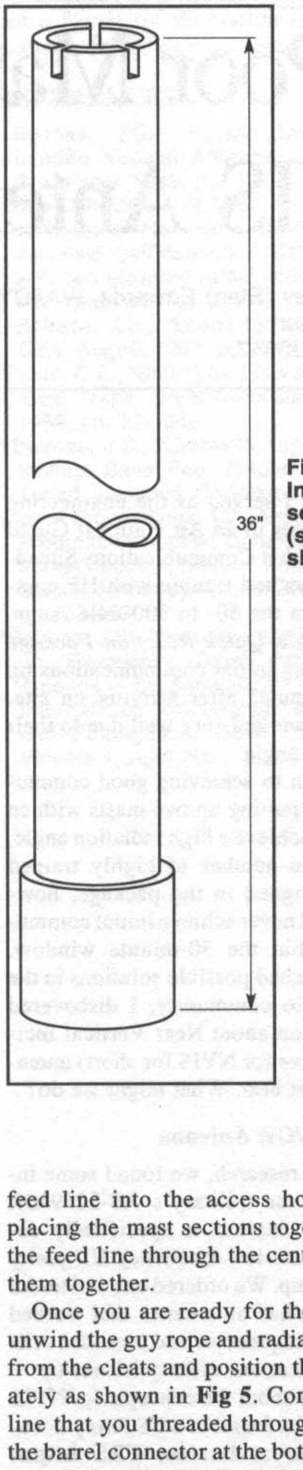

Fig 3—Intermediate section (showing slots).

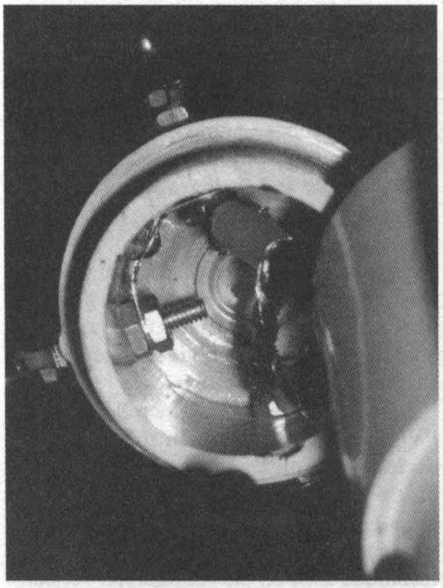

Fig 2—Top cap with feed line attached.

diameter cable such as RG-8 or RG-11.

Each intermediate PVC section is 36 inches long, including the coupling used to connect the five sections and base swivel. Each piece of PVC is slightly shorter than 36 inches. The coupling is cemented to only one end of each section. A dry coupling slips into another section very tightly, so three equally spaced slots were cut in the ends of the pipe sections to reduce binding when joining the sections. These slots are the depth of the hacksaw blade used to cut the slots. See **Fig 3**.

I designed the base to allow one person to walk the antenna up, taking the untethered mast to the proper position to secure it. The swivel base was the most difficult piece to construct. You can probably come up with your own scheme, but **Fig 4** shows the approach I took. I used a 3-inch water-closet flange for the base, with a short piece of 3-inch Schedule-40 PVC pipe with the sides milled out to provide the lower part of the swivel.

To this I added an upside-down 2-inch cap, with a 2-inch to 1½-inch adapter and a short piece of 1½ inch PVC pipe to serve as the moving part of the swivel. (The 1½ pipe goes into the bottom of the lowest 1½-inch mast section when the mast is assembled.)

I drilled a hole into the side of the short section of 1½ inch PVC pipe to allow the coaxial feed cable to exit from the center and connect to the antenna tuner. A 3/8 × 4½-inch bolt was used to provide the swivel. I placed 3/8-inch washers between the bottom cap and the insides of the 3-inch PVC pipe to act as a simple bearing. The bolt is secured using two 3/8-inch nuts, with a split washer between to lock them in place.

Assembling the Antenna and Walking It Up

To set up the antenna, decide where the base of the antenna will be located. Make sure you have adequate height clearance for the radiating elements. The area required is approximately 61 feet by 61 feet. Once you position the center swivel, aligned to allow the mast sections to be assembled and raised, secure it with four long metal tent stakes. Insert the antenna tuner end of the feed line into the access hole and begin placing the mast sections together, feeding the feed line through the center as you put them together.

Once you are ready for the top section, unwind the guy rope and radiating elements from the cleats and position them appropriately as shown in **Fig 5**. Connect the feed line that you threaded through the mast to the barrel connector at the bottom of the top section and slip the top on the mast top section. Secure three of the elements using tent stakes. You may want to mark the distance to the stake position on the elements with colored tape. This makes it easier to position the stakes for a single-person walk up.

You are now ready to walk the mast up. Once vertical, take the free radiator/guy element out and secure it. You are now ready to drive the ground rod and connect the antenna tuner.

Here's a useful tip on how to use a farm-equipment jack to remove ground rods. You

Fig 4—The swivel base.

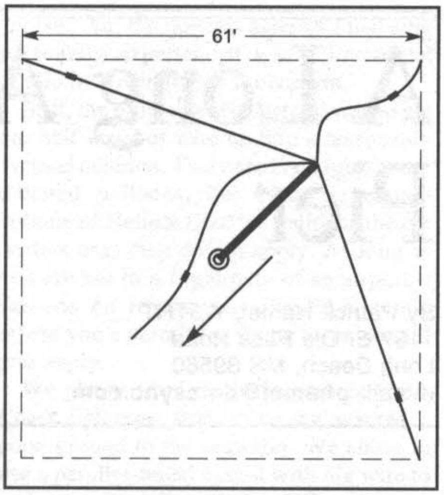

Fig 5—Top view of installation: Ready to raise mast in direction of arrow. Once mast is vertical, walk free end, keeping taut, out and secure with a stake.

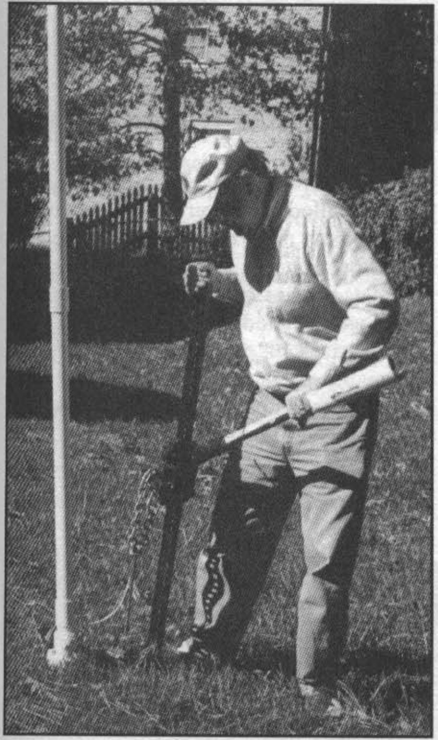

Fig 6—Ground rod removal.

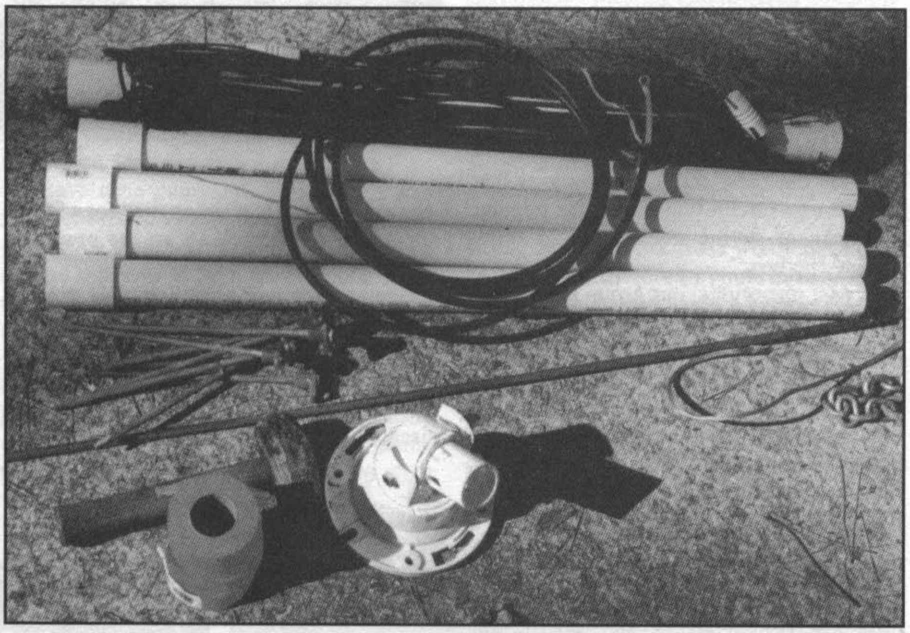

Fig 7—Complete antenna kit, ready for storage.

first place a short loop of chain under the ground-wire clamp before driving it into the ground (see **Fig 6**). This way you never have to finish driving a rod down and leave it, having to buy a new ground rod each time you operate in a remote location!

Fig 7 shows the entire antenna, with all its parts. Notice the chain loop on the ground rod. Also, make sure the antenna is well flagged so people moving around it don't trip over the stretched out elements or walk into an energized antenna. The elements are hard to see during the day, to say nothing of when it's dark.

Summary

This antenna is designed for quick response to emergencies that require HF communications in the 50- to 300-mile range. It's quick to put up and take down with minimum effort. It is lightweight and takes very little storage space. And it costs a lot less than its commercial counterpart.

A Long Antenna on a Long Pier

By Patrick Hamel, W5THT
1157 E. Old Pass Road
Long Beach, MS 39560
e-mail: **phamel@datasync.com**

W5THT has long dreamed of a bone-crushing signal on Topband. He tells the story of how he and a bunch of friends set out to put up a nifty skyhook, all in the name of science, of course.

Almost all hams have dreamed of an ultimate antenna, on any band. On a city lot here on the hurricane-prone coast of the Gulf of Mexico, antennas are necessarily limited both by finances and real estate. The usual method for a ham wanting to play with large antennas is to build a permanent "contest-grade station." Needless to say, this always involves a large number of dollars.

A few of us interested in trying out large antenna arrays have tried using temporary wire antennas on "free" real estate. We try to take advantage of our location next to the Gulf to do our experimenting. There is no reason why hams anywhere in the country can't do the same thing in situations that fit their own circumstances. As the popular management saying goes, "Try to think outside the box."

In past operations, our group has used a nearby Boy Scout facility and a private dock successfully. Some club members even discovered that there was a newly abandoned bridge in Brooklyn, Mississippi, and we spent a Saturday loading up "the Brooklyn Bridge"—with poor radio results but lots of fun, including a visit by the local Sheriff. But that's another story.

Sittin' at the Dock of the Bay…

Our latest saltwater dock expedition was officially conducted by the Mississippi Coast Amateur Radio Association. Actually this operation involved just a few of us, but the club officers agreed to let us use the paid-up club liability insurance policy. The stated reason for our experiment was "To attempt to determine if the D layer was ionized all day and all night during this sunspot peak."

We planned to borrow an advertising balloon from a local car dealer to support the end of a 160-meter half-wave vertical antenna over salt water. This was to be located a quarter mile south of the beach—that is, over saltwater off a long pier—in an area out of the airport traffic pattern. This was to be an "early training run" for a future attempt at the first WAS on the proposed 136-kHz band.

One of the minor objectives was to learn how to successfully set up a balloon-supported antenna and grounding system. Borrowing the balloon was easy after we found a Toyota dealer who had not yet discarded his balloon. Just in case you didn't know, a balloon tears very easily. In a car lot full of pointy materials of all sorts they tend to get lots of holes. Sooner or later the duct tape gets too heavy for them to fly!

A local "School and Party Store" had several sizes of rental helium bottles for reasonable prices. We also picked up a spool of #16 stranded insulated wire at a hamfest for the budget-busting sum of $2.00.

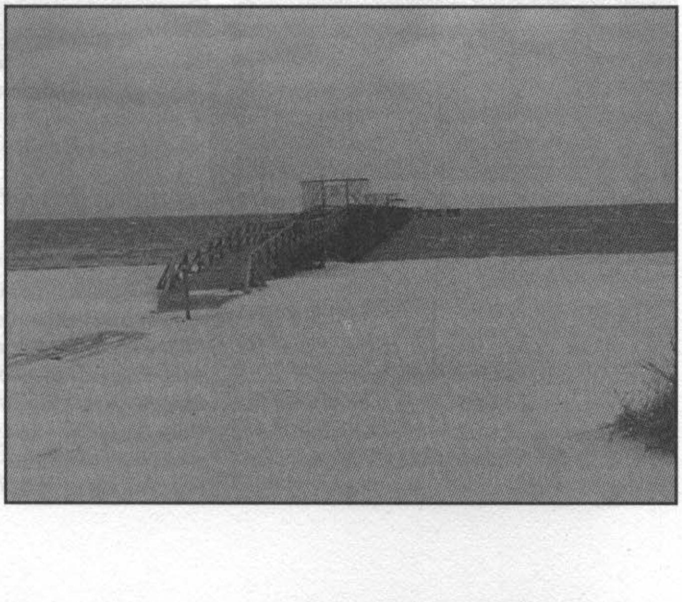

Fig 1—The "borrowed" pier: no power, no lights and a quarter-mile walk to the end. Everything had to be hefted over the sand just to get to the pier.

Fig 2—Moving the generator down the pier, full of enthusiasm and anticipation of saltwater DXing!

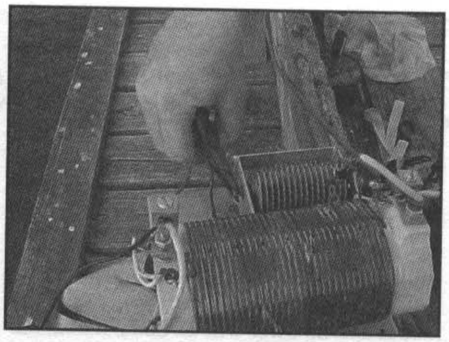

Fig 3—All you need to tune a half-wave antenna is a parallel-tuned circuit, a good ground and an antenna analyzer. (Don't try adjusting a tuner with a transmitter, unless you have a well-insulated knob.)

Every outing needs a place, and the best ones are in private hands, so with insurance policy number and our stated objective in hand, we wrote to the Penthouse Condominiums in Pass Christian, MS, for permission to use their 1650-foot long pier. This brings us to Lesson 1.

Lesson 1—Be careful what you ask for; you may get it! It is a long walk to the end of the pier (actually, many long walks). **Fig 1** is a photograph of our quarter-mile long pier. Note how heavy items (like the generator) had to be dragged across a good expanse of sand before getting onto the wooden pier itself. **Fig 2** shows two stalwarts moving the generator onto the pier.

I will also comment that a two-wheel dolly bounces a lot moving over the pier boards, so everything needs to be well packed. Strong young hams are needed to move equipment that far, but the tradeoff is that they want free food.

Lesson 2—The day you schedule something will be the day the drought finally breaks. This must be another one of the less-famous corollaries of Murphy's Law. Even when the rain didn't get us directly, nearby thunderstorms made things interesting.

We chose our expedition at the peak of Solar Cycle 23, so we also brought along a 20-meter station with a vertical. This station worked Europe continuously for six straight hours with only 100 W.

Since August in the southern US is the worst possible time to work 160 meters because of electrical noise from said thunderstorms, we planned on "beaconing," even if nobody answered. We hoped we could get reports back over the Internet.

Lesson 3—The Internet can get the word out to the whole world in a week, but more notice is needed to find people with enough interest to listen and report. We had twelve Internet replies showing interest in helping. Thank you again, everybody who listened and reported back to us.

Lesson 4—Old men can't stay up all night, and young hams don't do CW. We can still have a lot of fun playing radio, however!

Lesson 5—An end-fed half wave will work, even if only 12 feet high—if it is over a low-loss saltwater ground. During the hour it took to fetch and rig a vertical "skyhook," we ran 255 feet of insulated antenna wire on the wooden handrail back toward the beach. This was about 12 feet above the water, and we kept the power down to 40 W. We still managed to work Georgia, North Carolina, Maryland, and nearby Hattiesburg, MS, with S5 signal reports on 160 meters.

I have used many antennas since I was first licensed in 1956, but I had never taken notice that there was always something else around that was as high as, or higher than, the antenna (such as trees and houses). I suspect that my relative lack of success with vertical antennas stems from my locating them too near such obstacles. Out on the pier we had no such problems with nearby structures. I have also heard that some people disliked verticals because they were "noisy," but the noisiest antenna I had ever personally experienced was a horizontal dipole in a Minnesota snowstorm.

Still, the objective we pursued was to get our half wave of wire up into a reasonably vertical position. There are FAA rules about tethered balloons, but below a certain volume of Helium (like the balloons the car dealers use) they do not apply. As long as you are not in a flight path of an airport, I can see no reason why the FAA would refuse you a permit for flying an antenna if you apply.

We planned to be safe from those Gulf-Coast lightning storms, so we wanted a good ground to the seawater. We chose to use a parallel-tuned circuit with big wire to make a complete path for DC to ground before launching the antenna. See **Fig 3**. The method of grounding was to get a 10-foot roll of 8-inch aluminum flashing material, drill quarter-inch holes in two adjacent corners, and bolt four parallel pieces of wire to each one.

Four ground wires were for the 20-meter station and the other four for the 160-meter parallel-tuned matching circuit. Then we unrolled the flashing and lowered it into the water. After it sank, the two sets of wires entered the water separately. Using different bolts for the two station connections was useful to help prevent interaction between stations. **Fig 4** shows W5THT and KA5JVQ at the 20-meter operating position.

After a lot of agonizing, we finally gave up on launching the balloon because of the strong inshore wind. This would have torn up the balloon before we could have inflated it. So we ended up using a plastic kite we had also brought along.

This wind would also have stopped us from cooking supper. However, we used the generator and an electric crock pot to heat the beans and rice, rather than trying to use a finicky gas camp stove. See **Fig 5**. Note

Fig 4—The 20-meter operating position, manned by W5THT (left) and KA5JVQ. The 20-meter vertical is lashed to the back of a bench. Tape flags on the ends of the radials are to warn people of their presence. The 20-meter station worked Europe continuously, until the old men gave up for lack of sleep.

Fig 5—We tied the generator down to keep it from vibrating itself off the pier. The crock pot provided a steady load for the generator and good chow for the operating crew. W5ACS is a good camp cook.

that we had to tie down the generator so it didn't try to vibrate itself off the pier into the water.

We had attached a replacement fluorescent tube from a battery camping lamp to the end of the antenna to assist in locating it. It blinked satisfactorily and allowed us to locate the dancing kite after it got dark.

To stop the wire dipping into the water (sending the SWR up and turning the fluorescent light off), we kept about half the antenna still strung along the pier handrail when it got dark. Our final configuration was a half-wave long sloper with the high end to the north-northeast.

Lesson 6—A child's kite is *not* a really good idea. It is not made for heavy lifting in heavy winds. With the antenna sloping more or less upward and towards the northeast we made three more contacts and lost some others. We called CQ for six hours.

When the antenna was on the rail we had S3 noise with S7 signals. When the antenna end was elevated to about 30 feet, we had a solid 20 dB over S9 roar, with signals buried inside. To say that we were "alligators" (all mouth and no ears) was an understatement.

The 20-meter station was still working Europe when the old men gave out, so we all packed up and went home. At least we could say for sure that a vertically polarized 20-meter antenna located directly over saltwater played very well indeed!

The answer to the receiving noise problem on 160 meters will hopefully be the "Double-Dipping-Flyswatter Loop" I am now working on. But that's another story.

Conclusions

As I stated earlier, be careful what you ask for, since you may get it. Our mini-expedition to a long pier was a lot of work, but we had fun, in the truest tradition of Amateur Radio.

Your radio club probably pays liability insurance for its repeater and maybe for a hamfest. The policy probably covers all "club-sponsored" activities. If you can get permission to use the policy and the club name, you can probably get permission to do almost anything non-destructive.

Find a reason (such as "Investigating the Sunspot Cycle") that will allow a club administrator to say "Yes," because he/she can claim the organization contributed to science at no cost and received good publicity as a result.

Here are some other possible scenarios you might consider for a mini-expedition:

- Could that "small lake" near you support an anchored aluminum rowboat flying a balloon antenna?
- Could you find enough coax and empty bleach-bottle floats to stay "RF-safely" on the dock?
- How about that snow-covered baseball or football field with the high light towers 200 yards apart? Could you shoot a line over them for a "Sterba Curtain Propagation Experiment" that just happens to coincide with a contest weekend?
- Want to work Moonbounce? Some ropes thrown over tall light stands could support a wire-frame broadband horn antenna 100 feet long. Something that long would work on all bands above 6 meters. The 100-foot long rope-ladder Quagi in March 1995 *QST* would become practical. Sandbags could anchor the feed point and change the aim as the moon moves.

Out on the long pier, we had a lot of fun and learned some lessons. I hope to see your write-up after you have a similar sort of adventure.

A 160-Meter Mobile Resonator

By Martin A. Stewart, KA7QOR
PO Box 512
Deming, WA 98244

Here's a *really* large 160-meter resonator system for your Topband mobile station!

Home brewing mobile resonators is a facet of ham radio that I really enjoy. Considering the material and labor costs involved, I do not really save any money on antennas for HF mobile, but I do have fun!

The cost for the few commercially available 160-meter resonators, however, makes this construction project more cost effective. I cannot claim that I've made any great DX contacts with this antenna, but I am surprised by how well it receives.

The Basic Idea

The resonator system consists of a large series base-loading coil and a small shunt matching coil. A standard 102-inch stainless-steel whip goes into the top of the series base-loading coil and is the radiator.

The loading coil has 135 turns of #18 insulated wire, wound on a PVC form that is 10$^{3}/_{4}$ inches long and 2$^{15}/_{16}$ inches in diameter. This results in approximately 345 µH of loading inductance. The matching coil is 12 turns of #12 insulated wire on a PVC coil form that is 4 inches long and 2$^{7}/_{16}$ inches in diameter, yielding about 4 µH of inductance.

Construction

See **Table 1** for a list of materials you'll need. Throughout this discussion, refer to **Fig 1**, a drawing of the overall assembly.

Drill a $^{3}/_{8}$-inch hole in the center of each 2$^{1}/_{2}$-inch PVC end cap. Place one end cap on the end of the 2-foot long 2$^{1}/_{2}$-inch pipe, but do not seal it yet. Make a mark on the pipe about $^{1}/_{4}$ inch from the lip of the end cap then remove the cap.

Examine the cross-sectional diagram of the coil in **Fig 2**, showing the details of how you will secure the wire loops. Drill the first set of three small holes in the coil form, to fit the #18 insulated wire, parallel to a cross-section of the pipe and level with your mark. Space the holes about $^{1}/_{4}$ inch apart. Make another mark 10$^{3}/_{4}$ inches along the pipe length from the first mark, but do not drill here yet. Feed one end of the wire through the three holes, as shown in Fig 2, and leave about 6 inches of wire inside the coil form.

Now begin winding the wire tightly onto the coil form by rotating the coil form with one hand and tensioning the wire with the other. Use close spacing so that adjacent turns are touching. I recommend that you not try counting turns as you are winding because it's easy to get confused while you're trying to keep things rolling smoothly. Wind the wire until you reach the second mark and secure the wire temporarily to the form with tape.

Count the number of turns. If you do not have 135 turns, then add or remove turn as necessary. Cut off the excess wire, leaving about 6 inches of wire for a lead. Mark on the pipe where you will want to drill your next holes.

Now, you can let go of the coil and allow it to unwrap if you like. Drill your second set of three holes at the finished end of your coil. Tightly rewind your coil and feed the free end of wire through the first of the three new holes. Cut off the excess length of coil-form pipe, matching the length at the starting end of the form and taking care not to cut your wire.

Using needle nose pliers, reach into the end of the pipe and pull the excess wire tight as you feed it into the second hole. Also pull the wire tight as you feed it through the third hole. Now you need to put lugs on the ends of the coil wires, but you must provide a service loop on each end so you can put things together.

Hold an end cap at an angle against the end of the pipe to help estimate how long to cut your wire leads to provide this service loop before you glue the end caps on. The gap you leave between the cap and the form must be big enough for you to reach in with your fingers to connect the wire lug to the bolt in the end cap. Don't forget that you'll also need room for a socket to reach the bolt. Finally, add an extra inch before cutting the wire. Trim both ends of wire and solder a $^{3}/_{8}$-inch wire eyelet onto the end of each of the wires. Apply petroleum jelly to the eyelets (to protect the electrical connection surface).

Again, examine Fig 1 and assemble the 3/8-inch×24 tpi bolts, washers, lugs with attached wires and nuts to the bottom and top end caps. (When purchasing your bolts you should buy the correct lengths, depending on how you will mount the finished antenna.) Tighten both nuts and bolts at each end of the coil form.

Table 1

Parts for the 160-Meter Resonator

2 feet of 2$^{1}/_{2}$-inch ID PVC pipe (2$^{7}/_{8}$-inch OD)
2 each PVC 2$^{1}/_{2}$-inch end caps
110 feet of #18 insulated wire, solid or stranded, see text.
10 feet of #12 insulated wire (see text).
1 foot of 2-inch ID PVC pipe (2$^{3}/_{8}$ inches OD)
1 each stainless-steel whip, 102 inches long, RadioShack 21-903
2 each $^{3}/_{8}$-inch×24 tpi bolts
2 each $^{3}/_{8}$-inch×24 tpi nuts
1 each $^{3}/_{8}$-inch×24 tpi coupling, 1½ long
4 each $^{3}/_{8}$-inch flat washers
2 each $^{3}/_{8}$-inch lockwashers
3 each $^{3}/_{8}$-inch lugs for wire ends
1 each solder lug for bottom end of matching coil
Silicone sealer ("Marine Goop" recommended)

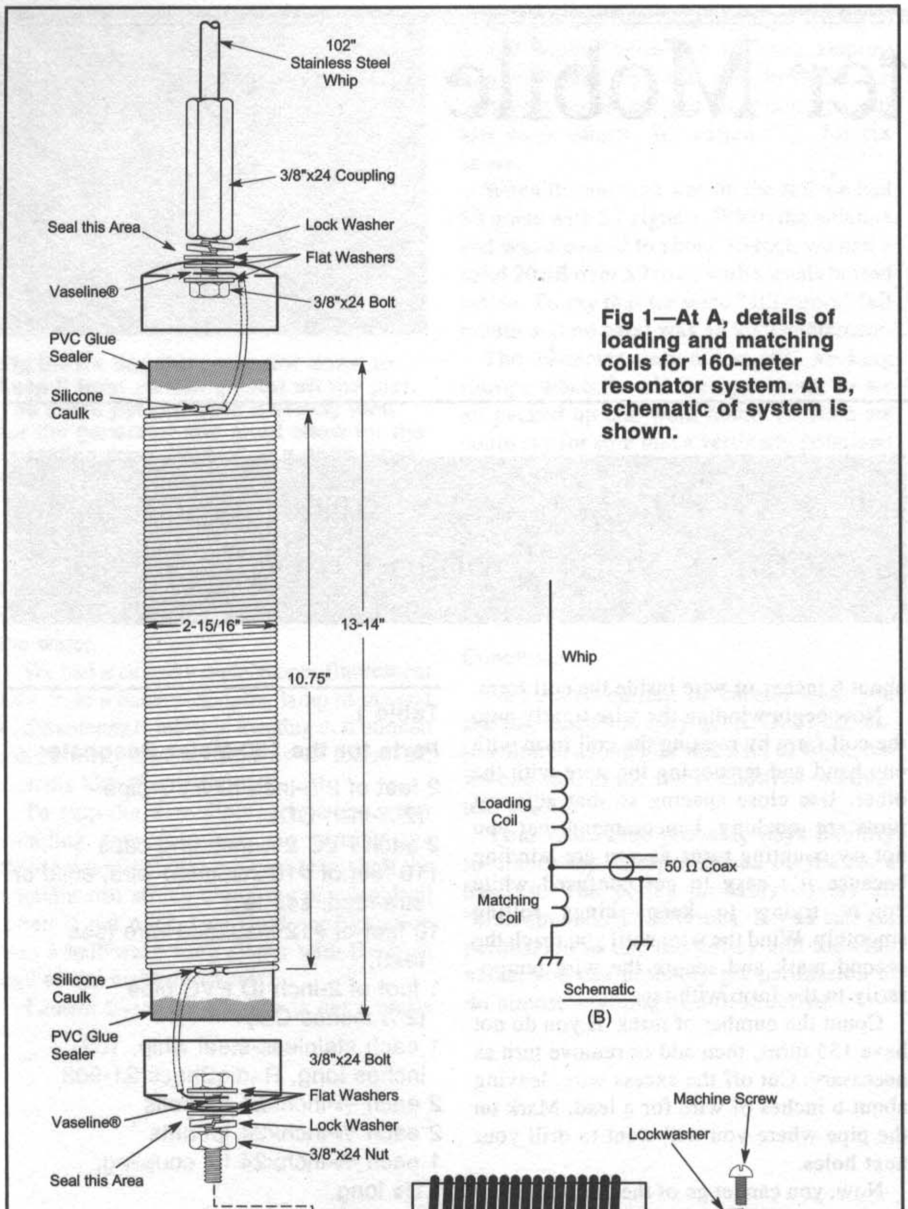

Fig 1—At A, details of loading and matching coils for 160-meter resonator system. At B, schematic of system is shown.

Apply PVC sealing compound to the top end of the pipe and push the end caps onto the ends of the pipe. Apply silicone sealer to the ends of the coil wire filling in the three small wire holes at each end. This completes assembly and weather sealing of the loading coil.

For the matching coil, I use the silicone sealer to glue my coil turns in place. The matching coil does not need to be sealed or enclosed. You will also use wire lugs soldered to the ends of the matching coil wires, but don't finish the wire ends until you are ready to attach/mount it to your antenna.

Additional Comments

Make sure you solder all electrical connections including the coaxial-cable leads and apply petroleum jelly to all other connections. I have not noticed any difference using solid or stranded wire for my coils. In this project I used solid wire for the loading coil and stranded wire for the matching coil. I have also used insulated wire for both coils. It allows easy winding and spacing of the turns and insulates the turns from each other.

Tuning

After you finish constructing your coil, I recommend using a low-power antenna analyzer to determine the exact resonant frequency of your system. I observed large changes in resonant frequency when I made small changes to the length of the stainless-steel whip, so I don't recommend changing the operating frequency by cutting the whip itself. Instead, I suggest that you change the number of turns on the loading coil to tune your system. You could even use coil taps with an alligator-clip lead to change between your favorite operating frequencies.

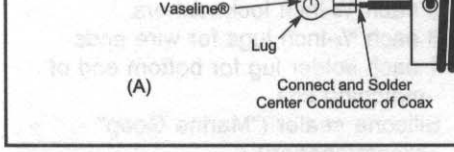

Fig 2—Cross-sectional view of loading-coil form, showing installation of wire through three small holes at each end of the form.

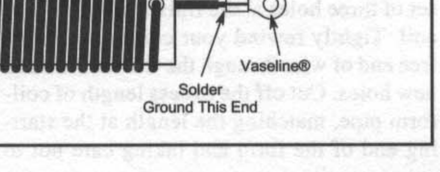

Fig 3—KA7QOR's car, with 160-meter resonator system mounted on front bumper.

Fig 4—Close-up view of KA7QOR's 160-meter resonator system. The matching coil is located below the base-loading coil.

Horizontally Extended Inverted-L and Flattop Vertical Antennas

By Thomas Kuehl, AC7A
620 S. Avenida Princesa
Tucson, AZ 85748

AC7A thoroughly analyzes several popular Topband antennas.

Since most of my actual operating time takes place on 160 meters, I am always interested in ideas about improving the performance of the simple low-band antennas many of us use on Topband. Many low-band operators are faced with limited yard space and/or the lack of tall supports necessary for high-performance antennas. Therefore, reality dictates a compact antenna solution.

Two common antennas often employed on 160 and 80 meters are the inverted L and the flattop vertical. See **Fig 1**. Both of them have appeared in many ham magazine articles and in the handbooks, so most low-band operators are already generally familiar with them. They are usually designed such that the combined vertical and horizontal wire lengths result in quarter-wave ($\lambda/4$) resonance. When compared to full-sized vertical or horizontal antennas (such as a quarter-wave vertical or half-wave dipole) they require less real estate and/or support height.

A typical 160-meter inverted L only requires a horizontal span of about 85 feet when the vertical section is 50 feet tall. This reduction in size is attained at the cost of lower radiation efficiency and reduced bandwidth. However, and more importantly, these antennas do provide a means for getting on the air with a reasonably good antenna. It is not unusual for these antennas to provide intercontinental DX contacts at the 100-W power level.

Many articles have been written about the inverted-L antenna, with some using antenna lengths greater than a $\lambda/4$.[1,2] Often suggested is a length of $3\lambda/8$, but others have been designed around lengths of $5\lambda/16$ and $\lambda/2$.[3,4] Doug DeMaw (SK), W1FB, mentioned his $5\lambda/8$ inverted-L antenna in an article about a preamplifier for loop and Beverage antennas.[5]

Antenna lengths of about 165 to 185 feet are commonly suggested for 160-meter inverted-L antennas.[6] This equates to a length of about $5\lambda/16$ to $3\lambda/8$. With a length longer than $\lambda/4$, the antenna's radiation resistance R_R increases, and this decreases the effect of ground losses.[7] A $5\lambda/16$ length also provides a close match to a 50-Ω feed line, with nothing more than a series-matching capacitor inserted at the feed point to tune out the inductive reactance.

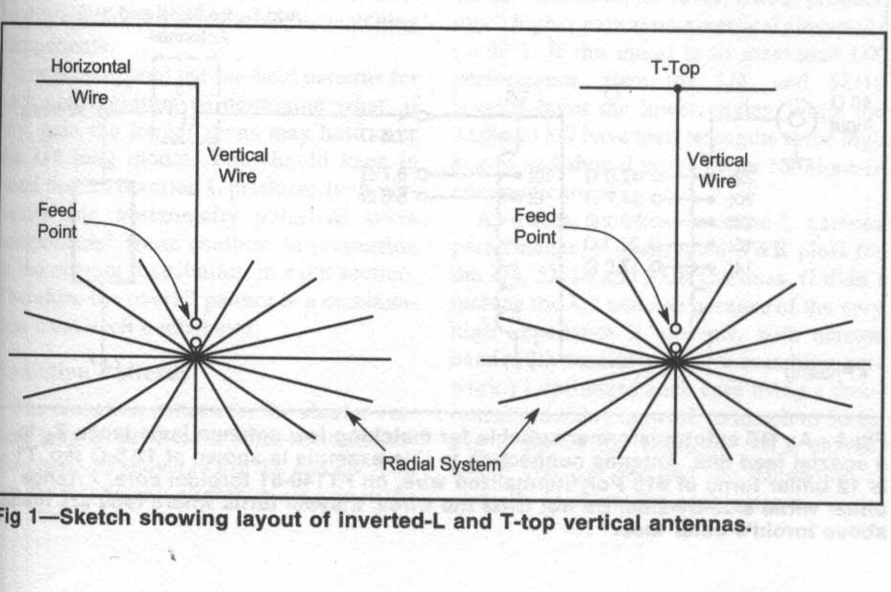

Fig 1—Sketch showing layout of inverted-L and T-top vertical antennas.

For a $\lambda/4$ inverted L the current maximum occurs at the base of the antenna. Moving the current maximum higher up, away from lossy earth, improves radiation efficiency. This also gets the current maximum further away from energy absorbing objects in the near-field environment. Any improvement in signal strength attained by these measures may be difficult to accurately assess by simple means, however. But that is where modeling comes in handy, allowing us to evaluate the affects of such changes on the antenna's far-field performance. I have evaluated both the inverted L and the flattop vertical, for different fractional wavelengths, using *EZNEC 3.0*.

THE HORIZONTALLY EXTENDED INVERTED L

Fig 2 provides the model dimensions for a 1.8-MHz inverted L, which has a 50-foot vertical section. Fig 2 also shows additional horizontal sections, which comprise lengths greater than a quarter-wavelength: $5\lambda/16$, $3\lambda/8$ and $\lambda/2$. I established some basic rules for all the models so that apples-to-apples comparisons could be made. I used an "average ground" with a conductivity of 0.005 S/m and a dielectric constant of 13.

The ground-return system consisted of 16 taper-segmented radials, each a quarter wavelength long and equally spaced around the antenna's base. This is less effective than a very good system consisting of 60 or more radials. I decided on using this simple ground model because it qualifies as a

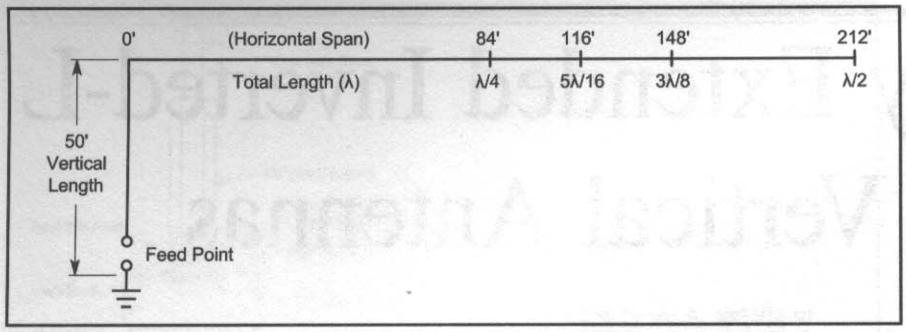

Fig 2—Inverted-L antenna, showing horizontal extensions beyond λ/4 length. (Drawing not to scale.)

compromise between what you might use on a small urban lot and what you may have out on the Ponderosa Ranch.

I modeled all wires with lossless #14 wire. Although it is a simple matter to include wire loss, doing so makes it difficult to determine what portions of the antenna resistance R_A are due to the radiation resistance (R_R) or the loss resistance (R_L). Adding the wire loss into the models produces about a –0.5 dB reduction in their far-field gains.

EZNEC 3.0, which utilizes an *NEC-2* engine, does not allow for the radials to be buried in or to sit directly on the earth. Therefore, I located the radials used in the models a few inches above earth. I suspect this limitation produces a little more optimistic far-field gain than would be had with a true buried-wire radial system. The more powerful professional version, *EZNEC/4*, uses the *NEC-4* engine, and this allows for the radials to be buried in the earth.

The total length of wire for the λ/4 inverted L can be approximated by the equation:

$$L\text{ (feet)} = 234 / F\text{ (MHz)} \qquad \text{(Eq 1)}$$

Using this a starting length for a frequency of 1.83 MHz, the total length should be 128 feet. With a vertical height of 50 feet, the horizontal wire span is then 78 feet. Simple enough, but using these values in the model I quickly found that the antenna is a little too short to achieve λ/4 resonance. This is indicated by the presence of capacitive reactance (–*j* X) in the antenna impedance, $Z_A = R_A \pm jX$. (R_A is the resistive portion of the antenna impedance, consisting of sum of radiation resistance R_R, and loss resistance R_L.) Incrementally increasing the horizontal span by a small amount renders a length of 134 feet, where the reactance drops to zero (*j* X = 0) so that the antenna is resonant.

Once I found the λ/4 resonant length, I could determine the λ/2 length, which is approximately twice the λ/4 length. Again, I iterated the horizontal wire length in small increments until the reactance dropped to zero.

The λ/2 to λ/4 ratio works out to almost exactly 2:1 (1.95:1) for each vertical height listed, and from that information I derived the $^5/_{16}$-λ and $^3/_8$-λ lengths using simple arithmetic proportions. Since both of these lengths are greater than a λ/4, but less than a λ/2, they result in the reactive part of Z_A being inductive (+*j* X). This is dealt with by using a series tuning capacitor.

Table 1 lists modeling results for inverted-L antennas with overall lengths of $^1/_4$ λ through $^1/_2$ λ, each with a vertical section that is 35, 50 or 65 feet tall. Somewhat of a surprise is that summing the vertical and horizontal sections for each fractional wavelength results in almost identical total physical lengths. For example, the λ/4 combinations produce overall lengths of 133.9, 134.1, and 134.0 feet, respectively. This allowed me to develop a general length equation, similar to Eq 1 above, for any of the combinations.

Also noteworthy is that the reactance component of Z_A for each $^5/_{16}$-λ and $^3/_8$-λ length holds quite constant for each length. This shows that the design is well behaved and predictable for different combinations of vertical and horizontal lengths.

The R_A portion of Z_A is lowest for the shortest vertical lengths, and rises as the vertical element's height is increased. This behavior is expected. The λ/4 inverted L has a low R_A, and would require impedance matching when being fed with a typical 50-Ω coaxial line. The $^5/_{16}$-λ and $^3/_8$-λ lengths also produce a relatively low R_A, plus the previously mentioned inductive reactive component (+*j* X). This reactance can be cancelled by inserting an opposite reactance in series with the antenna input—that is, a series capacitance (–*j* X). Once the reactance is cancelled, you can directly match the low R_A with a broadband RF autotransformer, placed between the antenna and the feed line.

Fig 3 shows an example of a suitable RF transformer. The taps allow the antenna's impedance to be transformed to a value near that of the transmission line, which is typically 50 Ω coax. Although other matching options exist, such as LC networks, the autotransformer approach does not reduce the antenna system's overall useable bandwidth.

For the 65-foot, $^3/_8$-λ example, the inductive reactance is +*j* 587 Ω. This is canceled by a series capacitive reactance of –*j* 587Ω. The capacitor's value is determined from:

$$C = \frac{1}{2\pi f X_C} \qquad \text{(Eq 2)}$$

where X_C is the capacitive reactance of –587 Ω.

A 148-pF (150 pF is a standard value) capacitor satisfies the example above. Although conventional transmitter-rated fixed, air or vacuum capacitors are desirable for this application, their cost and availability can be difficult issues to overcome. A suitable capacitor can be fashioned from an open-ended length of coaxial cable such as

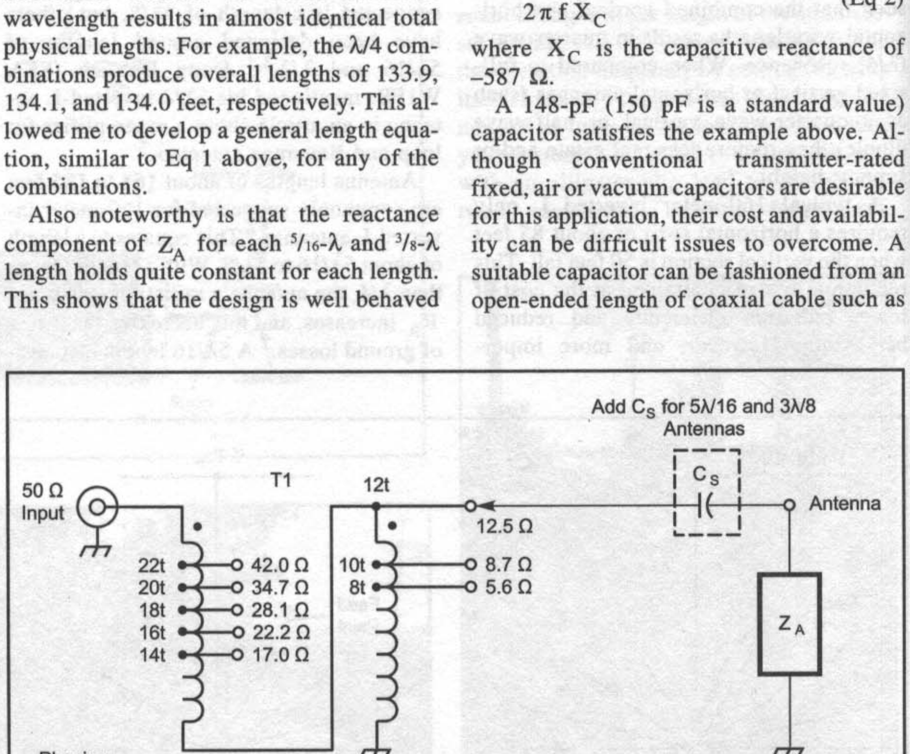

Fig 3—An RF autotransformer suitable for matching low antenna impedance Z_A to a coaxial feed line. Antenna connection in this example is shown at 12.5-Ω tap. T1 is 12 bifilar turns of #15 Polythermalized wire, on FT140-61 toroidal core. Arrange bifilar wires side-by-side. Do not twist the wires. Elevate turns where taps are made above toroid's outer face.

Table 1

Horizontally Extended Inverted-L Antenna, 1.83MHz, 16 - ¼ λ Long Segmented Radials

λ	*Vert. Height ft*	*Horiz. Length ft*	*Total Length ft*	Z_A *(Ideal)* $R_A \pm j X_A$ *Ω*	*Max. Gain dBi*	*Elev. for Max Gain, °*	*Gain @25° dBi*	*Gain @155° dBi*
¼	35	98.9	133.9	10.8 (7.7)	0.88	144	–1.31	0.64
	50	84.1	134.1	15.9 (13.6)	1.19	150	–0.21	1.12
	65	69.0	134.0	21.5 (19.8)	1.23	153	–0.88	1.21
5/16	35	131.9	166.9	18.3 + *j* 241.6	1.58	109	–2.06	0.17
	50	116.0	166.0	25.5 + *j* 241.4	1.43	135	–0.82	0.95
	65	101.5	166.5	34.0 + *j* 240.5	1.36	147	–0.14	1.22
3/8	35	163.2	198.2	44.1 + *j* 589.0	2.71	95	–3.19	–1.19
	50	148.0	198.0	55.9 + *j* 592.7	2.90	97	–1.84	0.08
	65	133.1	198.1	69.9 + *j* 587.0	2.19	105	–1.00	0.71
½	35	227.5	262.5	>10k	3.65	89	–5.96	–6.29
	50	211.8	261.8	>10k	5.09	90	–4.81	–4.27
	65	197.3	262.3	>10k	5.56	91	–4.02	–2.86

RG-214. This cable has a distributed capacitance of 30.8 pF/foot, requiring a length of approximately 4.8 feet. It is a good idea to start out with a longer length (≈10%), and then clip a little off the end of the cable until you achieve antenna resonance at your desired frequency. Such capacitors are capable of handling the full legal power limit, but they must be properly sealed at both ends to keep water out.

When the antenna's length is λ/2 the R_A potion of Z_A rises to a very high value—typically 10 kΩ or greater. Matching this high impedance to 50 Ω requires a more complex circuit than the simple autotransformer and series tuning reactance. Often a tapped, parallel-tuned circuit or other LC network is employed to transform the high impedance to 50 Ω. But be aware that this high impedance results in very high voltages when high power levels are used for transmitting. The peak voltages can easily exceed 5 kV at the highest allowable amateur power levels, and this must be thoroughly considered when selecting matching components.

I next compared the far-field patterns for each configuration to determine what, if any, gain the longer spans may hold over the λ/4 long model. You should keep in mind that an inverted L produces both vertically and horizontally polarized wave components. These combine in proportion to the current distribution in each section. Therefore the overall pattern is a combination from each contributor.

Radiation Patterns

The elevation pattern for the shorter vertical lengths produce a somewhat potato-like shape, as shown in **Fig 4A** and **4B**. You can see that there is slightly more gain in the opposite direction from that of the horizontal wire. **Fig 5** overlays the physical layout for a λ/4 inverted L with a 50-foot high vertical section together with the elevation pattern.

This pattern shape is maintained at λ/4 and 5λ/16, but attains a more circular shape as the overall length passes from 3λ/8 to λ/2. **Table 1** lists the maximum gain and the azimuth angle at which this occurs. Also listed is the gain at the feed point near end (elevation of 25°) and opposite far end (elevation of 155°). I used an angle of 25° as a reference for the near end, and 155° (180° – 25°) for the far end.

Short verticals situated over average ground often exhibit maximum gain near an elevation angle of 25°, making this a good angle for comparisons. Here the λ/4 antenna, followed by the 5λ/16, provides better gain at the lower angles than the longer antennas. This can readily be seen in Fig 4.

The λ/2 plot shows the lowest gain at the 25° elevation; however, it does produce much higher gain at near-vertical elevations (≈90°). If the intent is to maximize DX performance, then the λ/4, and 5λ/16 lengths favor the lower angles, while the 3λ/8 and λ/2 have their strengths at the high angles and should prove better for close-in communications.

As a final check of inverted-L antenna performance, I constructed SWR plots for the λ/4, 5λ/16 and 3λ/8 antennas. (I didn't include the λ/2 antenna because of the very high impedance it presents, with narrow bandwidth resulting from a matching network.) I optimized each case using a theoretical matching network to match to 50 Ω. **Fig 6** shows the resulting SWR curves, where you can see that the bandwidth is virtually identical for each antenna.

THE HORIZONTALLY EXTENDED FLATTOP VERTICAL

Fig 7 gives the dimensions for a λ/4 flattop vertical, and also the horizontal extensions for 5λ/16, 3λ/8 and λ/2 lengths. Modeling showed that little correspondence existed between the physical lengths of the λ/4 and λ/2 resonant antennas. Summing half the horizontal span with the vertical length, produced a λ/2 to λ/4 ratio of 2.7:1. This makes determining in-between wavelengths a little trickier. I used linear interpolation to equate the 5λ/16 and 3λ/8 lengths, and from the current distributions the lengths appear to be pretty close.

The performance of the antenna with 35, 50 and 65-foot vertical sections is tabulated in **Table 2**. Note that the flattop is a fundamentally different antenna than the inverted L, since its operation is that of a simple vertical. It does not produce any horizontally polarized radiation if made perfectly symmetrical. Equal and opposing horizontal wires provide capacitive loading, allowing the antenna to attain resonance at a height far less than that required for a full-size λ/4 vertical.[8] The far-field pattern is that of a vertical, having maximum gain at low angles and a deep overhead null. **Fig 8A** shows the far-field elevation patterns for each of the flattop antennas having a 50-foot vertical section.

Table 2 shows that extending the horizontal top wires so that the overall antenna lengths are 5λ/16 and 3λ/8 produces a somewhat higher R_A than that provided by the λ/4 antenna. And like the inverted L, the models present an inductive reactance (+*j* X) component in Z_A. Except for the case of the 3λ/8, 65-ft vertical section, the R_A portion of Z_A is too low for a direct match to 50 Ω. And here too the λ/2 antenna produces a very high feed-point impedance.

Notice that as the top wires are extended the angle for maximum gain increases for both the 5λ/16 and 3λ/8 antennas. There is also a slight gain increase at the 25° reference angle. The λ/2 antenna really produces an unusual elevation pattern. Like the shorter-wavelength flattops, it exhibits an overhead null, but the far-field intensity is maximum at much higher angles. You can see this in Fig 8A. Making the λ/2's vertical segment longer only enhances this behavior. Fig 8B, an azimuth plot comparison for the flattop antennas, shows that fairly deep nulls develop perpendicular to the horizontal wire. Inspection of these nulls, at the maximum gain elevation of 56°, shows their depth exceeding –20 dB. This is the result of the phase relationship between the currents in the two opposing wires. Instead of canceling each other out, as is the case for the shorter lengths, they actually become phase-aiding, producing the bi-directional pattern. Exactly what this high-angle null

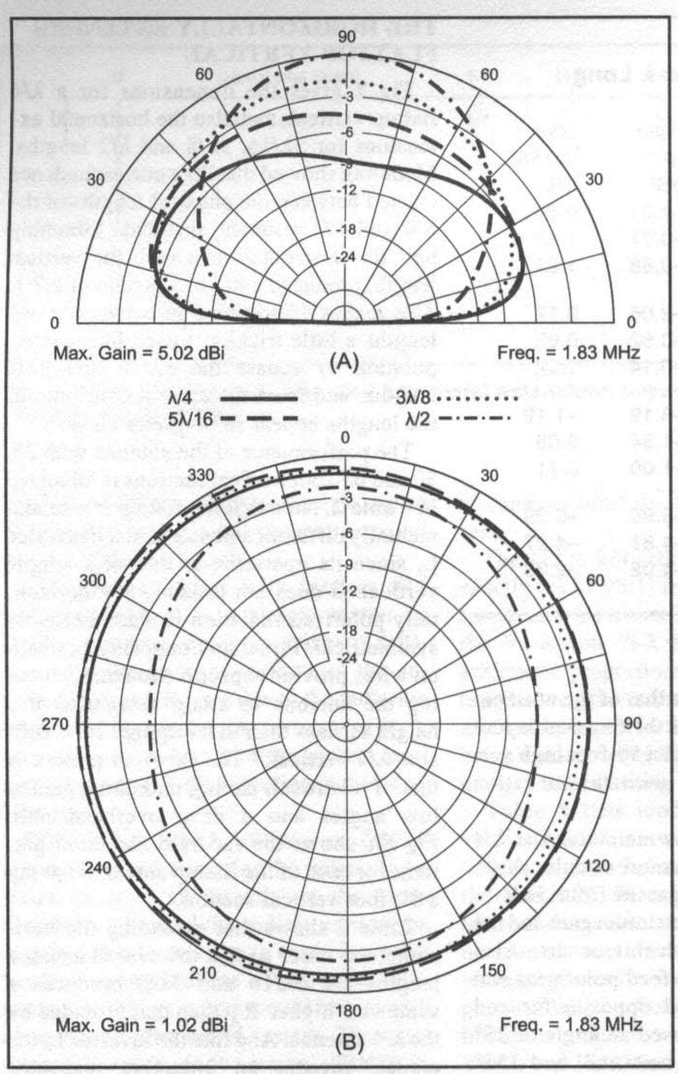

Fig 4—At A, elevation plot comparisons for four inverted-L antennas, using a 50-foot high vertical section. At B, azimuth plot comparisons for four inverted-L antennas, taken at an elevation angle of 25°.

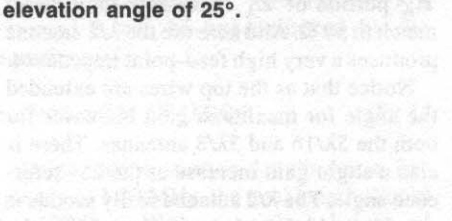

Fig 5—Layout of 160-meter inverted-L using 50-foot high vertical section. The elevation-plane pattern is overlaid on the physical layout. Note that maximum radiation is in the direction opposite the horizontal "L" portion.

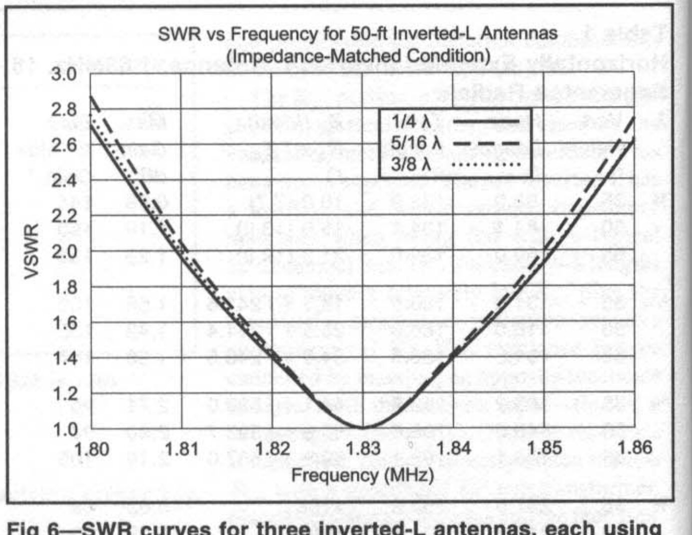

Fig 6—SWR curves for three inverted-L antennas, each using a 50-foot high vertical section.

might be useful for is left to the reader's imagination.

SWR curves for the λ/4, 5λ/16 and 3λ/8 flattop antennas are plotted together in **Fig 9**. Again, a perfect impedance-matching network is assumed. There is little difference in bandwidth between each of the antennas, with a slightly wider 2:1 SWR bandwidth being achieved by the shorter antennas.

CONCLUSIONS

I have compared the feed-point impedances, far-field patterns, gains and bandwidths for λ/4, 5λ/16, 3λ/8, and λ/2 inverted-L and flattop vertical antennas. As a general statement, there appears to be little if any reason for extending the total length to λ/2 for either antenna. The feed-point R_A is unmanageably high and the far-field pattern results in maximum gain at very high elevation angles. If your operating preferences require an antenna that favors high elevation angles, the common dipole provides a better solution. The λ/2 dipole produces a feed-point resistance that is close to 50 Ω (at a 50-foot height), a balanced feed point and a far-field pattern comparable to that of the λ/2 inverted L. However, the dipole's span is about 260 feet, which is somewhat more than that of the inverted L (212 feet).

The λ/4 inverted L produces its highest gain at the lowest elevation angle. And when tuned to resonance with a series capacitor, it

Table 2
Horizontally Extended Flattop, 1.83 MHz, 16 Segmented Radials, ¼ λ Long

λ	*Vert. Height ft*	*Horiz. /Side ft*	*Vert. + One Side ft*	*Total Horiz. ft*	*Z_A (Ideal) Ra ± j X_A Ω*	*Max. Gain dBi*	*Elev. Angle °*	*Gain @25° dBi*
¼	35	76.3	111.3	152.6	8.2 (6.5)	0.45	27	0.43
	50	58.5	108.5	117.0	13.8 (12.4)	0.80	26	0.80
	65	43.8	108.8	87.6	20.2 (18.9)	0.92	25	0.92
5/16	35	119.1	154.1	238.2	10.0 + *j* 188.2	1.01	32	0.87
	50	103.6	153.6	207.2	18.2 + *j* 240.5	1.19	29	1.13
	65	90.2	155.2	180.4	30.2 + *j* 302.1	1.16	27	1.14
3/8	35	162.0	197.0	324.0	17.9 + *j* 387.7	1.09	41	0.40
	50	148.7	198.7	297.4	29.2 + *j* 477.1	1.53	37	1.10
	65	136.5	201.5	273.0	48.5 + *j* 586.6	1.49	34	1.25
½	35	247.6	282.6	495.2	~10 k	1.39	56	–3.50
	50	238.9	288.9	477.8	~10 k	3.39	56	–1.69
	65	229.1	294.1	458.2	~10 k	4.34	56	–0.37

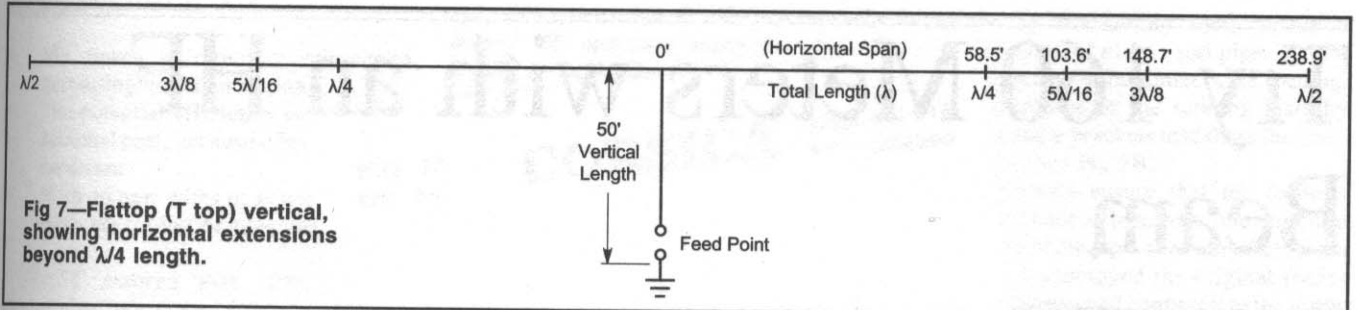

Fig 7—Flattop (T top) vertical, showing horizontal extensions beyond $\lambda/4$ length.

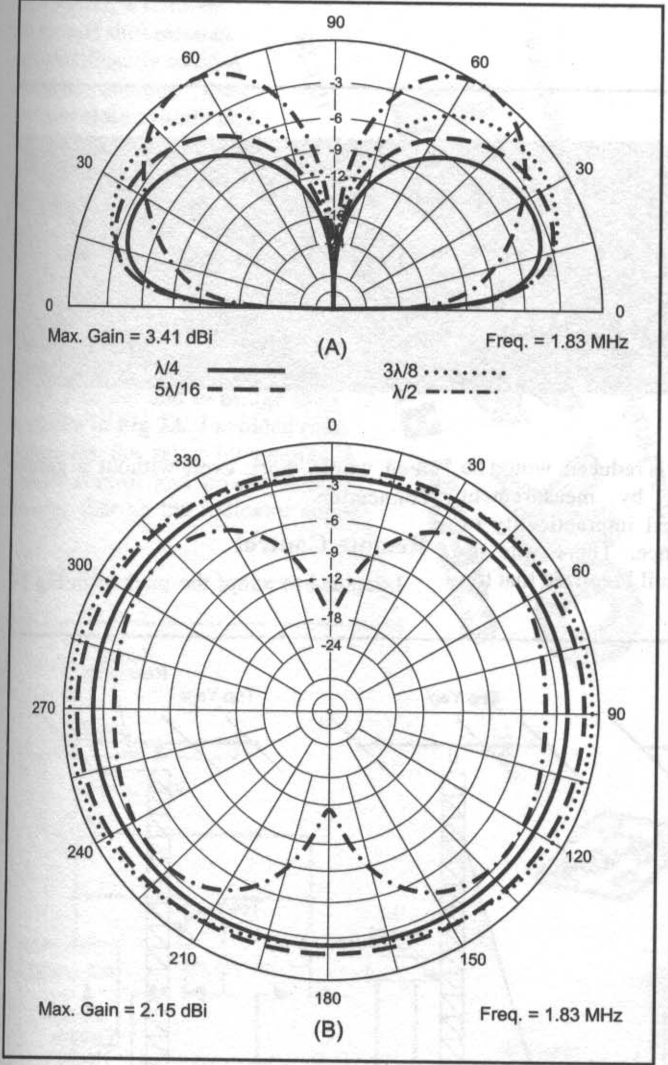

Fig 8—At A, elevation plot comparisons for flattop verticals, each using a 50-foot high vertical section. The $\lambda/4$ antenna produces the lowest set of upper lobes. At B, azimuth plot comparisons for the same antennas, at 25° elevation angle. Beyond a total length of $3\lambda/8$, the pattern begins to shrink inward perpendicular to the horizontal wire. The ½ λ antenna exhibits nulls perpendicular to the horizontal wire.

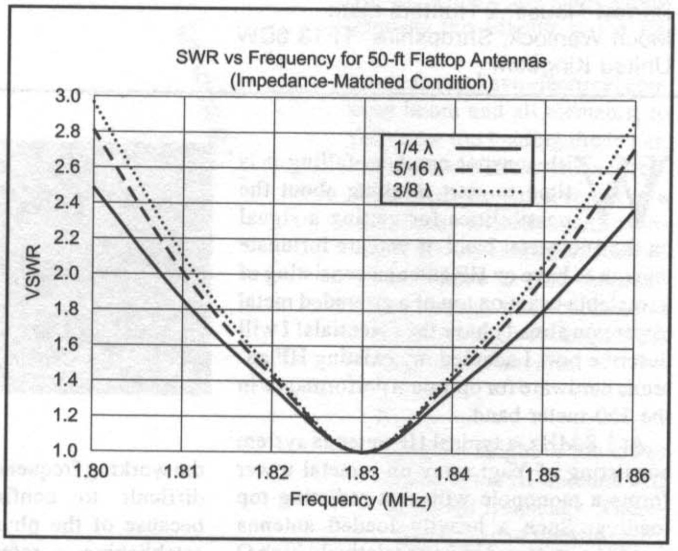

Fig 9—SWR curves for three T-top antennas, each using a 50-foot high vertical section.

requires nothing more than a simple autotransformer for impedance matching. The $5\lambda/16$ and $3\lambda/8$ antennas develop a little higher gain, but at the expense of slighter higher elevation angles. In reality, little difference would be noted in a signal originating from any of these three antennas. The gain patterns are quite similar and ionospheric conditions might favor one over the other at any given moment.

The flattop vertical requires very wide horizontal spans. For example, the 50-foot, $3\lambda/8$ flattop requires nearly 300 feet to accommodate the horizontal span, but this drops below 120 feet for the $\lambda/4$ version. The far-field plots for the $\lambda/4$, $5\lambda/16$, and $3\lambda/8$ antennas show nearly imperceptible differences between their patterns. In nearly all cases, except when the vertical segment is about $\lambda/8$ (65 feet) for the $3\lambda/8$, R_A is low and must be transformed to the feed-line impedance.

It appears that little additional gain can be expected from extending the horizontal portion of either the inverted-L or the flattop vertical beyond a total length of $\lambda/4$. Doing so provides the convenience of a feed-point R_A that is close to $50\ \Omega$, and the ability to easily tune the antenna at the feed point. If you can readily accommodate the additional length requirements over that of the $\lambda/4$, then a simple series capacitor is all you need to tune the antenna. These reasons alone may account for the popularity of inverted-L antennas longer than $\lambda/4$.

NOTES AND REFERENCES

[1] “1.8MHz Inverted L,” *The ARRL Handbook*, 76th Ed. (Newington: ARRL, 1999), p 20.27.

[2] J. F. Lindholm, W1XX, “The Inverted L Revisited,” *QST*, Jan 1983, pp 20-21.

[3] I. I. “Crash” Knorr, “Inverted L,” **www.geocities.com/ResearchTriangle/Lab/1635/skyhooks/ant-invertl.html**

[4] D. DeMaw, W1FB, “The 160-Meter Antenna Dilemma,” *QST*, Nov. 1990, p 30-32.

[5] D. DeMaw, W1FB, “Preamplifier for 80- and 160-M Loop and Beverage Antennas,” *QST*, Aug 1988, pp 22-24.

[6] R. Dean Straw, N6BV, Editor, “Inverted-L Antennas,” *The ARRL Antenna Book*, 19th Ed. (Newington: ARRL, 2000), p 6-29.

[7] “The AE6C Dual-Band Inverted-L An-tenna,” *The ARRL Handbook*, 76th Ed. (Newington: ARRL, 1999), p 20.27.

[8] Thomas Kuehl, AC7A, “A Close Look at the Flattop Vertical Antenna,” *The ARRL Antenna Compendium, Vol 6* (Newington: ARRL, 1999), pp 202-208.

Try 160 Meters with an HF Beam

By Tony Preedy, G3LNP
Barrow House, 2 Hunters Gate
Much Wenlock, Shropshire TF13 6BW
United Kingdom

> You may well ask yourself, "Gee, why didn't I think of that?" after reading this article!

With sunspot numbers falling it is time to start thinking about the possibilities for getting a signal on the 160-meter band. If you are fortunate enough to have an HF antenna consisting of a rotatable beam on top of a grounded metal tower you already have the essentials! I will describe how I adapted my existing HF antenna hardware for optimum performance in the 160-meter band.

At 1.8 MHz, a typical HF antenna system consisting of Yagi array on a metal tower forms a monopole with non-radiating top loading. Such a heavily loaded antenna would be expected to have relatively high Q and would not therefore cover the whole band (1.81 to 2 MHz in the UK) without re-tuning. **Fig 1** shows three ways to adapt such an HF antenna system to give a good match to a coaxial feeder on 160 meters:

1. Though generally impractical, we could try to drive the tower at the base through a tuning reactance. To shift resonance, we need to either vary the tuning reactance or change the height of the tower.
2. We could shunt feed the grounded tower through an outrigged conductor. One form of such a system is a gamma match. Though quite practicable this is essentially a fixed-height system, relying on the variable reactance for frequency shifts. I used to do this but found the outrigger wires to be a liability both while the tower was retracted and during elevation. My tower is a crank-up type of tower.
3. We could drive the tower at an intermediate point. The obvious place to do this is at the top, because it is relatively easy to insulate the HF antenna from the tower, above the rotator. Because of the resulting inaccessibility of the tuning reactance it is now difficult to shift frequency except by adjusting tower height.

Significantly, computer analysis shows the arrangement in Fig 1C is more efficient than the others when the ground connection resistance is finite. This phenomenon, which appears to become more beneficial as the working frequency is reduced, would be difficult to confirm by measurement because of the physical impracticality of establishing a reference. There was no obvious explanation until I realized that top feed would work even without a ground connection.

Remote Control

I decided to adopt the method in Fig 1C

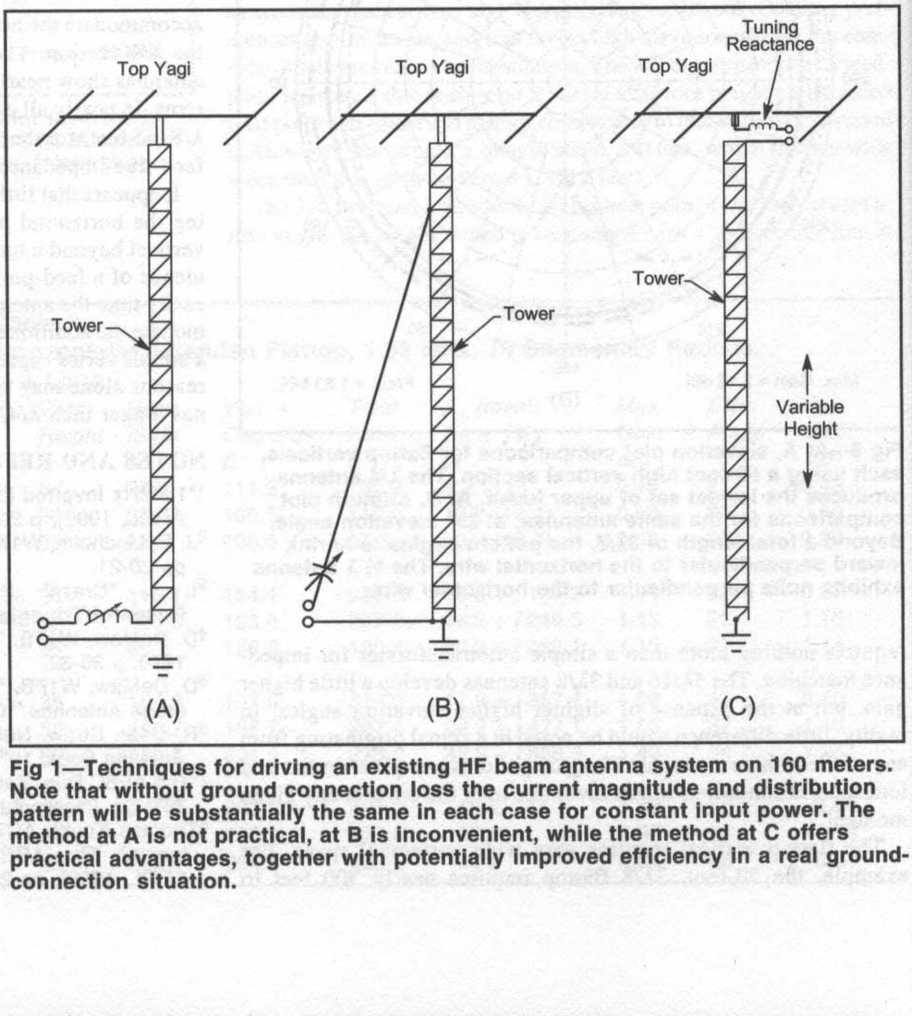

Fig 1—Techniques for driving an existing HF beam antenna system on 160 meters. Note that without ground connection loss the current magnitude and distribution pattern will be substantially the same in each case for constant input power. The method at A is not practical, at B is inconvenient, while the method at C offers practical advantages, together with potentially improved efficiency in a real ground-connection situation.

because:

- My tower is remotely telescoped, permitting armchair tuning
- The potential efficiency bonus
- Minimal cost, because of minimal new hardware
- With no new wires or structures, there were no zoning or planning implications.

ELNEC showed that after choosing the tuning reactance for resonance at 1.810 MHz, a reduction in height of a few feet would shift resonance up the band without significantly altering efficiency. In the finished antenna the indicated SWR remains close to unity on the 50-Ω feeder. I thought there might be obvious problems using this tuning method, but presumably because of the weight of the tower sections, I have not seen any evidence of intermittent electrical contacts during or after tuning adjustments.

To retain HF capability I use a relay to short out the 160-meter tuning reactance, to join inner and outer conductors of the antenna feeder and to bridge the insulator, as shown in **Fig 2A**. I avoided running new cables for the relay by tapping into the rotator control and power connector and thereby sharing the indicator supply voltage, in my case 24 V dc. This ensures normal HF operation using the original feeder, as soon as the rotator is switched on, and 160-meter operation using the same feeder with the rotator switched off.

Construction

The insulator was formed by parting the 2-inch diameter rotating-tube mast and inserting a section of "Tufnol" phenolic resin-bonded fabric rod, machined to fit tightly inside the tube. I obtained the rod from RS Components, stock number 771-443 (50 mm diameter by 1.17 meters long). See **http://www.rs-components.com/**.

I decided not to try clamping the boom of the Yagi antenna directly to the insulator because of the potential for the clamp to either damage the insulator or to slip. For safety the Tufnol was both through-bolted and fixed with epoxy adhesive.

A simpler method, which I have not tried, might be to use a sleeve of hard insulating material within the boom-to-mast clamp. Because the RF voltage at the feed point will always be relatively low at resonance it may be appropriate to substitute dry varnished hardwood for the relatively expensive Tufnol.

The 10-A open-type relay and tuning reactance (see below) are protected from the weather by assembling them inside a capped section of plastic soil pipe. I chose a round section to minimize wind loading. I fixed the pipe to the rotating mast by means of angle brackets that share the insulator bolts. See Fig 2B.

The brackets ensure that the feeder's outer conductor is bonded to the structure at each end of the pipe, above and below the insulator. I unplugged the original feeder from the antenna and connect it to the lower end of the adaptor, while a new short length of feeder connects the adaptor to the HF balun.

The HF antenna must have electrical continuity between boom and all elements, to be fully effective for top loading the tower. Usually this is ensured if the antenna incorporates a hairpin with grounded center or a gamma system. Some antennas with completely insulated driven elements, such as LPDAs, may still have a path between feeder and boom through their balun or at the longest element. A simple resistance test will confirm—if it is not obvious.

Performance

Either increasing the height of the tower or increasing the area of the HF antenna will reduce the self-resonant frequency. Therefore, depending on the size of the structure,

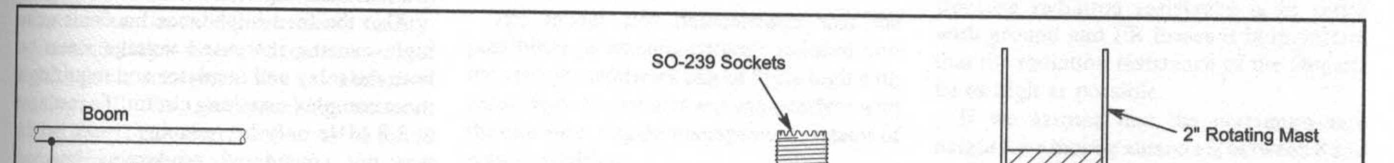

Fig 2—At A, the simple circuit used by G3LNP for top feeding an HF beam and tower combination on 160 meters. At B, assembly of the 160-meter adaptor unit. Refer to the text for component details.

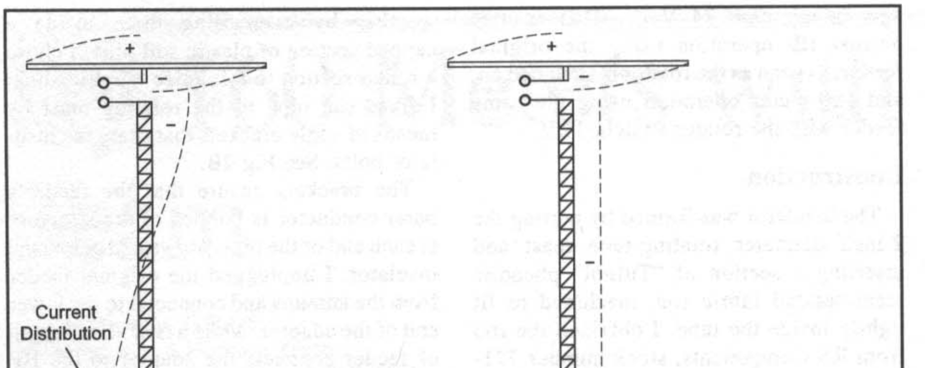

Fig 3—This shows how to use the top-feed technique on higher frequencies or where the structure may be too large for efficient operation. At A, the current distribution results in poor low-angle radiation because the structure is too large for the working frequency. At B, quarter wavelength radials are added to shift the ground connection up the tower, effectively shortening it and converting the antenna into an elevated ground plane type. Although the radials should ideally be horizontal, there is no significant deterioration in efficiency if they slope for termination close to the ground.

you will need either a capacitor or an inductor inside the adaptor for resonance at 1.8 MHz. As a guide: a system consisting of a typical 70-foot telescoping tower and a 4-element triband HF Yagi should be self resonant in the 160-meter band.

The earth connection resistance will influence the SWR at resonance because the top feed impedance will contain an enhanced transformation of total base resistance, consisting of all losses plus radiation resistance. Typically, you can expect a result close to 60 Ω (an SWR 1.2:1) in the example above when using several buried ground radials. For longer structures, a suitably rated capacitor will be required for resonance. Try a 1000-pF variable receiving type and substitute a fixed capacitor once you know what value is needed.

For shorter structures, an inductor will be necessary. My system consists of a 3-element HyGain 203BA antenna at 66 feet, mounted on a Versatower type P60 tower. I needed an inductor of 14 µH to shift self-resonance at maximum height from 2.22 MHz. to 1.9 MHz. I needed 18 µH for 1.85 MHz and 22 µH to shift to 1.81 MHz.

If you are prepared to accept a higher SWR on 160 meters, where feeder loss is usually minimal, or if you have a fixed tower, you may prefer to use a local ATU and either fix the tuning reactance for mid-band or omit it. However, the Q of my system was quite high at about 40. To illustrate the effect of fixed tuning: At maximum height with a 14 µH inductor the antenna is resonant at 1.9 MHz with VSWR of 1.2:1. SWR then rises to 4:1 at 1.8 MHz and 3:1 at 2.0 MHz.

The new antenna was impressive. Using an inverted-L reference that has a total length of 100 feet and a height of 45 feet, driven against the same ground system, showed the top-feed system to be one to two S points better on transatlantic and antipodean circuits. This was all the proof I needed that the adaptation was justified!

Here are some precautions to make if you want to avoid RF feedback and EMC problems with this antenna:

1) Dress the feeder and rotator cables away from the base of the tower. Bury them if possible.
2) Make sure the tower is properly grounded for lightning protection. This is also desirable for efficient radiation.
3) Connect the feeder braid to the ground connection at the base of the tower.
4) Either join the braid of a shielded rotator cable to the ground connection at the base of the tower or connect each rotator conductor to ground with individual 0.01 µF disc ceramic capacitors.

Other Bands

I tried the system on 75 and 40 meters to see if the top-feed technique can be used with typical tower/array systems on higher frequency bands, knowing that the radiation angle was likely to increase, causing apparent low efficiency. This is particularly so on 40 meters, where the antenna is more suitable for local contacts by near vertical incidence propagation.

75 meters was more attractive, although at full height there was no evidence that the top-fed tower was better than the inverted L. For example, with a 70-foot tower at 3.8 MHz, the current in the upper section is of opposite phase to that in the lower part, causing partial cancellation in the far field at low elevation angles, as illustrated in **Fig 3A**.

Also the feed impedance becomes quite high, causing increased voltage stress on both the relay and insulator and requiring a more complex matching circuit. To resonate at 3.8 MHz only by reducing tower height was not considered productive because the radiating section was negligible and the tower sections did not make reliable contact when nearly retracted.

There is a way around these problems. Connect a set of two or more quarter wave (at the higher frequency) elevated radials at a point part way up the tower, ideally an eighth of a wavelength below the top, but more practicably at the top of the non telescoping section. See Fig 3B. This makes the antenna into an elevated ground plane, in which the section of tower below the radials functions primarily as a support. As the number of elevated radials is increased, efficiency and feed impedance each become less dependent on ground connection loss.

Conclusion

I have tried various antenna arrangements on 160 meters, but I believe that top feed is the most elegant, the least intrusive and importantly the one that gets the best reports from my restricted site. As with any vertical antenna, performance on reception is dependent primarily on the level of local electrical noise and this one is no exception.

Computer Modeling the HF Mobile Antenna

Peter Dodd, G3LDO
37 The Ridings
East Preston
West Sussex BN16 2TW
UK
e-mail: **g3ldo@ukonline.co.uk**

G3LDO models, and then he measures, mobile antennas.

While researching a book on mobile Amateur Radio,[1] I investigated various aspects of mobile-antenna installation. In over 40 years of mobile operating I have tried mounting the antenna on every conceivable part of a vehicle but had not formed a clear picture of the best antenna-fixing point.

In an attempt to resolve the question, I considered a simple computer model based on one described by John Belrose, VE2CV.[2] In this article I will describe this model and how it was expanded to answer further questions. I made some attempt to verify the model. I will also describe measurements to ascertain that the model represents reality.

The modeling is restricted to conventional metal vehicle structures. The calculation of loading coil size and matching network design is not addressed here but can be found in the references. [2, 3, 4]

FIRST COMPUTER MODEL

This simple model was first used in[5] using *EZNEC3*[6] to look at the question posed above. The vehicle is modeled as a small van with a 9-foot long antenna mounted on its lower rear. The antenna was designed so that the coil was clear of the roof of the vehicle in accordance with general practice.

I originally had the impression that there would be a greater proportion of the signal radiated away from the vehicle due to a perceived *screening* effect on a rear-mounted antenna. However, in practice, the signal tended to have greater radiation in the direction of the vehicle relative to the antenna.

Closer examination of **Fig 1** shows why this is so. There is a fairly high current in the metal structure of the vehicle near the high-current section of the antenna element. It follows that when an antenna is radiated against the body of the vehicle, the vehicle itself becomes part of the antenna system.

I once witnessed an event that demonstrated the effect of RF current present in a vehicle structure. A BBC camera crew was filming my mobile operation (for a documentary on Amateur Radio) with the door of the vehicle open. RF attacked the audio system of the camera every time I transmitted, so the sound had to be recorded separately and dubbed.

The model also demonstrates that the possibility of antenna currents induced into the vehicle metalwork can be fairly high with some types of antennas and can interfere with the electronic engine-management systems of certain vehicles.

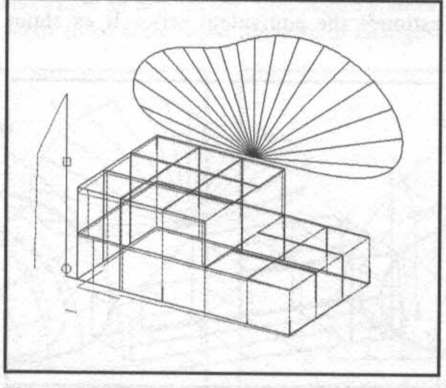

Fig 1—My first computer model of an HF mobile installation, with the antenna mounted at the rear of the vehicle. The circle represents the feed point and the square on the antenna is the loading coil. Also shown is the fore and aft elevation pattern of the antenna, which predicts a maximum gain of –1.9 dBi. The vehicle is represented by dark lines and the current by lighter-shade lines. The distance between the vehicle grid line and its associated current line is an indication of relative current magnitude.

FURTHER QUESTIONS

From Fig 1 it appears that the best place to fix the antenna is on the top of the vehicle. However, the radiation resistance of an antenna is proportional to its length. Because radiation resistance is in series with ground and I^2R losses it is important that the radiation resistance of the antenna be as high as possible.

If we assume that the maximum safe height for a mobile antenna is between 8 and 10 feet we have the situation where, if a roof mounted antenna is used, then the height of the vehicle must be deducted from the length of the antenna. This results in a short antenna with a relatively low radiation resistance. If we use an antenna mounted low on the vehicle, such as on a tow bar, then a longer antenna can be used, with a theoretical larger radiation resistance. In fact, a full quarter wave can be used on the 28 MHz band. A series of questions arises:

- Which of these two solutions gives the best compromise?
- How does the size of the vehicle affect HF antenna performance?
- If you want to work HF DX from a mobile station, where is the best place to drive or park the vehicle?

Chris Page, G4BUE, says, "I did a lot of SSB mobile work in the 1970s when I lived at Saltdean (a few miles east of Brighton). During my mobile operating whilst driving to and from work in Brighton each day along the coast, I had some quite spectacular results using an FT101 (100 W). As soon as I turned inland away from the coast, even for just a few hundred yards, both transmitted and received signals went down quite noticeably. Over the space of three evenings on 80 metre SSB, I worked five of the six continents... I traveled in both directions along the coast many times in the course of my work and I always used the coast road, rather than the parallel (faster) freeway located at least 5 miles inland. I always got much better signal reports on the coast road."

Alan Birch, G4NXG, has worked over 327 countries from his car. Most of this operation was from a fixed site and Alan reports that his mobile station shows improved performance when operated close to the sea. Fixed /M operation also means you can use an antenna that would normally be impractical when driving at speed. [If you are using a large antenna but are still able to drive the vehicle then this is /M operation. This would even apply if you were using a kite or balloon to support the antenna. If you are operating from a vehicle with a long wire antenna tied to a tree, or a fixed mast, then in the UK, you would sign /P.—*G3LDO*.]

More questions arise:

- Can this "sea effect" be modeled?
- Just how effective is such a setup?
- Is it possible to use two verticals to make a beam antenna for fixed /M operating?
- Is it possible to make a lower-frequency mobile antenna for NVIS operation?
- I operate mobile on a bicycle. Is a mobile antenna used in this way inferior to a conventional vehicle installation? Will I get improved performance if I use my bicycle /M on the beach?

COMPUTER MODEL

I use a wire grid for simulating a solid conductive surface, such as a metal vehicle body. However, as the frequency is increased, computer analysis using Method of Moments (MoM) programs such as versions of NEC, runs into practical difficulties. The reason for this is that the current is assumed to be nearly constant in the each of wire segments in the many wires used to make the model. To get a relatively smooth change of current from one segment to the next requires a large number of segments and wires. More of these wires and segments are required as the frequency is increased, which in turn increases preparation and computing time.

The *EZNEC 3.0* implementation of *NEC-2* allows up to 500 segments and is a low-cost, easy-to-use piece of software. I used *EZNEC 3.0* for all the modeling described in this article.

The first task was to construct a wire model of my vehicle. This is shown in **Fig 2**. Once a model has been constructed you can alter the size using the frequency scaling facility. I will describe further details concerning the construction of the vehicle wire model later.

My present vehicle is a Renault Laguna Estate, which is 12.5 feet long, 4.8 feet wide and 4.8 feet high. The wire-grid model does not use the exact dimensions of my vehicle because I constructed the model from similar-sized rectangles (2 feet × 2.5 feet) for simplicity.

The model uses a total of 457 segments, which is well within the 500 segments allowed by *EZNEC 3.0*. The model was placed so that the base of the vehicle body was 0.5 foot above the ground. The *EZNEC* manual states that a High Accuracy (NEC Sommerfeld) ground is the most accurate for antennas with low horizontal wires. (The minimum height depends on several factors, but results should be good down to at least 0.005 wavelengths, or about 6 inches [15 cm] at 30 MHz.).

It was important to include all the losses in the computer model. The vehicle I^2R losses were included by using zinc (rather than copper) as a wire loss parameter. Usually there is a coating of such material on the metalwork of the vehicle to provide corrosion protection. Zinc was also used for the antenna element because the *Texas Bugcatcher*, in common with many commercial mobile antennas, is made of stainless steel. Mobile antennas are usually electrically short and use loading coils. W7EL has this to say about loading coils:[6]

"Loading coils frequently have a significant amount of loss which should be included in the model. Measurement is the best way of determining the loss, but even a guess may be adequate. Air-wound inductors typically have Q's in the range of 200 - 400 or so. This means that you can estimate the equivalent series R as about 1/200 to 1/400 the reactance. If using this range of values impacts your result, you might want to make a measurement or better estimate of the Q."

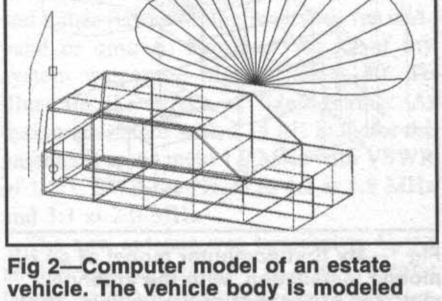

Fig 2—Computer model of an estate vehicle. The vehicle body is modeled using 112 wires, each wire having four segments. A small wire is attached to the lower rear of the model, representing a towbar antenna-mounting bracket (two segments). The structure is an enclosed cage and not an upside-down open box as shown in Fig 1. The antenna uses 7 segments, making a grand total of 457 segments to construct the model and the antenna.

The coil used with the Texas Bugcatcher test antenna is fairly high quality. I used a Q value of 400 in my model.

COMPUTER MODEL VERIFICATION.

Although computer modeling is now regularly used by both professionals and amateurs, I nevertheless felt that it would be useful to try to gain some verification by practical measurements. These measurements would include the measurement of field strength and feed impedance. If data from the measurements and the modeling were in approximate agreement, then I would have more confidence in the modeling technique.

The first objective was to measure the antenna feed impedance at various frequencies and antenna locations on the vehicle.

Impedance Measurements

I made these using a Hewlett-Packard HP4085A Vector Impedance meter, as shown in **Fig 3**. The test antenna was a Texas Bugcatcher, which has the advantage of having multi-band facility together with reasonable efficiency. For the roof-mounted measurements the antenna was mounted using a large three-magnet magmount. To head off any possibility of impedance changes due to the indirect (capacitive) coupling of the magmount to the vehicle, I used a small wire to link the frame of the magmount direct to the car

Fig 3—Impedance measurements of a mag-mounted Texas Bugcatcher, using a Hewlett-Packard HP4085A Vector-Impedance meter. I made the measurement with the test probe fixed directly at the base of the antenna—no feeder was used.

Fig 4—Field-strength measuring arrangement. Most of the antenna measurements were made using a mag-mounted Texas Bugcatcher, the same arrangement shown in Fig 3. Various items of test equipment were tried. In this photo I am using a test instrument known as Hetrodyne Voltmeter type 2002, made in Denmark. I placed this on a wooden mobile scaffolding used for building construction.

Table 1
Measured and *EZNEC* Calculated Feed Impedances.

*Antenna Resonance**	*Position on Vehicle*	*Measured Impedance* Ω	*Calculated Impedance* Ω
3.68 MHz	roof, rear	14	17.0
3.55 MHz	tow bar	13	12.2
7.1 MHz	roof, rear	17.5	16.2
7.02 MHz	tow bar	13	15.4
13.8 MHz	roof, rear	58	57
13.2 MHz	tow bar	21	18
30 MHz	roof, rear	82	85.3
26.8 MHz	tow bar	20	24

* I did not change the coil settings when I moved the antenna position, hence the change in measured impedance and resonant frequency.

body. Measurements were also taken of the same antenna mounted directly on the tow bar, using a suitably constructed antenna-base adapter.

On each band I connected the appropriate tap on the antenna coil and took the impedance measurements at resonance; ie, the test frequency was adjusted until the impedance phase angle was zero. The results of these measurements are shown in **Table 1**. I found a resonance around 16 MHz. This anomaly was not much affected by changes in antenna loading-coil inductance. I suspect that the reason for this strange resonance could possibly be a resonance in the vehicle itself.

I didn't massage these figures for this article. However, if I found a large discrepancy between the measured and calculated results, then I took a closer look at the model. For example, the initial results on 30 MHz gave a measured impedance of 82 Ω and a calculated value of 104 Ω. W7EL has this to say:

"A wire grid looks like a screen, with each side of each screen hole made from a wire. In general, the best implementation is for each side of each hole to be a single one-segment wire. Although wire grid modeling is an art in itself, a few general rules have evolved which give good results for most situations. One is that the size of the holes (that is, the wire spacing) shouldn't exceed about 0.1 wavelength. Some studies have indicated that a coarser structure is adequate far from the source, where current is lower. The same general rule should be followed here as for elsewhere in any model, that segmentation needs to be finer when the current changes rapidly from one segment to another. Another general practice is to make the surface area of the wires equal to the area of the surface being modeled. This requires larger diameter wires than normally used, but usually produces the best results."

To model the vehicle at higher HF frequencies required a change to the one shown in Fig 2. Ideally, the number of wires should be increased so that the spacing is less than 0.1 wavelength. I found that I could get away with the original vehicle model by increasing the wire thickness to around 3 inches while the antenna element remained at 0.5 inches! From Table 1 you can see that the calculated value was a more realistic value of 85 Ω. Increasing the model wire thickness to 4.5 inches resulted in a warning message regarding the length-to-diameter ratio of the wire. There was very little change in the radiation patterns between the thin-wire and thick-wire vehicle models.

Field Strength Measurements

Field-strength measurements were more of a challenge than measuring the impedance. I

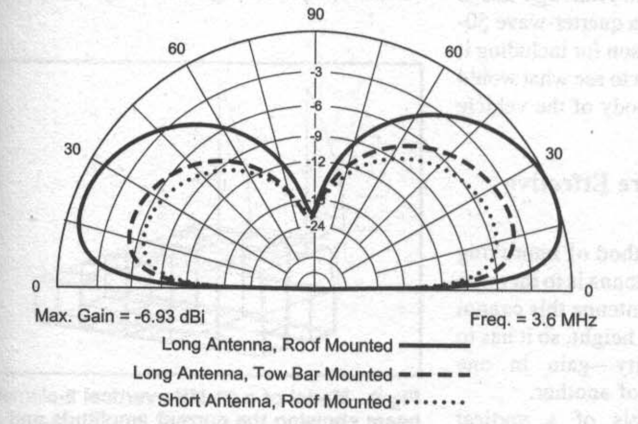

Fig 5—Comparisons between roof and towbar mounted antennas on the 80-meter band. The data shows very little difference between the short roof-mounted antenna and the traditional longer tow-bar mounted antenna. The roof-mounted antenna has a 5 dBi advantage but is not very practical for driving because of the overall height above ground. However, it is fine for fixed /M operating.

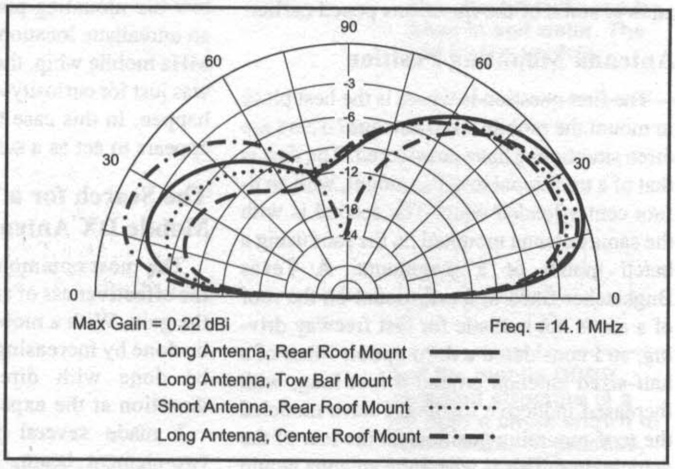

Fig 6—Comparisons between roof and tow-bar mounted antennas on the 20-meter band. In this case there is nothing much to be gained by having a larger antenna—The short roof-mounted antenna is the best compromise for DX operating while on the move. I modeled a center-roof mount as well, and it gave a more symmetrical pattern, as expected.

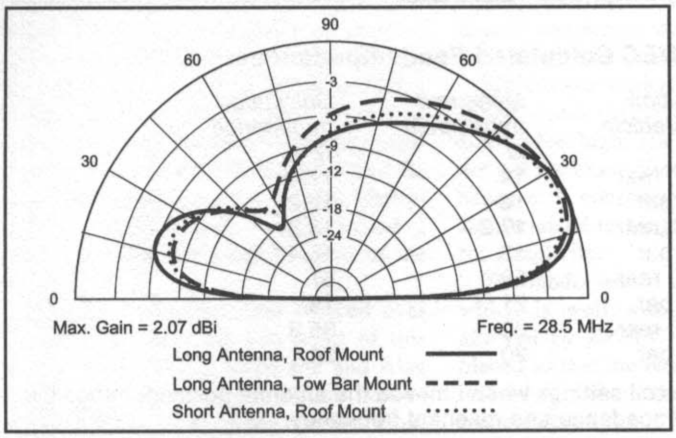

Fig 7—Comparisons between roof and tow-bar mounted antennas on the 10-meter band. The short roof-mounted antenna gives as much gain at low angles as the larger tow-bar mounted antenna.

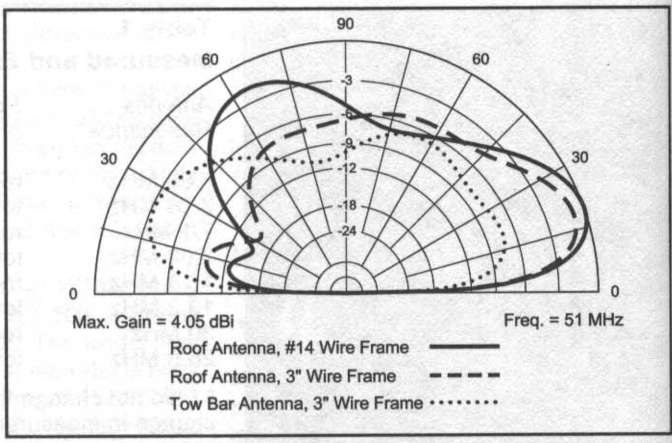

Fig 8—Model of a mobile antenna for 6 meters. The outer ring represents 4.05 dBi. The greatest gain is reported with a vehicle model made from #14 AWG wire frame, which has a calculated feed impedance of 118 Ω. The 3-inch thick wire-frame model shows reduced gain and a calculated feed point of 73 Ω, which is more realistic. The third trace is of a tow-bar mounted antenna. At this frequency the car body acts as an obstruction.

made most of my field-strength measurements around 29 MHz. The reason is that the higher the frequency, the closer is the near field/far field boundary. If you consider that the measurement needs to be made at least 10° above the horizon you can appreciate the difficulty. Of the various measurements done on 29 MHz with the rear-mounted antenna the average difference between the front and the rear strength levels was up to 6 dB, with maximum signal being emitted from the front of the vehicle.

I tried several mobile antennas during these tests, one of which was a modified CB Firestik; this turned out to be better than the Texas Bugcatcher by about 2 dB on 28 MHz. At 50 MHz the front-to-rear signal level ratio was around 12 dB; 6 dB greater than with the 11-m antenna.

USING THE MODEL

Having got all that out of the way, we can now proceed to use the model to try to answer some of the questions posed earlier.

Antenna Mounting Position

The first question is where is the best place to mount the mobile whip antenna? There are three situations I have considered. The first is that of a traditional tow-bar mount, with an 8-foot center-loaded whip. The second is with the same antenna mounted on the roof using a hatch mount or a magmount. A Texas Bugcatcher fixed to a magmount on the roof of a car is not realistic for fast freeway driving, so I considered a third option—that of a half-sized antenna around 4 feet long, with increased inductive loading. I have modeled the roof-mounting positions at the rear of the vehicle roof. This is where the antenna would be positioned in the case of a hatch mount or a tailgate mount.

The results are shown in **Fig 5** to **Fig 7**, where the operating frequency is 3.6, 14.2 and 28.5 MHz respectively. I assume the Q of the coil in the large antenna to be 400, and 200 for the smaller antenna. All the elevation images shown are viewed from the side of the vehicle with the front facing the right-hand side of the page.

I also modeled a 50-MHz mobile antenna. While measuring field strengths as part of the computer verification I noticed a more pronounced directional effect compared with the lower HF frequencies; consequently I extended my modeling to cover this band.

At 50 MHz the structure of the vehicle model becomes more critical. The model, shown in **Fig 8**, predicts a directivity of nearly 9 dB at an optimum elevation angle of 19°. This is not as good as my actual field-strength measurement of 12 dB but my measurement site was far from perfect.

I felt that this model was reliable enough to try out some oddities. One of these was the tow-bar mounting position. Although this is an unrealistic location for a quarter-wave 50-MHz mobile whip, the reason for including it was just for curiosity—just to see what would happen. In this case the body of the vehicle appears to act as a screen.

The Search for a More Effective Mobile DX Antenna

The most common method of improving the effectiveness of an antenna is to increase the gain. With a mobile antenna this cannot be done by increasing the height, so it has to be done with directivity—gain in one direction at the expense of another.

I made several models of a vertical two-element beam. I used 21.2 MHz for this investigation—one reason was that 15 meters is my favorite DX band and the other is that the element spacings are easily achievable on a small vehicle. The model is shown in **Fig 9** and is constructed by simply adding a parasitic element spaced around 0.1 λ from an existing mobile antenna mounted on the roof at the rear of the vehicle. The parasitic element can be fixed to the roof using a magmount but is not insulated from it with a base insulator. The spacing shown in Fig 9 seems optimum for 21.2 MHz and the parasitic element is tuned as a director.

Radiation patterns predicted for this antenna are shown in **Fig 10**. For a close-spaced antenna it seemed to have a fairly consistent pattern over the band. Be aware that the feed impedance, according to the model, ranges from 55 Ω to 25 Ω when used as a beam.

I was quite taken with the predictions made by the model of this antenna and have resolved to do some practical experimental work. The main practical problem will be that of tuning the parasitic element. Possibly monitoring feed impedance or

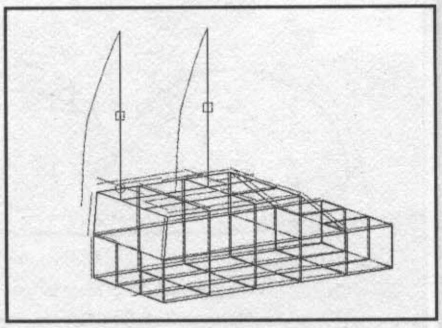

Fig 9—Model of a 21-MHz vertical 2-element beam showing the current amplitude and phase in the structure. The beam can be simply constructed using an existing mobile antenna mounted on the roof at the rear of the vehicle. A mag-mounted parasitic element is then placed at the appropriate distance away from the driven element. Both elements are short and use inductive loading.

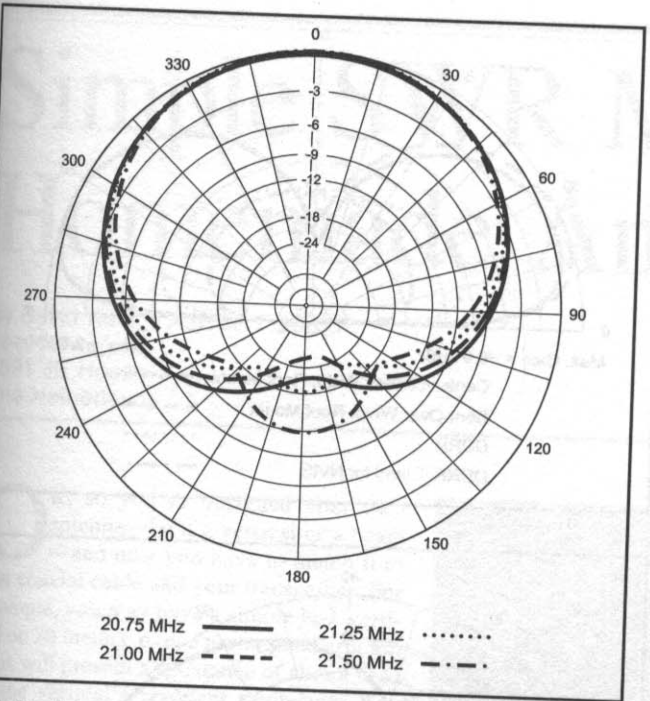

Fig 10—Azimuth patterns of the 21-MHz 2-element beam over the frequency range 20.75 MHz to 21.5 MHz at an elevation angle of 20°. The outer circle represents 2.85 dBi and shows a high front-to-back ratio of around 20 dB. Some of this directivity may be contributed by the conductivity of the vehicle in the favored direction.

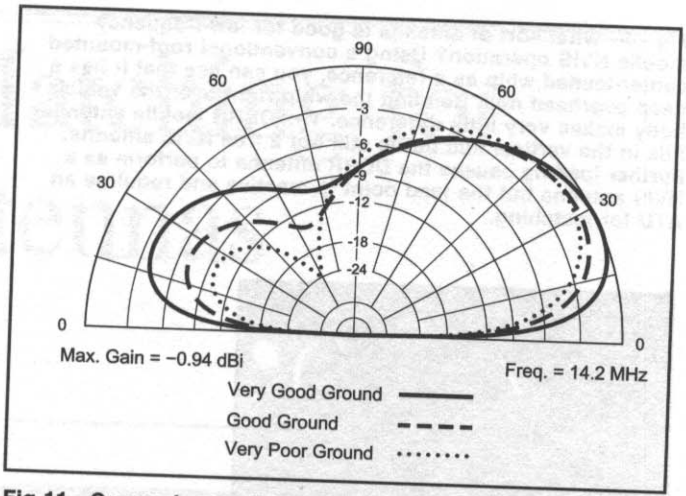

Fig 11—Comparisons of the effect of soil characteristics for a vehicle with a short 20-meter loaded vertical fixed to the rear part of the roof. The ground conductivities and dielectric constants are 0.03 S/m and 20 (very good ground); 0.0075 S/m and 12 (good ground) and 0.001 S/m and 5 (very poor ground) respectively.

parasitic RF current may give an indication that the antenna is functioning as a beam.

Environmental Effects

As was stated earlier, I planned to model the enhanced DX effect noted by G4BUE and G4NXG. The first task was to investigate the effect of ordinary soils as ground. This is shown in **Fig 11** and the patterns are calculated for various conductivities and dielectric constants. Although there are differences, they are not so great. It does explain why, in practice, it seems difficult to find a good QTH (except by the sea) for mobile operating.

Operating near to the sea is a different matter. As shown in **Fig 12** the enhancement is quite marked, provided that you are able to get fairly close to the sea. In some scenic coastal areas there are car parks made for visitors to enjoy the view, which would probably give better results than a chalk cliff. These would appear to be excellent locations for working mobile DX.

Mobile DDRR Antenna

I have made several DDRR antennas for mobile work. Such a structure has the advantage of looking like a luggage rack, and because the antenna has a very low profile it does not have to be removed when the vehicle is driven into a multi-story car park. I used a 14-MHz version of this antenna on the roof of my car some years ago and it proved to be quite good for DX. The construction of this antenna was described in *QST*.[7] It has been included in this modeling exercise for curiosity. The structure of the antenna is shown in **Fig 13**. An analysis of this antenna is given in reference 8.

This antenna is electrically small and uses a capacitive end load to achieve resonance. The antenna can be adjusted over a wide frequency range with an appropriate high-voltage variable capacitor, although for maximum efficiency DX antenna the capacitance should be as small as possible. If the antenna is tuned to lower than the operating frequency, the model indicates that it will work very well in the NVIS mode. See **Fig 14**. However, an antenna tuning unit will be necessary (rather than the simple shunt feed, because the feed point is reactive).

HF Mobile from a Bicycle

As stated earlier, I often operate QRP/M from a bicycle, see **Fig 15**. This presents quite a challenge but does give a lot of satisfaction. HF mobile from a bicycle

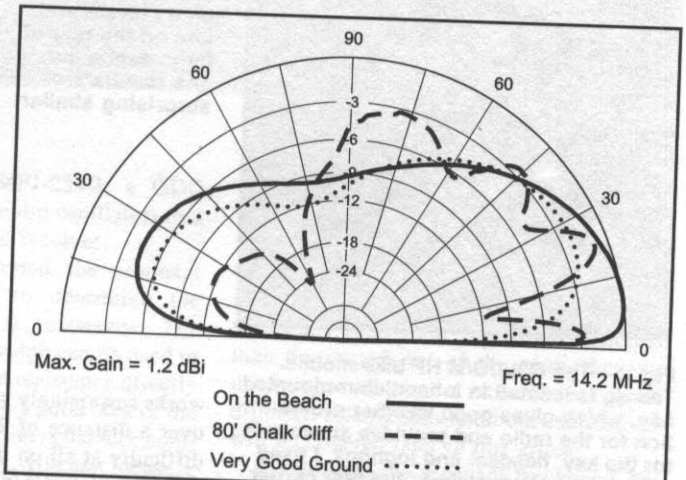

Fig 12—The environmental effect on a 20-meter mobile azimuth pattern when operating near to the sea. A mobile installation operating on very good flat ground is shown for comparison. The chalk cliff represents the situation of operating from very poor ground site next to a very good one. Best results can be had operating from a beach that is soaked in salt water. The front-to-back effect is partially enhanced by the vehicle.

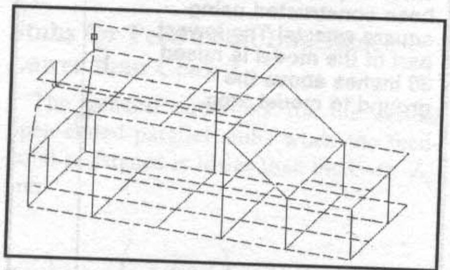

Fig 13—Model of the mobile DDRR antenna. The modeled structure is a rectangle rather than a circle shown in *The ARRL Antenna Book*. In practice, the feed point (circle) is connected directly to the vehicle body without an insulator and is shunt fed. The capacitive load (square) can be adjusted to tune from 80 meters (maximum capacitance) to the natural resonance of the element with minimum capacitance.

Fig 14—What sort of antenna is good for low-frequency mobile NVIS operation? Using a conventional roof-mounted center-loaded whip as a reference, you can see that it has a deep overhead null. Bending the whip right over the vehicle body makes very little difference. The DDRR mobile antenna fills in the vertical null but is still not a true NVIS antenna. Further loading causes the DDRR antenna to perform as a NVIS antenna but the feed point is reactive and requires an ATU for matching.

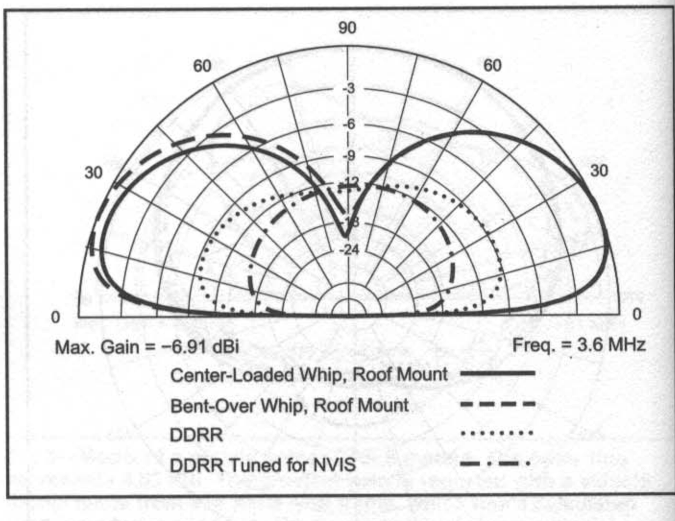

Fig 15—The G3LDO/M HF bike mobile. The rig is located in a handlebar-mounted bag, which gives good weather protection for the radio and provides stowage for the key, headset and logbook. I fixed a thick aluminum plate to the rear carrier to provide a place to fit the battery and a mounting point for the antenna.

Fig 17—Comparison between a 4-foot center-loaded antenna mounted on a bicycle and one on the rear of a large estate car. The results are surprising similar.

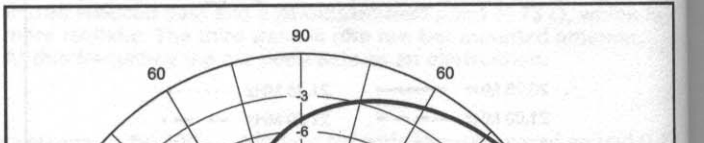

Fig 16—The G3LDO/M HF bike mobile model. For simplicity the model has been constructed using square wheels! The lowest part of the model is raised 30 inches above the ground to model tires.

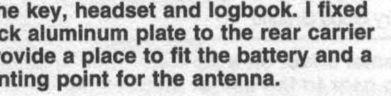

works surprisingly well, with SSB contacts over a distance of 2000 km presenting no difficulty at all on the higher HF bands.

I often wondered if the mobile antenna was less efficient when fixed to a much smaller vehicle, such as a bicycle. My bike mobile comprises a standard mountain bike with front suspension forks. I made a simple model as shown in **Fig 16.**

I then made a comparison between a 4-foot center-loaded antenna mounted on a bicycle and the rear of a large estate car on 21.2 MHz. The results are shown in **Fig 17**.

CONCLUSIONS

The *EZNEC* model does give a good indication of the feed impedance, with measured and modeled values in close agreement. The field-strength measurements also agree with the model, within the limits of the measuring arrangements. These give confidence in the predictions by *EZNEC*.

Examples of *EZNEC* models used in this article are included at the ARRLWeb site: **www.arrl.org/notes/8608**.

NOTES AND REFERENCES

[1] Peter Dodd, G3LDO, *The Amateur Radio Mobile Handbook*, RSGB Publication.

[2] John Belrose, VE2CV, "Short Coil-Loaded HF Mobile Antennas: An Update and Calculated Radiation Patterns," *The ARRL Antenna Compendium Vol 4*.

[3] Leon Braskamp, AA6GL, "*MOBILE*, a Computer program for Short HF Verticals," *The ARRL Antenna Compendium Vol 4*.

[4] Jack Kuecken, KE2QJ, "A High-Efficiency Mobile Antenna Coupler," *The ARRL Antenna Compendium Vol 5*.

[5] Dan Richardson, K6MHE, "VHF Mobile Antenna Performance," *CQ*, Oct 2001.

[6] Roy Lewallen, W7EL, *EZNEC* 3.0, help file. For more information see **http://eznec.com/**. *EZNEC* provides an automated method to create wire grids, although this feature is available only in *EZNEC pro* programs. Wire grid definition is done with a dialog box opened by selecting Create, Wire Grid from the Wires, Window, Other menu. It requires you to specify the coordinates of three corners of the grid, then *EZNEC* will do the rest. You can adjust the wire spacing and diameter if you wish. But the default values, which follow the rules described above, are generally adequate.

[7] Peter Dodd, G3LDO, "The Mobile Roof-Rack Antenna," *QST*, Nov 1988.

[8] Peter Dodd, G3LDO, *The Antenna Experimenter's Guide*, RSGB Publication.

[7] Robert B, Dome, W2WAM, "Study of the DDRR Antenna," *QST*, Dec 1971.

Simple SWR Matching for Homemade Antennas

By David Reid, PA3HBB / G0BZF
Leenderweg 46
5591 JE Heeze
The Netherlands

Using an Excel spreadsheet to compute series/parallel-stub matching networks.

OK, so you've designed your own antenna—be it a vertical or a beam—and now you have to match it to you coaxial cable and your transceiver. For example, you may have a simple ¼-λ vertical on 20 meters, over a pretty good ground. This will present a resistance of about 30 Ω at the vertical's resonant frequency. You need some sort of matching network to transform this to 50 Ω at the transmitter. **Fig 1** shows the two series/parallel stub systems used for matching, depending on whether the feed-point resistance at resonance is lower than or higher than the characteristic impedance of your feeder coax. Fig 1 comes from Chapter 26, "Coupling the Line to the Antenna" in the 19th Edition of *The ARRL Antenna Book.*[1]

First, you need to find the resonant frequency of your particular antenna. For this, you need to understand that the resonant frequency is the single frequency of the antenna where the feed-point impedance is purely resistive. There are a number of pieces of test equipment with which you can measure the resonant frequency. These include the famous MFJ-259B, a GDO (grid-dip oscillator/gate-dip oscillator) or a simple noise bridge and receiver.

Once you've confirmed the resonant frequency, you need to determine the feed-point resistance at resonance. The MFJ-259B or a noise-bridge can be used to determine the feed-point resistance directly at resonance. If you have a good idea of the magnitude of the feed-point resistance compared to your coax's Z_0, you can measure the SWR directly, using an MFJ-259B or a standard SWR meter connected through a short coaxial cable.

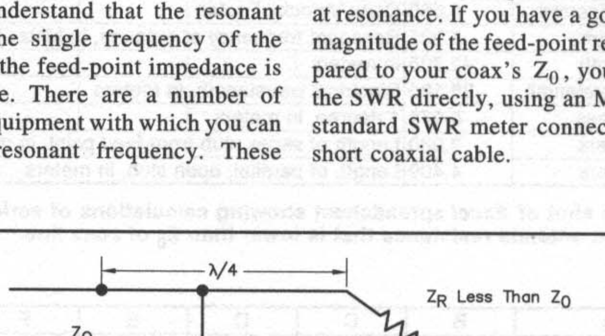

Fig 1—Use of open or closed parallel stubs for canceling the parallel reactive component of input impedance of series line section.

Where the resonant-frequency feed-point impedance is lower than the characteristic impedance Z_0 of the coax, we require a series stub from the feed point, ending in a parallel open-ended stub. If the resonant-frequency feed-point resistance is higher than the impedance of the coax, then we need a shorted parallel stub. These require different calculations and both calculations will be covered later in this article.

Armed with the resonant frequency, the fact whether the resistance is higher or lower than the coax Z_0 and the SWR at resonance, we only require one other piece of information, and that is the velocity factor of the coaxial cable. This is used to calculate the electrical wavelength, with 360° equaling one wavelength.

Stubs for Feed-Point Impedance Lower than Coax Z_0

The general equations for the series/open-ended parallel stubs when the feed-point resistance is lower than the coax Z_0 are:

$$A = \arctan\left(\frac{1}{\sqrt{\mathrm{SWR}}}\right) \qquad \text{(Eq 1)}$$

$$B = \arctan\left(\frac{\mathrm{SWR}-1}{\sqrt{\mathrm{SWR}}}\right) \qquad \text{(Eq 2)}$$

$$\lambda = \frac{300}{f}\text{, in meters} \qquad \text{(Eq 3)}$$

$$E_{\lambda} = \lambda \times VF \qquad \text{(Eq 4)}$$

Where:

A is the length of the series stub, in degrees, from the feed point to the junction of the parallel, open stub.

B is the length of the parallel, open-ended stub, in degrees.

λ is the wavelength in free space, in meters.

VF is the velocity factor of the coaxial cable (0.66 for RG-58A).

Now, before you are completely scared off by the mathematics of the calculations, it is very easy to calculate these using a scientific calculator or computer spreadsheet. Below, I describe the formulas for inserting into an *Excel* spreadsheet.

A potentially confusing side effect of using *Excel* is that it performs all of its calculations in radians. However, *Excel* also provides a command to convert from radians to degrees. I use column A for labeling the contents of working column B. Enter the following formulas into a blank *Excel* worksheet:

- In cell B4 enter the value of the SWR recorded for your antenna.
- In cell B6 enter the formula **=DEGREES (ATAN(1/SQRT(B4)))** {This calculates the distance from the feed point for the series stub, in degrees, to the junction of the parallel open-ended stub}.
- In cell B7 enter the formula **=DEGREES (ATAN((B4-1) SQRT(B4)))** {This calculates the length of the parallel stub, in degrees}.
- In cell B8 enter the velocity factor of the coaxial cable you are using.
- In cell B9 enter the resonant frequency of your antenna, in MHz.
- In cell B10 enter the formula **=300/B9** {This calculates the free-space wavelength, in meters}.
- In cell B11 enter the formula **=B10*B8** {This calculates the electrical wavelength of coax, in meters}.
- In cell B12 enter the formula **=B11/360** {This calculates one electrical degree of coax wavelength, in meters}.
- In cell B13 enter the formula **=B12*B6** {This calculates the D value for the series stub, in meters}.
- In cell B14 enter the formula **=B12*B7** {This calculates the L value for the open parallel stub, in meters}.

Note that in cell B6 we had to convert the arc tangent value to degrees, since *Excel* calculates everything in radians. Now for an example:

I have a 2-element 40-meter linear-loaded beam that is resonant at 7.025 MHz. At this frequency, the feed-point impedance is 12.5 Ω and, therefore, the 50-Ω SWR is 4.0:1 **Fig 2** shows the resulting spreadsheet.

I measured a 2.08-meter piece of 50-Ω RG-58A (velocity factor 0.66) and connected this to the feed point. Using a UHF T-connector at the end of the 2.08-meter cable, I connected in parallel an open-ended 4.409-meter long RG-58A tuning stub. From the other side of the T-connector a longer length of coax went to the SWR meter in the shack. The SWR when transmitting on 7.025 MHz was very close to 1.0:1. This allowed my solid-state transmitter to generate full output power (100 W) into the antenna.

I sealed the open end of the stub against the weather and wound the 4.409 meters of cable around a piece of plastic 32-mm drainpipe. I attached this to the boom using cable ties. I measured the SWR again to prove that the winding of the stub didn't affect the SWR and this was the case, since I noticed no change in the SWR reading.

Stubs for Feed-Point Impedances Higher than Coax Z_0

The second example is a 12-element 2-meter Yagi I designed using a folded dipole for the driven element. The antenna was resonant at 144.300 MHz and has a feed impedance of 110 Ω at resonance. A 50-Ω coax directly feeding this antenna would result in a 2.2:1 SWR. Because the impedance of the antenna is higher than the impedance of the coax, we need to use different formulas to obtain the correct lengths (for a shorted stub), the formulas are:

$$A = \arctan\left(\sqrt{SWR}\right) \qquad \text{(Eq 5)}$$

$$B = \arctan\left(\frac{\sqrt{SWR}}{SWR - 1}\right) \qquad \text{(Eq 6)}$$

Where:

A is the length of the series stub, in degrees, from the feed point to the junction of the parallel, shorted stub.

B is the length of the parallel, shorted stub, in degrees.

Start a new sheet in *Excel*. Again, I used column A for labeling the contents of column B.

- In cell B4 enter the value of the SWR

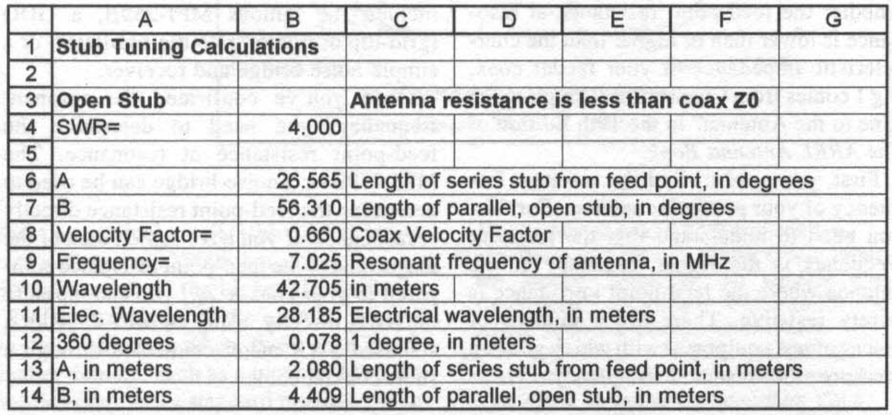

	A	B	C	D	E	F	G
1	**Stub Tuning Calculations**						
2							
3	**Open Stub**		**Antenna resistance is less than coax Z0**				
4	SWR=	4.000					
5							
6	A	26.565	Length of series stub from feed point, in degrees				
7	B	56.310	Length of parallel, open stub, in degrees				
8	Velocity Factor=	0.660	Coax Velocity Factor				
9	Frequency=	7.025	Resonant frequency of antenna, in MHz				
10	Wavelength	42.705	in meters				
11	Elec. Wavelength	28.185	Electrical wavelength, in meters				
12	360 degrees	0.078	1 degree, in meters				
13	A, in meters	2.080	Length of series stub from feed point, in meters				
14	B, in meters	4.409	Length of parallel, open stub, in meters				

Fig 2—Screen shot of *Excel* spreadsheet showing calculations of series/parallel stubs to match antenna resistance that is lower than Z_0 of coax line.

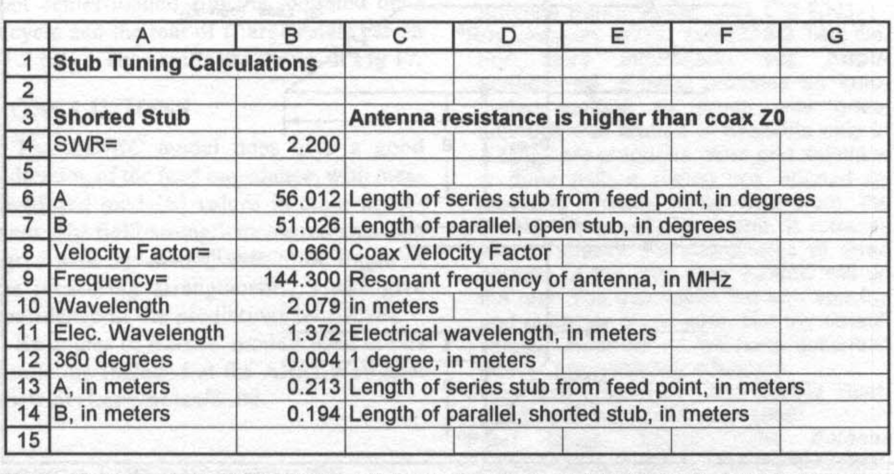

	A	B	C	D	E	F	G
1	**Stub Tuning Calculations**						
2							
3	**Shorted Stub**		**Antenna resistance is higher than coax Z0**				
4	SWR=	2.200					
5							
6	A	56.012	Length of series stub from feed point, in degrees				
7	B	51.026	Length of parallel, open stub, in degrees				
8	Velocity Factor=	0.660	Coax Velocity Factor				
9	Frequency=	144.300	Resonant frequency of antenna, in MHz				
10	Wavelength	2.079	in meters				
11	Elec. Wavelength	1.372	Electrical wavelength, in meters				
12	360 degrees	0.004	1 degree, in meters				
13	A, in meters	0.213	Length of series stub from feed point, in meters				
14	B, in meters	0.194	Length of parallel, shorted stub, in meters				
15							

Fig 3—Screen shot of *Excel* spreadsheet showing calculations of series/parallel stubs to match antenna resistance that is higher than Z_0 of coax line.

recorded for your antenna.

- In cell B6 enter the formula **=DEGREES (ATAN(SQRT(B4)))** {This calculates the distance of the series stub from the feed point, in degrees}.
- In cell B7 enter the formula **=DEGREES (ATAN(SQRT(B4)/(B4-1)))** {This calculates the length for the parallel, shorted stub, in degrees}.
- In cell B8 enter the velocity factor of the coaxial cable you are using (0.66 for RG-213).
- In cell B9 enter the resonant frequency of your antenna, in MHz.
- In cell B10 enter the formula **=300/B9** {This calculates the free-space coax wavelength, in meters}.
- In cell B11 enter the formula **=B10*B8** {This calculates the electrical coax wavelength, in meters}.
- In cell B12 enter the formula **=B11/360** {This calculates one degree in coax electrical wavelength, in meters}.
- In cell B13 enter the formula **=B12*B6** {This calculates the D value for the series stub, in meters}.
- In cell B14 enter the formula **=B12*B7** {This calculates the L value for the parallel shorted stub, in meters}.

Fig 3 shows the resulting spreadsheet. I attached 21.3 cm (0.213 meters) of RG-213 to the feed point, with a UHF T-connector to place the shorted 19.4 cm (0.194 meter) stub in parallel. I then connected the coaxial cable going to the SWR meter in the shack to the other arm of the T-connector. Indeed, the SWR at 144.300 was 1.0:1, as calculated.

Conclusion

This matching method works on the principle of using series stubs, with parallel open or shorted stubs. The formulas work for all SWR readings under about 6:1. It is a fast and effective method for matching any resonant antenna to the transmitter. The stubs can be fabricated in the field with the minimum of tools. This technique has the limitation that it really only works well at the resonant frequency and it doesn't cancel any reactances (inductive or capacitive) in the antenna.

NOTES AND REFERENCES

[1]R. D. Straw, Editor, 19th Ed., *The ARRL Antenna Book* (Newington: ARRL, 2000), Chap 26, pp 26-12 to 26-14.

An *Excel* spreadsheet, **PA3HBB Series_Parallel Stubs.XLS**, you can use for your own calculations is located on the ARRLWeb at: **http://www.arrl.org/notes/8608**.

A Short Dipole Design Method

By John T. Ison, AA7KY
259 Bonnevista Terrace
Shakopee, MN 55379
Email: **AA7KY@hotmail.com**

AA7KY discusses a different technique for designing short dipole antennas.

Not long ago, I relocated to the Midwest and moved into a "manufactured home community" (ie, a mobile-home park). Their rules disallowing outside antennas left little doubt that any kind of Amateur Radio antenna was out of the question. That's what got me to thinking about "short dipoles." I could mount one of those on a pole, strap the pole to my back step railings, and remove it when my operating session was over.

I had never built or used a short dipole before, and rather than simply look it up in *The ARRL Antenna Book*, I decided to figure out how to do so on my own, using experimental results to fine-tune a mathematical approach. (I sometimes have shortcomings that way!) This article describes my somewhat unconventional design technique that accurately predicts your short dipole before building it. It allows you to fully specify the antenna dimensions and to determine the coil inductance before you start construction.

I have found that its accuracy is just about proportional to how meticulous you are in the construction process. Let me briefly describe the evolution of the technique. A single straight wire in free space has a resonance determined by its inherent inductance and capacitance. (Just like inductance, it has self-capacitance, since charge can be stored at different voltage points along the wire.) If we knew both of those, we could calculate its resonant frequency. Or knowing that its length represents approximately one-half wavelength at resonance, we could determine its resonant frequency based on length. From *The ARRL Handbook*, the equation for the inductance of a straight wire is:

$$L_W = 0.00508 \times b \times \left(\ln\left(2b / a\right) - 0.75\right) \qquad \text{(Eq 1)}$$

where L_W is the inductance in µH for a straight wire segment of length b in inches and radius a, also in inches. The term ln describes the natural logarithm of 2b/a.

Given the above relationships you can easily derive an equation for the capacitance of a straight wire, based only on its length and diameter:

$$C_W = \frac{b}{7\left[\ln\left(2b / a\right) - 0.75\right]} \qquad \text{(Eq 2)}$$

where C_W is the capacitance in pF of a straight wire of length b in inches and radius a, also in inches. (You can verify these equations by applying it to a full-size dipole. Simply calculate the inductance and the capacitance, and plug those L and C values into the resonant frequency formula. You will obtain the same resonant frequency as you would have based solely on its length.)

Being able to calculate wire capacitance and inductance makes it possible to account for the segments in a short dipole, leaving just the coil values to determine. Since you are specifying the frequency beforehand, you can calculate the coil inductance.

Let's run through the complete step-by-step process and design a short dipole for 15 meters. **Fig 1** is what our antenna will look like, and **Fig 2** contains a list of equations that we will use. (This was one of my first prototypes. Later in this article, I include a three-step process that combines many of these steps into just a couple of equations.)

Assume that your short dipole is for 21.1 MHz and will use a 6-foot wooden pole with each coil centered on each side of the feed point. A good segment length ("b" in Fig 1) would be 15 inches, which leaves about a foot total for both coils. Assume also, that you will use #22 insulated wire (with a radius of 0.0125 inches) for the coils and the segments, and that you have a coil-form diameter of 1.625 inches. Calculate the segment capacitance using Eq D in the list in Fig 2. Multiply by 4 for all the segments, then double that value. This gives 0.305 pF per segment, and results in a total of 2.44 pF. This is the total antenna C_T.

Knowing C_T now allows us to calculate the total inductance L_T, using Eq B in the list. We obtain 23.32 µH, which includes both coils and the four b segments. Calculate the straight-wire inductance of one segment using Eq C, which is 0.536 µH, multiplied by 4. This gives 2.144 µH. Subtract this from the total. This leaves 21.18 µH, which represents both coils. The required inductance for

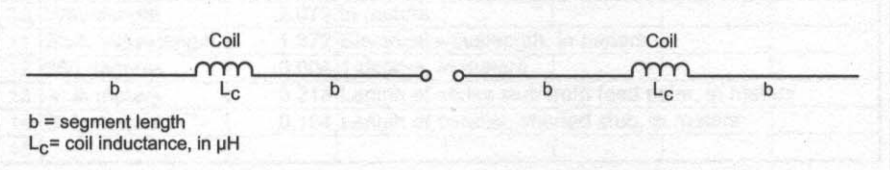

Fig 1—Typical short dipole with centered coils on each side.

each of our coils then is half of that, or 10.59 µH. We can now determine how many turns are required, by using Eq G in the list.

When I actually constructed this prototype, I was testing the process and did not allow for any mistakes—that is, an extra coil turn or long outer segments to later trim. Using a Grid Dip Oscillator, a frequency counter with a whip and a loop at the feed point, I found the resonant frequency at 21.06 MHz. Pretty close!

Note that this technique is not intended to be a full-blown theoretical analysis of the system. To fully analyze the system means accounting for mutual inductance, a not-so-easy thing to do. However, as a paper-design technique to predict coil values when segments have specified dimensions, it works very well.

The above step-by-step process is pretty tedious. To simplify, I've combined many of those steps into just three. The three-step process assumes that you will center each coil on the sides. Before you sit down to design your antenna though, you need to know some accurate details about the materials you will use.

1. What is the precise radius of the wire that will be used for the coils and the segments? Note that this is the conductor itself, not the insulation. In my experience, the designated gauge of the wire is usually somewhat exaggerated, so you may want to measure it yourself. Wind a dozen or so turns and carefully measure the span. Divide by the actual number of wires in the span to obtain a good average diameter. Divide by two to get the radius.
2. What will be the coil diameter, based on the wire size and the coil form you will use? Try to use the conductor-to-conductor centers to obtain the diameter.
3. How many turns per inch will you realistically obtain when you wind the coils? This has tripped me up several times. You will use this figure to determine coil length, and if not accurate, your coil inductance will not be as calculated, even though you have the specified number of turns. A good approximation is to actually wind about two inches or so, then count the turns in any one-inch space. A small error here accumulates as the coil length gets larger. (More on this later.)

The 3-step process is simply three equations that tell you the required coil inductance and number of turns, based on the materials you are using, the segment size (b) and the desired frequency. Decide what you want the segment length to be, appropriate for the overall antenna size, then perform the following steps. Be careful to note the units of measure in the formulas: inches, µH, pF and MHz. You will need a calculator that can do natural logs.

1. **Using Eq E, determine the value of x for the segment length b and wire radius a.** Store this value. You will use this in the next step. (Note that 'ln' refers to the natural log, where the base is e = 2.71828.)
2. **Using Eq F, calculate the coil inductance you will need.**
3. **Using Eq G, determine how many turns are required to obtain L_C.**

In order to do this, you must already know the length of the coil. The goal here is to find the number of turns that result in coil inductance L_C, at the specified length s. What I usually do is make a list. Try some estimates for n, each time calculating and using the length s resulting for that many turns. (Use the turns/inch figure that you carefully determined earlier.) Continue making estimates until you arrive at the required L_C for a certain number of turns that you know will precisely occupy the

Resonant-frequency equation for L and C:

$$F_R = \frac{1}{2\pi\sqrt{LC}} \qquad \text{(Eq A)}$$

where F_R is the resonant frequency in hertz, L is the total inductance in henries, C is the total capacitance in farads. Rewriting Eq A to solve for inductance:

$$L_T = \frac{1}{4\pi^2 F_R^2 C_T} \qquad \text{(Eq B)}$$

where L_T is the total inductance in henries, F_R is the resonant frequency in hertz, C_T is the total capacitance in farads.

$$L_W = 0.00508\, b \left(\ln\left(2b/a\right) - 0.75\right) \qquad \text{(Eq C)}$$

The straight-wire capacitance, in pF, of one segment length b:

$$C_W = \frac{b}{7\left[\ln\left(2b/a\right) - 0.75\right]} \qquad \text{(Eq D)}$$

Setting up an intermediate value x:

$$x = \ln\left(2b/a\right) - 0.75 \qquad \text{(Eq E)}$$

where b is the wire length in inches and a is wire radius in inches.

Compute each coil's inductance:

$$L_C = \frac{11080x}{F_R^2\, b} - \left(0.01016bx\right) \qquad \text{(Eq F)}$$

where L_C is the coil inductance in µH, y is the value from Eq E, F_R is the desired resonant frequency in MHz and b is the segment length in inches.

$$L_C = \frac{d^2 n^2}{18d + 40s} \qquad \text{(Eq G)}$$

where: n = required turns to obtain L_C
L_C= coil inductance in µH
d = diameter of coil in inches
s = length of coil in inches

Fig 2—Complete list of equations used in this article.
A is the familiar resonant-frequency equation.
B is the resonant frequency equation, rearranged for inductance L.
C is the equation for calculating the inductance of a straight wire.
D is the derived equation for the capacitance of a straight wire.
E is the equation for a variable needed in Eq F.
F is the custom-derived equation for the inductance of one coil of a short dipole
G is the familiar equation for the inductance of a single-layer air-core coil. Note that 'ln' means the natural log.

length s. This is tedious, but important.

The bottom line is that your coil must have exactly the required inductance predicted by step 2. Without actually measuring it, you are depending on the number of turns and length to specify it.

A good check would be to measure the coil length as you are actually winding it. When you arrive at your specified number of turns, measure the length. If it's not really close to the s value that you used with n, then your coil inductance is not equal to L_C. Calculate what you actually have, then add or remove turns as necessary. Each time recalculate with the new s and n until you obtain L_C.

That's it. Your three-step paper design is finished. That is all that is required to fully design a short dipole that will be quite close to your design frequency when constructed, provided, of course, that you use good construction practices!

When you check its resonant frequency, place it as far from everything as possible, as local objects will add capacitance, making the resonant frequency appear lower than actual. Even if you check it in a large room, don't be too surprised to find the resonant frequency goes up noticeably when it's placed outside, away from everything.

For that reason, it's a good practice to deliberately leave it trimmed on the low side until you mount it where it will actually be used. To trim, simply cut the outer segment end on both sides, a little at a time. Also, to avoid ending up with a higher than desired resonant frequency F_R, requiring that wire or turns be added, I suggest that you add an extra turn to each coil, as well as leaving the outer segments longer than your design. It's easier to trim than add if there is a slight error in the construction process.

In terms of performance, don't expect too much from these short dipoles. They are limited-space antennas that sacrifice some efficiency for space. They will allow you to get on the air though, and add a little extra challenge to operating!

I recently built a 40-meter short dipole, which exhibits an SWR of about 1.35 to 1 at resonance, with a 2:1 SWR bandwidth of just over 40 kHz. It used #18 hookup wire, with 19-inch segments and 143-turn coils (wound directly on the pole), all placed on an 8-foot closet pole. Because my antenna was so narrow-banded, I cut and added small telescoping antennas (intended for cordless phones) to the outer segments and marked the pole for frequency settings.

Another short dipole for 20 meters used #14 wire and 15-inch segments, with 60 turns each coil, also wound directly on an eight-foot closet pole. Its SWR is about 1.2 to 1, and has a 2:1 SWR bandwidth of almost 200 kHz. The larger the wire diameter, the greater will be the bandwidth.

I would like to hear about the results that you obtain with your designs. Feel free to drop me an e-mail message with the details.

Collinear Arrays

By Antonis Konstantinidis, 5B4ZK
Duncan Hill Apartments, #66B
1000 Central Ave
Westfield, NJ 07090
e-mail: **akosta@cytanet.com.cy**

5B4ZK goes through the math for collinear arrays.

The purpose of this report is to provide technical characteristics about the radiation pattern and the gain of collinear arrays. I also will describe techniques for down tilting the vertical beam of collinear arrays. However, the equations I will give also apply to any one-dimensional or two-dimensional linear broadside array, such as the collinear array, the square array and the rectangular array.

Few of the above arrays are actually used in amateur radio, except perhaps for special cases of DX microwave link high-gain applications. Thus my discussion will be concentrated on collinear arrays. Collinear arrays are regularly used because they are simple to construct, apply to any amateur band and provide higher gain levels than a single dipole radiator. In addition, collinear arrays offer the great advantage of being able to down tilt the vertical beam at the desired elevation and direction.

Collinear arrays normally operate in phase and they utilize equally spaced identical elements. A larger number of elements yields a sharper radiation pattern and consequently higher gain. However, the spacing between the elements affects the radiation pattern as well as the level of sidelobes. For instance, if the elements are spaced closely, a broader radiation pattern will result, yielding reduced gain as well as lower level of sidelobes.

If the appropriate parameters are known, the radiation pattern of a collinear array can be easily calculated by summing the field of each individual antenna in the desired direction. Due to the fact that vectors represent the transmitting field of each antenna element, the maximum field intensity occurs at the direction where all fields are added in phase.

General Concepts

Vertically stacking additional radiating elements (bays) for an antenna will enhance the gain, at the cost of narrowing the radiating beam in the elevation plane. Due to the fact that the horizontal radiation pattern remains unmodified, collinear elements are widely used in applications where high-gain omnidirectional antennas must be employed. Such omnidirectional antennas consist of several stacking bays in phase. When all elements operate in phase the maximum radiation occurs at right angles to the line of the array. The elevation angle of the maximum radiation can be calculated from Eq 1:

$$\arcsin \Theta = \frac{\Delta\Phi\,\lambda}{2\pi\, S_\lambda} \qquad \text{(Eq 1)}$$

$\Delta\Phi$ is the phase difference between the adjacent elements in electrical degrees, and S_λ is the spacing of the elements in terms of λ in electrical degrees. Eq 1 shows that when all elements are fed in phase ($\Delta\Phi = 0$) the maximum radiation occurs at an elevation angle $\Theta = 0°$. If the elements are placed slightly out of phase, the vertical beam steers to a new direction. For example, the following demonstrates how to find the direction of maximum radiation for a sample array employing four collinear elements.

Given: $\Delta\Phi = 30°$ and $d = 0.75\ \lambda\ (270°)$, $\arcsin \Theta = 30/270$ and thus $\Theta = 6.37°$.

According to Eq 1 the vertical beam will shift downwards from 0° to 6.37°.

$$\text{Array Factor} = \frac{\sin\left(N\psi/2\right)}{N \sin\left(\psi/2\right)} \qquad \text{(Eq 2)}$$

$$\psi = \frac{2\pi\, S_\lambda \sin\Theta}{\lambda} - \Delta\Phi \qquad \text{(Eq 3)}$$

where

The Array Factor is that for N isotropic elements.

$\Delta\Phi$ is the difference in phase between the elements.

ψ = the phase of the array in a given direction. When $\psi = 0$, the array is in phase for that given direction.

N = number of elements

Θ = the angle of radiation (elevation angle)

S_λ = distance between elements, in terms of λ

λ = wavelength.

See **Fig 1** for a plot of the radiation pat-

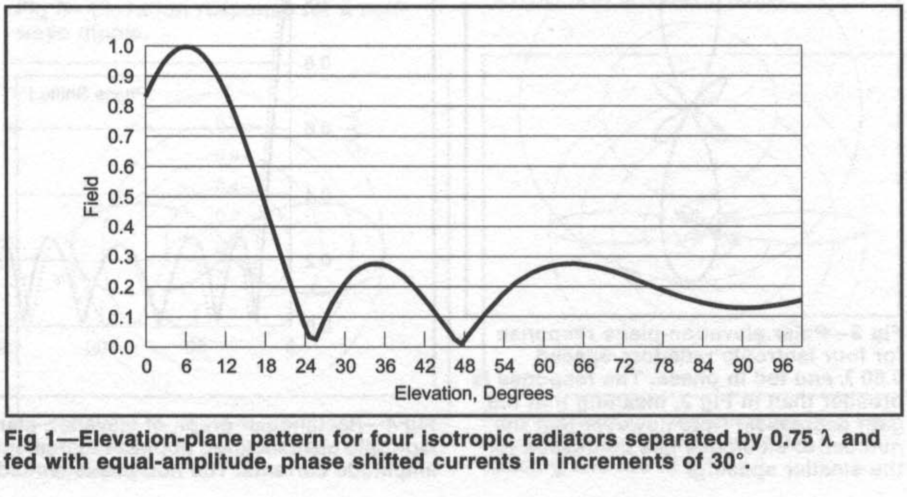

Fig 1—Elevation-plane pattern for four isotropic radiators separated by 0.75 λ and fed with equal-amplitude, phase shifted currents in increments of 30°.

tern resulting from using Eq 2 and Eq 3. Fig 1 plots the field intensity of an array (consisting of four isotropic radiating sources) versus the elevation angle.

For instance, let us calculate the array factor of four collinear omni-directional elements at the elevation angle of 30°. The elements operate in phase and they are spaced 0.8 λ.

$$\Delta\Phi = 0$$

$$\psi = (360° \times 0.8) \times \sin(30°) = 144°$$

$$\text{Array Factor} = \frac{\sin\left(4 \times 72\right)}{4 \sin 72} = 0.25 = 25\%$$

According to Eq 2, the field strength at 30° has been calculated to be 25%. The maximum value of the Array Factor in the given equation is always unity and will occur when $\psi = 0$. By taking the absolute value of Eq 2, the minus sign is eliminated.

In the case of applying Eq 2 to a non-omnidirectional array, the principle of *pattern multiplication* must be applied. An important consideration to remember when using Eq 2 is that represents field and not power. In order to calculate power, the given equation must be squared. Then the gain in dBi can be expressed as:

$$\text{Gain} = 10 \log\left(\text{Array Factor}^2 \times N\right) \quad \text{(Eq 4)}$$

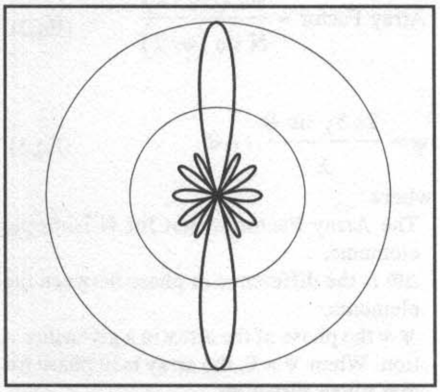

Fig 2—Polar elevation-plane pattern for four isotropic radiators spaced 0.80 λ and fed in phase. Compare this plot to the one in Fig 3 below.

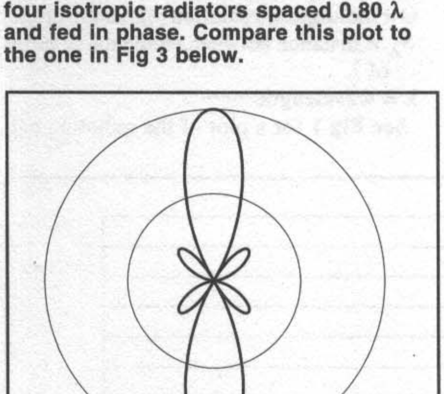

Fig 3—Polar elevation-plane response for four isotropic radiators spaced 0.50 λ and fed in phase. The response is broader than in Fig 2, meaning that the gain decreases. Note however that the number of sidelobes has decreased for the smaller spacing.

The effect of mutual coupling is an important parameter in gain calculations only when collinear elements are placed very closely to each other. However, if spacing becomes larger than 0.5 λ the coupling becomes too insignificant to be included in the calculations. The impedance of the elements will not be significantly affected if the spacing is kept as mentioned above. When collinear arrays are mounted vertically the standard spacing is usually in the region of 0.5 λ to 1 λ. Radiation patterns calculated from the above formulas are shown in **Fig 2** and **Fig 3**. In the same manner, the radiation patterns for larger collinear arrays can be plotted.

Vertical Beam Down Tilting

Based on the above formulas, vertical beam down tilt becomes very easy to achieve. The sign of ΔΦ determines the direction of the beam in the elevation plane. Practically, the way to arrange the phase in a collinear array is by the use of transmission-line delay sections. The line length provides the appropriate phase delay to the adjacent elements, assuming that the drive-point impedances are matched properly to the characteristic impedance of the phasing line.

Starting from the top of the supporting tower, the phase distribution for each element in an array would be:

1. 0
2. 1 × ΔΦ
3. 2 × ΔΦ
4. 3 × ΔΦ

…

N. N × ΔΦ

The length of the transmission line delay section can be determined if you know the Velocity Factor of the transmission line. For instance, let's down tilt the vertical beam by 3° for an array consisting of four collinear elements. If the spacing between the elements is 0.8 λ, what must the phase distribution be on each element? The problem is formulated as: Given, $S_\lambda = 0.8\,\lambda$, $\theta = 3°$, what must ΔΦ be?

From Eq 3, $$\psi = \frac{2\pi\, S_\lambda \sin\Theta}{\lambda} - \Delta\Phi$$

$$(360° \times 0.8) \times \sin(3°) = \Delta\Phi, \text{ or } \Delta\Phi = 15°.$$

The resulting phase delay on each element is shown in **Table 1**:

The radiation pattern of this array is shown in **Fig 4**. The beam is shifted accurately by the phase distribution in the elements. The physical length of the delay sections is given below, where VF is the velocity factor for the transmission line:

For 0°: 0×λ/(360×VF)

For 15°: 15×(λ/360×VF)

For 30°: 30×(λ/360×VF)

For 45°: 45×(λ/360×VF)

Table 1
Phase delay on elements of four-element phased array with –3° tilt.

	Element 1	Element 2	Element 3	Element 4
Phase Delay	0°	15°	30°	45°

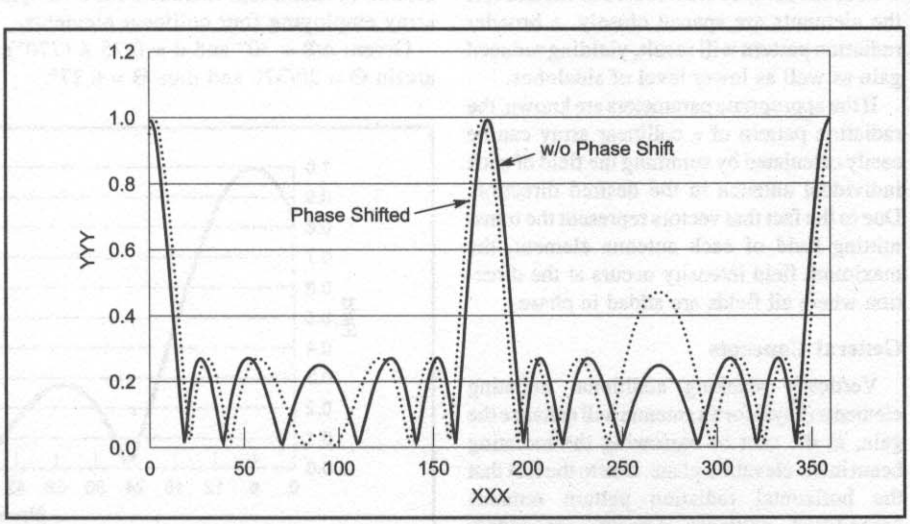

Fig 4—Rectangular graph of elevation-plane response for four stacked collinear isotropic elements, fed in phase increments of 0°, 15°, 30° and 45° with equal-amplitude currents. The non-phase shifted response is shown for comparison as well.

Note that Eq 2 becomes complicated to solve when the numerator and denominator are zero. The aforementioned designates the angle of maximum radiation and it occurs when $\psi = 0$. In such case L'Hôpital's rule must be applied. However, the result will be always unity.

When the desired azimuthal pattern is omnidirectional, collinear arrays usually consist of vertically mounted half-wave dipoles, as mentioned above. The elevation angle of a collinear array is determined by the spacing and the number of the adjacent elements that the array employs. The elevation-plane radiation pattern can be approximately calculated from Eq 2. However, Eq 2 does not take into account the radiation pattern of a half wave dipole.

Further, the Array Factor yielded by Eq 1 represents the field reinforcement of an array consisting of N isotropic point sources. The gain of an isotropic point source is 0 dBi—in other words, the magnitude of the transmitting field is equally radiated in all directions in the elevation as well at the azimuth planes. For a half-wave dipole the situation is different. In the azimuthal-plane, the dipole provides directivity, yielding a half-power beamwidth of 78°. When the length of the half wave is extended to a full wave, this results in an even sharper radiation pattern, since the beam pattern is compressed to 47°.

The length of a dipole should not exceed 1.2 λ, because then it will result in a multi-lobed radiation pattern. By contrast, when the length of a dipole is reduced directivity reduces proportionally as well. The half-power beamwidth of a small dipole is 90°. As a result, the azimuthal-plane radiation pattern of a dipole antenna with length = L can be investigated by the use of Eqs 5, 6 and 7 below. Radiation patterns based on these equations are illustrated in **Fig 5** and **Fig 6**.

$$\text{When } L = \lambda/2,\ E = \frac{\cos\left(\frac{\pi}{2}\cos\Theta\right)}{\sin\Theta} \quad \text{(Eq 5)}$$

$$\text{When } L = \lambda,\ E = \frac{\cos\left(\pi\cos\Theta\right)+1}{\sin\Theta} \quad \text{(Eq 6)}$$

$$\text{When } L = 3\lambda/2,\ E = \frac{\cos\left(\frac{3\pi}{2}\cos\Theta\right)}{\sin\Theta} \quad \text{(Eq 7)}$$

In order to calculate an accurate radiation pattern of a collinear array that consists of vertically mounted half-wave dipoles, the array must be treated as though the radiators were isotropic point sources. Hence, the resulting pattern must be multiplied to the pattern of the single half-wave dipole. The product of the two patterns is the real radiation pattern of the system. Such a radiation pattern is shown in **Fig 7**.

Note that the patterns of Figs 5, 6 and 7 employ a reference angle at 90°, instead of 0° that has been used in the previous examples. As a result, Eq 3 must be modified according to the new angle of radiation and is given as Eq 8:

$$\psi = \frac{2\pi \times S_\lambda \times \cos\Theta}{\lambda} - \Delta\Phi \quad \text{(Eq 8)}$$

In the same manner, radiation patterns for collinear arrays consisting of different types of elements can be estimated.

One of the biggest problems encountered in the design of collinear arrays is matching the array to 50-Ω feed systems. Several methods have been employed; however the problem becomes very complicated when each element has a different feed-point impedance than 50 Ω. The quarter-wave transmission-line transformer method is convenient for matching with a pair of 50-Ω elements and also when the total number of elements is even.

The most common method for coupling the system into a 50-Ω transmitter/receiver system is to combine all elements in parallel at a common feed point, and then step up the impedance using a series quarter-wave transformer. In commercial work, such transformers are often made using air-insulated quarter-wave transmission lines made of cylindrical tubes. They employ connectors in parallel such as N-type connectors feeding an LC connector for high power applications.

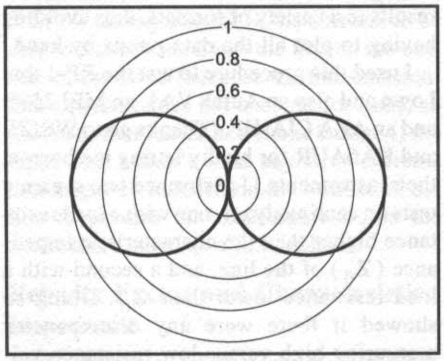

Fig 5—Elevation response for a half-wave dipole.

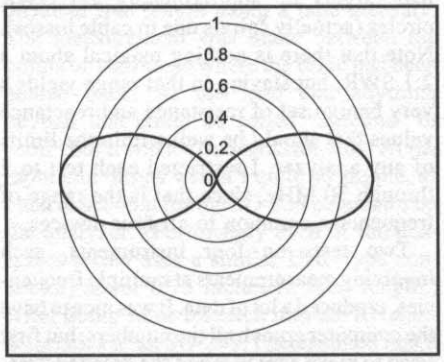

Fig 6—Elevation response for a full-wave dipole.

However, ordinary coaxial cables will work satisfactorily, despite their insertion losses and RF power limitations. Note that commercially available coaxial cables do not always have the optimum characteristic impedance to provide the proper transformation for quarter-wave transformers.

Raising the Feed-Point Resistance

At the junction of two matched 50-Ω parallel-connected coax cables you will find a net resistance of 25 Ω. To match this to 50 Ω using a quarter-wave transmission-line transformer you would need a coax with a 35.4-Ω characteristic impedance, a non-standard value. To design a system without the need of any transformer, the feed-point impedance of all elements when they combine together could provide the desired 50 Ω directly. The feed-point resistance of a single element must be raised up to 100 Ω, so that two such elements in parallel would yield a 50-Ω feed point. It is important to note that in such cases the coaxial line, which connects to each antenna, must have the same characteristic impedance as the antenna to get away from losses due to SWR.

An ordinary half-wave horizontally polarized dipole will provide an feed-point impedance between 65 to 72 Ω. When the dipole's length is longer than a half-wave, the impedance becomes larger. The opposite will result as the length of the dipole is reduced.

However, ordinary dipoles are not recommended for serious applications due to the fact that they provide no grounding protection. Gamma-matched driven elements are considered more reliable because of their inherent good grounding, and they also provide excellent matching. In addition, gamma construction characteristics can be more reliable under rough weather conditions.

The gamma matching system is useful in Yagi-type directional antennas, where the feed impedances are reduced dramatically due to the loading effect of parasitic elements. When all antennas are combined together, the physical length of the transmission line at each element must be kept equal for all antennas to be fed properly in phase. For vertical down tilting, the length of the feed lines must be extended proportionately, as was discussed earlier.

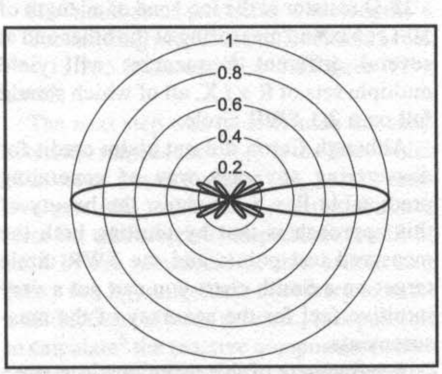

Fig 7—Elevation response for four half-wave collinear dipoles with 0.8 λ spacing and fed in phase.

T-Time for the Analyzers

By Dan Maguire, AC6LA
2150 Louis Holstrom Dr
Morgan Hill, CA 95037
e-mail: **ac6la@arrl.net**

No, this article is not about playing golf. Instead, I'll discuss testing the accuracy of four popular impedance analyzers: the MFJ 259B, the Autek RF-1, the Autek VA1 and the AEA CIA-HF. I'll also show how a coax T connector can be used to overcome a problem common to all four devices.

I've owned an Autek RF-1 for several years and it's served me well, but I've always been curious as to just how accurate it is. Sure, I've put various resistors across the input jack to see what the meter reads at different frequencies. But what I really wanted to know was the accuracy with complex impedance loads consisting of both resistance and reactance. Although I envy those hams that do, I don't have access to laboratory grade bridges, vector-impedance meters, network analyzers or precision reactance standards that I could use for comparison. My "precision standards" are found in a package of 1% resistors from RadioShack. What to do?

Wilfred Caron described one approach.[1] He terminated a short length of transmission line with a fixed resistor and took impedance measurements at the other end, at several frequencies. The input end of the line will show a combination of resistance and reactance that varies with frequency, but all the points should lie on the same SWR circle (for an ideal line) when plotted on a standard Smith chart. For example, placing a 25-Ω resistor at the load end of a length of 50-Ω coax and measuring at the other end at several different frequencies will yield multiple sets of R ± *j* X, all of which should fall on a 2:1 SWR circle.

Although Caron did not claim credit for discovering any new way of generating predictable R ± *j* X values, the beauty of this approach is that by plotting both the measured test points and the SWR circle target on a Smith chart you can get a very intuitive feel for the accuracy of the measurements.

A refinement of this technique is to use a computer to solve the hyperbolic tangent transmission-line equation at multiple frequencies, making it easier to account for line losses and other factors that cause the theoretical (target) curve to depart from a standard SWR circle. More specifically, by using spreadsheet software you can generate precise theoretical values and then use the charting capabilities to display the test results in a variety of formats, thus avoiding having to plot all the data points by hand.

Do you own one of those handy antenna analyzers? Would you like to know how accurate it is?

I used this procedure to test the RF-1 that I own and also an Autek VA1, an MFJ 259B and an AEA CIA-HF. (Thanks go to W6JZE and KA6AUR for kindly letting me borrow their instruments.) I performed two separate tests on each analyzer, one with a load resistance higher than the characteristic impedance (Z_0) of the line, and a second with a load resistance lower than Z_0. Doing so showed if there were any discrepancies measuring high versus low resistance values or positive versus negative reactance values at any given frequency. Both tests had targets of approximately 2:1 SWR circles (actually spirals due to cable losses). Note that there is nothing magical about a 2:1 SWR, but staying in that range yields a very benign set of resistance and reactance values that should be well within the limits of any analyzer. I restricted each test to 2 through 30 MHz, since that is the range of frequencies common to all four devices.

Two tests on four instruments, each involving measurements at multiple frequencies, produced a lot of data. It was nice to have the computer crunch all the numbers, but first I had to make sure to avoid the dreaded "garbage in, garbage out" syndrome.

DETERMINING THE INPUTS TO THE TRANSMISSION-LINE EQUATION

The transmission-line equation, like any equation, will only yield results that are as accurate as the data used. To take advantage of the processing power and accuracy of a computer it is necessary to spend some time considering the input data.

It would have been convenient to use just nominal, published values for the velocity factor, characteristic impedance and matched-line attenuation of the coax I was using, RadioShack RG-58. But then if the measured data points did not coincide with the theoretical curves, it would not be clear whether the difference was due to inaccuracy in the measuring instrument or inaccuracy in the input parameters to the transmission-line equation. Consequently I needed to measure the characteristics of the line (and the load) accurately.

Anyone who experiments with transmission lines has their own favorite ways of determining line characteristics. A lot depends on the equipment at hand and the desired tradeoff between accuracy and convenience. I will review the procedures I used so that you can duplicate them if you desire, but keep in mind that there are other ways to derive the same information. Note that the techniques described here require that the parameters be measured in a particular order, because each measurement will depend in part on the results of previous measurements. This allows "compounding errors" to enter the picture, but these methods are still the most accurate that I have been able to determine (allowing for available equipment). Also note that I made use of my RF-1 to help measure some of the characteristics. At first this would seem to be circular logic—using an analyzer to determine the values of the characteristics of a transmission line, then using an equation based on those values to determine the accuracy of the analyzer. I'll explain in the following sections why this isn't as bad as it sounds.

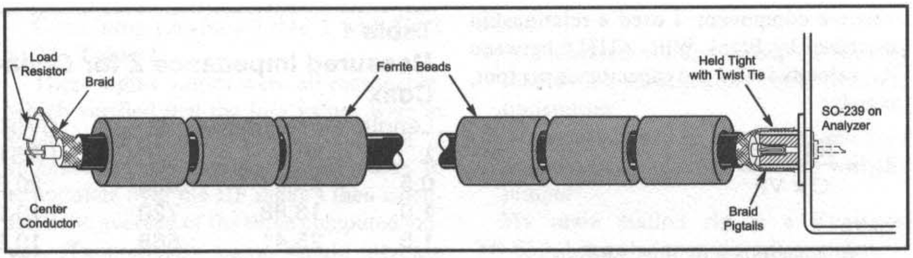

Fig 1—Details of input and load ends of the AC6LA test transmission line.

The Load Itself

The first thing needed was the value of the load itself. The termination of the transmission line was just a very short length (about ¼ inch) of exposed center conductor and a short pigtail of twisted braid, with either a single 100-Ω 1% precision resistor (RadioShack 271-309) or two 47-Ω 1% resistors in parallel (23.5 Ω) soldered directly between the center conductor and the pigtail with the smallest lead lengths possible. No connectors were used at the load end to eliminate any anomalies caused by their presence.

You may wonder why I bothered to use 1% resistors instead of just measuring the resistance of some junk box parts. Had I done that, I would have been relying on the accuracy of my digital multimeter without double-checking. When measured on my DMM the values were 99.8 and 23.6 Ω (after subtracting out the resistance of the test leads). These values are well within the 1% tolerance for the resistors and are also within the specified accuracy of the meter (±1% of reading and ±1 in the last digit). Since I had no way of knowing which values were "more correct," I chose to use the round numbers of 100 and 23.5. I also remeasured the resistors several times during the course of my testing to make sure that the heat of soldering and unsoldering did not change the resistance values. (It did not.)

In addition to the resistance of the load it was also necessary to account for the small amount of inductance produced by the short wire leads. I have a very nice LC meter[2] that has 1% accuracy and can measure the inductance of less than one inch of wire, but of course it can't measure such a low-Q inductor as one consisting of a 100-Ω (or 23.5-Ω) resistor in series with very short leads. I simulated the load inductance by bending a short piece of bare hookup wire into the appropriate shape and measuring its inductance. I also researched several formulas for calculating the inductance of a single-turn air-wound coil, although my "coil" was certainly not circular nor of uniform wire size. Considering both measured and calculated inductance, a value of 0.01 µH seemed reasonable. The spreadsheet computed what that would be in $+jX\,\Omega$ at any given frequency.

As with the load end, no PL-259 was used on the input end of the coax. This was done primarily so that I could make accurate measurements of the capacitance of the cable itself, as explained below, without worrying about the effect that the PL-259 would have on the measurement. The center conductor was shaped into a small loop that made a tight friction fit in the hole of the SO-239 on the analyzer. For the outer conductor I formed the braid into two equal and opposite pigtails. The pigtails were then placed on the outside of the instrument's SO-239 and held tightly in place with a twist tie. See **Fig 1**.

Since I had no connectors on the cable I took the opportunity to place about 12 inches worth of ferrite beads (type FB56-73) at each end. I did no before-and-after testing with the beads, and using them may not have been necessary. My reasoning was as follows: At the load end, the termination was actually a tiny antenna formed by the exposed center conductor, the resistor and the pigtail. I didn't want any current in the antenna to be able to travel back down the line on the outside of the braid (because the transmission-line equation does not account for that), so the beads there acted as a choke balun. At the input end, I didn't want any stray currents that might be induced on the outside of the line to perturb the measurements, so the beads there acted as a line isolator.

Velocity Factor and Characteristic Impedance

The next item of business was to determine the parameters of the transmission line itself, and the first step was to determine the physical line length using a tape measure. The measurement was made between the points on the line to where the braid had been peeled back. At the load end anything beyond that could be called "antenna" or "coil" but it wasn't transmission line. At the input end things weren't quite so simple, as I had to account for the SO-239 connector on the analyzer. (Fortunately each of the analyzers tested uses a similar UHF type connector, about 0.75 inches in total length.) After doing some research into the RF characteristics of an SO-239, I determined that it would be acceptable in my case to just add 0.75 inches to the length of the cable.[3] The measurement from braid to braid was 141.125 inches. Adding 0.75 inches for the connector on the analyzer and converting to the appropriate units resulted in an overall length of 11.823 feet.

I now had a precise physical line length, so I should now be able to determine the cable's velocity factor. There are a variety of ways to do this, most of which depend on finding a ¼-λ or ½-λ resonant frequency. I terminated the line with a short circuit (removing the load resistor and soldering the center conductor and braid pigtail directly together) and then found (with the RF-1) the lowest frequency at which the total Z value rose to a peak. This was the ¼-λ frequency. (A short-circuit termination at the load end of a ¼-λ line transforms to a very high, but not infinite for real lines, impedance at the input end.) This did make use of the RF-1 but only depended on the frequency (not the Z value) being accurate. I verified the frequency by listening to the analyzer output on a general-coverage receiver. (Harmonic content in the signal generated by the RF-1, as well as re-reflection from the measuring circuitry in the RF-1, might also effect this measurement; I have not quantified these factors.) With the ¼-λ frequency known, the velocity factor equation[4] can be arranged as follows:

$$\mathrm{VF} = \frac{\mathrm{L} \times \mathrm{F}}{983.5711 \times \mathrm{N}} \qquad \text{(Eq 1)}$$

where

L = physical line length, feet

F = frequency, MHz

N = number of electrical wavelengths

Substituting my values of L = 11.823 feet, F = 13.355 MHz and N = 0.25 gave VF = 0.642.

The next step was to determine the characteristic impedance (Z_0) of the line, which consists of a resistive part (R_0) and a reactive part (X_0). (Since Z_0 is the common term for characteristic impedance it will be used in the remainder of this article as a proxy for R_0, unless it is necessary to make a distinction between the two.) It is possible to calculate[5] the reactive component (which is frequency dependent), eliminating the need to measure it. That calculation was included in the spreadsheet. To determine the resistive component, I used a relationship described by Frank Witt, AI1H,[6] between Z_0, velocity factor and capacitance per foot, namely:

$$Z_0 = \frac{1016.703}{C \times VF} \qquad \text{(Eq 2)}$$

where

C = capacitance of line, pF/foot

VF = velocity factor

Using my LC meter, I measured the total capacitance of the (now open-circuit terminated) line to be 359.5 pF, being careful to lay the braid back along the outer jacket at both ends to reduce as much as possible any stray capacitance caused by the open end stubs. Dividing by the length of the line (141.125 inches) yielded 30.57 pF per foot. Substituting that number and the velocity factor into Eq 2 gave $Z_0 = 51.8\ \Omega$.

This result was verified with another technique—that of terminating the line with a resistor roughly equal to Z_0, and then measuring with the RF-1 the line input impedance at (approximately) the ¼-λ frequency. (The frequency is not at all critical because the impedance will change very slowly with a frequency shift.) Under these conditions the measured Z_0 value will be almost entirely resistive. This can then be checked by placing a known resistance of approximately the same magnitude across the input jack of the analyzer. The equation for this technique is:

$$Z_0 = \sqrt{Z_1 \times Z_2} \qquad \text{(Eq 3)}$$

where

Z_1 = termination impedance, Ω

Z_2 = measured impedance at the ¼-λ frequency, Ω

The Z_1 termination value was 49.9 Ω (a precision resistor that I had on hand) and the Z_2 reading with the RF-1 was 54 Ω. The RF-1 reading was then checked for accuracy by placing the same 49.9-Ω precision resistor across the input jack, noting that the RF-1 reading was then 50 Ω, and then making the assumption that an accurate reading at 50 Ω would also be accurate at 54 Ω (all at the same frequency). Substituting these Z_1 and Z_2 values in Eq 3 yields $Z_0 = 51.9\ \Omega$. However, since the Z_2 measurement could be made only to a precision of 1 Ω (with the RF-1), showing the result to a precision of 0.1 Ω is not justified. The best I could say was that this confirmed the results using capacitance per foot, so I used 51.8 Ω as the R_0 component of the characteristic impedance.

By rearranging Eq 2 this confirmed result ($Z_0 = 51.8\ \Omega$) was also used to confirm the velocity factor figure, again within the limits of the precision available. That is, substituting the Z_0 value and using the same pF/foot value in Eq 2 yields a VF of 0.642.

Table 1
Measured Impedance Z for Open-Circuit Termination of 37.9-Foot Coax

Length λ	Frequency MHz	Z Ω	SWR (@51.8 Ω)	Matched Loss dB/100 ft
0.5	8.391	1038	20.039	1.145
1.0	16.88	720	13.900	1.652
1.5	25.41	568	10.965	2.096
2.0	33.87	482	9.305	2.473

Summarizing so far: I determined the velocity factor VF using the physical line length and the frequency of the ¼-λ electrical length. I determined the R_0 component of the characteristic impedance Z_0 using the capacitance per foot of the line and the velocity factor. I confirmed this Z_0 using a completely different method that did not depend on either VF or pF/foot. Then I used this confirmed Z_0 value in a rearranged equation to confirm the original VF value.

Matched-Loss Attenuation

With Z_0 established, I could now turn my attention to the cable's matched-loss attenuation. It is very difficult to get good measurements for line loss using a short length of cable. Fortunately, I had a longer section (37.9 feet) from the same roll so I used that to ascertain attenuation. The initial technique used did depend primarily on the RF-1, but as I will show, the results of multiple measurements were both reasonable and consistent. Then the results were partially verified with another technique that does not depend on Z_0, described below. My goal was to obtain an accurate matched-line loss figure at 10 MHz, a widely used standard reference frequency when working in the HF range. This figure could then be compared to published data for RG-58, although you will recall that my intent was not to rely on published data.

Line attenuation can be determined by measuring the input SWR with either an open-circuit or short-circuit termination. (The fact that the SWR is not infinite with such a termination indicates that the line has losses.) However, for greatest accuracy two conditions must be met: the SWR meter must give reliable readings at high SWR levels, and the reference impedance of the SWR meter must be the same as the (complex) Z_0 of the line.[7] Since the SWR meter function of the RF-1 does not meet these criteria, I used a variation on this technique.

The 37.9-foot section was terminated with an open circuit, but instead of measuring SWR I measured the Z peak value at multiples of the ½-λ frequency. (Open-circuit termination transforms to a very high, but for real lines not infinite, impedance at multiples of ½ λ.) At multiples of ½ λ the impedance would be almost entirely a large R with only a very small X component, so (very nearly) R = Z and X = 0. With values at hand for R and X, and with Z_0 (actually R_0) known, the SWR could be computed as opposed to being measured.[8] The equations to calculate the magnitude of the reflection coefficient and then SWR are:

$$|\rho| = \sqrt{\frac{(R - R_0)^2 + X^2}{(R + R_0)^2 + X^2}} \qquad \text{(Eq 4)}$$

$$\text{SWR} = \frac{1 + |\rho|}{1 - |\rho|} \qquad \text{(Eq 5)}$$

Then the matched line loss in decibels can be calculated as:

$$\text{Loss}_{\text{ml}} = 10 \log \frac{\text{SWR} + 1}{\text{SWR} - 1} \qquad \text{(Eq 6)}$$

The computed numbers are more easily recognized as valid if they are converted to dB/100 feet, which in my case meant dividing by 37.9 and multiplying by 100. **Table 1** shows a summary of the results (with unwarranted extra precision that will be averaged out later).

Note that measurements were made at as many frequencies as possible, given the range of the RF-1. Those made at lower frequencies are likely to suffer less from various stray reactances, but since the Z value is higher there it is not as accurate. Just the reverse is true for measurements made at higher frequencies. Taking an average of multiple readings allowed me to average out any errors. (On the RF-1, Z accuracy degrades below 20 Ω and above 900 Ω. That is why I made measurements at ½-λ frequencies with an open-circuit termination and not at odd multiples of the ¼-λ frequency with a short-circuit termination. Either should work in theory, but the latter will result in higher, and therefore less accurate on the RF-1, Z readings.)

As a last step in this technique I needed to make a few more calculations concerning attenuation. The transmission-line equation requires a matched-line loss value for any given frequency of interest. It is not practical to supply these numbers explicitly at all frequencies, so one common technique (but not the only method) is to provide a loss figure at one standard frequency (such as 10 MHz when dealing with the HF range) and then calculate what the attenuation would be at any other frequency. That equation involves an exponent, denoted using the Greek lower case letter sigma (σ):

$$\text{Loss}\left(f\right) = \text{Loss}_{ref}\left(\frac{f}{f_{ref}}\right)^{\sigma} \qquad \text{(Eq 7)}$$

where

Loss(f) = matched line loss at a frequency of interest

Loss_{ref} = matched line loss at a reference frequency

f = frequency of interest

f_{ref} = frequency of the reference (such as 10 MHz)

Many publications concerned with transmission lines include graphs showing attenuation versus frequency for various types of line. The slope of the plotted lines that appear in these graphs is related to the value of sigma. For most transmission lines sigma is usually in the range 0.5 to 0.6, for frequencies in the HF spectrum. Since an exponent of 0.5 is equivalent to the square root, that is another way of saying that in the HF range the loss changes at just slightly greater than the square root of the frequency change. And that makes sense, because at HF the loss is dominated by the skin effect of the conductors, and the skin effect varies as the square root of the frequency. The exponent is usually just slightly greater than 0.5 because dielectric (insulation) losses, although minor at HF, are still present.[9]

Assigning a particular value to sigma is necessary as discussed above to allow a reference loss figure to be extrapolated to any frequency of interest (which the spreadsheet does), but I made an additional use of this exponent as well. Knowing what is a reasonable value for sigma allows me to double check any attenuation measurements I've made, so long as I measured losses at more than one frequency. If the sigma between two sets of measurements is not reasonable, then I have to assume that at least one of the measurements was inaccurate.

Rearranging Eq 7 shows that:

$$\sigma = \frac{\log \dfrac{\text{Loss}\left(f_1\right)}{\text{Loss}\left(f_2\right)}}{\log \dfrac{f_1}{f_2}} \qquad \text{(Eq 8)}$$

where

$\text{Loss}(f_1)$ and $\text{Loss}(f_2)$ are the loss values at any two different frequencies

f_1 and f_2 are the respective frequencies, MHz

Combining previous Table 1 with Eq 8 yields **Table 2**.

These sigma values were all reasonable, which verified that the loss values were at least approximately correct.[10] Since I intended to use a single sigma value to extrapolate over the HF range I then calculated the average of the three computed values. (Theoretically sigma should increase slightly with increased frequency as shown, but my instrumentation does not justify three digits of precision.) Then I used the average sigma of 0.56 to calculate (using Eq 7 with reversed semantics) what each loss value would be at a reference frequency of 10 MHz. Finally I averaged (hopefully "averaging out" any errors) these four reference values to end up with 1.25 dB per 100 feet at 10 MHz, as shown in **Table 3**.

To confirm this number, I used a completely different technique that does not depend on Z peak readings or ½-λ frequencies. I used my main station rig to transmit into a dummy load and measured (with a Fluke 85 RF probe) the voltage drop across the dummy load resistor, before and after inserting the line under test into the circuit. The power output of the transmitter was adjusted such that the measured voltages would be in the upper end of the Fluke range (around 20 volts, or about 8 W into a 50-Ω load) to avoid any non-linearity problems with the rectifying diodes in the probe. And because I could safely do so at these low power/voltage levels, I removed the cover from the dummy load so that I could take direct measurements across the resistor. (This would not be wise at higher power. At 100 W the RF voltage across a 50-Ω load would be about 70 V, perhaps enough to give you a little bite if your fingers slipped.) The equation for this technique is:

$$\text{Loss}_{ml} = 20 \log \frac{V_1}{V_2} \qquad \text{(Eq 9)}$$

where

V_1 = measured voltage across the dummy load with a short jumper cable from the transmitter

V_2 = measured voltage across the same load with the line under test in series with the jumper

My main station rig is a Kenwood TS-850. Like all (unmodified) commercial rigs, it can only transmit in (or very close to) the ham bands. Hence I was not able to take measurements at exactly the same frequencies as with the RF-1. But I was able to take multiple measurements and then again average out any errors. Table 4 shows a summary of the results, with the loss figures converted to dB per 100 ft and the final column showing what each loss value would be when converted back to the standard 10 MHz using the average sigma.

At first I was a little disappointed in these 10-MHz numbers, hoping that they would be more consistent and also coincide more closely with the results of the previous RF-1 based technique. (It is probably just a most unlikely coincidence that the two average sigma values are so close.) Further reflection showed some reasons for the differences. First of all, although I could read the voltages to a *precision* of 0.01 V on my DMM, the *accuracy* was not sufficient. For example, using the V_2 reading at 2 MHz from the table above, had the voltage been just 0.04 V higher at 20.49 instead of 20.45 (a difference of only 0.2%, well under the 1% accuracy of the DMM), the computed matched loss would have been 0.542 dB, leading to a 10-MHz value of 1.314. That's a 7% change in the 10 MHz dB value based on only a 0.2% change in a voltage reading. Eq 9 uses 20 times the log of a voltage ratio, magnifying any small errors in the voltage readings.

Another source of error comes from using a less than perfectly matched dummy

Table 2

Loss dB/100 ft	*Frequency MHz*	*σ, From Previous Frequency*
1.145	8.391	—
1.652	16.88	0.525
2.096	25.41	0.582
2.473	33.87	0.575
		0.56 Average

Table 3

dB/100 ft	*Frequency MHz*	*dB/100 ft at 10 MHz (Using Average σ)*
1.145	8.391	1.263
1.652	16.88	1.232
2.096	25.41	1.243
2.473	33.87	1.249
		1.25 Average

Table 4

Frequency	*V_1*	*V_2*	*dB/100 ft*	*σ*	*at 10 MHz*
2.000	20.98	20.45	0.586	—	1.420
10.000	20.96	19.79	1.316	0.503	1.316
21.000	20.07	18.43	1.954	0.533	1.299
28.000	19.50	17.62	2.323	0.601	1.319
Averages				0.55	1.34

load. A mismatch at the load causes standing waves to appear on the line, which in turn cause the measured loss values to be inflated. My dummy load (an inexpensive MFJ 300-W model) measures 52.0-Ω DC resistance. In this case some "what-if" analysis with the transmission-line equation and related power and voltage equations showed that this is not enough of a mismatch to make a significant difference. (This of course assumes that the 52.0-Ω measurement is accurate and ignores any stray reactance that may also be present in the load.)

A final possibility that must be considered rests with the assumptions made when determining the decibel loss by means of a voltage ratio (as opposed to using the ratio of line input power to line output power). I assumed that the voltage drops are measured across exactly the same impedance. This was true in my case, since I measured across the dummy load for both V_1 and V_2. I also assumed that the output power of the transmitter is exactly the same for both measurements. The V_1 reading was taken with the transmitter "looking into" about 3 feet of RG-58 jumper cable (assumed Z_0 of 51.8 Ω) attached to a load of (perhaps) $52.0 + j\,0$ Ω. At 10 MHz (for example) that would present an SWR level of 1.048 to the transmitter. With an additional 37.9 feet of cable spliced in to take the V_2 reading the SWR level at the transmitter would be 1.053. (Both of these SWR numbers are based on a 50-Ω resistance reference, which I assume is what the transmitter power foldback monitor is using.) It seems very unlikely that the power output would change with such a minor difference in the load presented to the transmitter, but I lack the equipment to monitor the power to such a precise level.

Based primarily on the imprecision of the voltage measurements, I decided to stay with the RF-1 technique results of 1.25 dB/100 feet at 10 MHz. As it turns out this value compares very favorably with published numbers for RG-58. But it is important not to mix apples with oranges in doing the comparison. RG-58 is produced with both solid and stranded center conductors and there is a difference in the matched-line loss between the two. One commonly quoted loss figure for RG-58 is based on the published specs for Belden 8259, but that is not a good comparison in this case because Belden 8259 has a stranded center conductor, whereas RadioShack RG-58 has a solid center conductor.

A better choice for comparison would be Belden 9201, and the Belden web site (**www.Belden.com**) shows a 10-MHz matched line loss of 1.2 dB/100 feet. Another good comparison is with Wireman 125, and the published catalog figure for that cable is 1.3 dB/100 feet. Of course it would be nice to know the published spec for RadioShack RG-58 at 10 MHz, but I could not find such a number at that frequency. However, published numbers for "Tandy Wire & Cable RG-58" (as the RadioShack cable is marked) are 2.9 dB at 50 MHz and 4.1 dB at 100 MHz. When these two reference points are used to extrapolate back to 10 MHz, the result is 1.3 dB.

Does all of this worrying about a few hundredths of a dB matter? In a word, no. I created a spreadsheet to see what the difference would be in the theoretical target curves assuming that I had made minor mistakes in determining the characteristics of the transmission line (attenuation as well as all the other inputs to the transmission-line equation). For all frequencies between 2 and 30 MHz, a change in matched line loss from 1.2 to 1.3 dB/100 feet results in a maximum difference in the computed R, X and Z values of just 0.34 Ω. That's the maximum, which occurs between 10 and 16 MHz with the 23.5-Ω load. At other frequencies, and with the 100-Ω load, the difference is even less.

That completed the measurements of the load and the characteristics of the transmission line. Now I was confident that the theoretical computed $R \pm j\,X$ values produced by the transmission-line equation were accurate, and could be used as valid targets for comparison to the measured values obtained from each of the analyzers.

TEST RESULTS FOR THE MFJ 259B

The MFJ 259B is a very popular device, so I'll present the test results for it first. I made measurements from 2 through 30 MHz, in increments of 1 MHz, first with a 100-Ω load and then with a 23.5-Ω load (assuming 0.01 µH of series inductance for each). I read all measured values from the digital display on this instrument; I paid no attention to the two analog meters. Since the 259B does not provide a sign for the X value, I just forced the sign to equal the sign of the theoretical X at any given frequency for charting and comparison purposes.

Figs 2A and 2B show the measured values, compared to the theoretical high- and low-Z target values. These charts employ a 3:1 SWR as the outer boundary and give a good overall impression of the accuracy of the measurements.

Another way of showing impedance is to display the total scalar value (Z) instead of the R and X components, plotted together with the theoretical and measured SWR. See **Fig 3**. For some (perhaps all) of the analyzers tested, Z is measured directly and thus may be more accurate than other (derived) items.

Note that the theoretical target SWR is computed based on a 50 Ω pure resistance reference, which is the same used by most ham SWR meters. As expected, the target SWR curves have a slight downward trend with increasing frequency due to the line attenuation. They also show a distinct cyclic pattern caused by using a non-reactive 50-Ω reference for calculation, as opposed to using the actual coax's complex Z_0. Thus the target curves do *not* indicate the "true" SWR on the line, but *do* indicate exactly what a 50 Ω SWR meter should show.[11]

THE AUTEK RF-1

This was the first analyzer for the ham market that made it convenient to measure the magnitude of impedance (Z) as well as SWR. However, since the RF-1 does not include a display of R and X directly you must calculate the values using the SWR (50-Ω reference) and Z measurements, as follows:[12]

$$R = \frac{\left(2500 + Z^2\right) \times SWR}{50 \times \left(SWR^2 + 1\right)} \tag{Eq 10}$$

and then

$$X = \pm\sqrt{Z^2 - R^2} \tag{Eq 11}$$

Note that the sign of the reactance is not explicitly determined. Further, because of the way in which X is determined, the accuracy is degraded in situations where the magnitude of X is small compared to the magnitude of R. Although I did not do it for these tests, a handy work-around in that case is to just add approximately $1/8$-λ of transmission line. This will have the effect of changing X from near zero to near its maximum positive/negative value, thus making it easier to get accurate results. (This trick would apply to any analyzer, not just the RF-1.)

Fig 4 shows the results for the 100-Ω load case. To save space the 23.5-Ω case for this and the remaining instruments tested will not be shown, although complete results are available (see below). As with the 259B, the sign of the measured (in this case derived) X was forced to match the sign of the theoretical value.

THE AUTEK VA1

The VA1 has some very nice features. It can show SWR based on different reference values (50 Ω, 52 Ω, 75 Ω, etc.) It can also compute what the measured impedance would be when rotated back to the antenna feed point. (It assumes ideal line to do this, which is quite acceptable in most situations.) I found the Autek user manual to be very well written, explaining clearly both the operation of the instrument and several practical applications. Unfortunately, the test results were somewhat disappointing, as shown in **Fig 5** for the 100-Ω load.

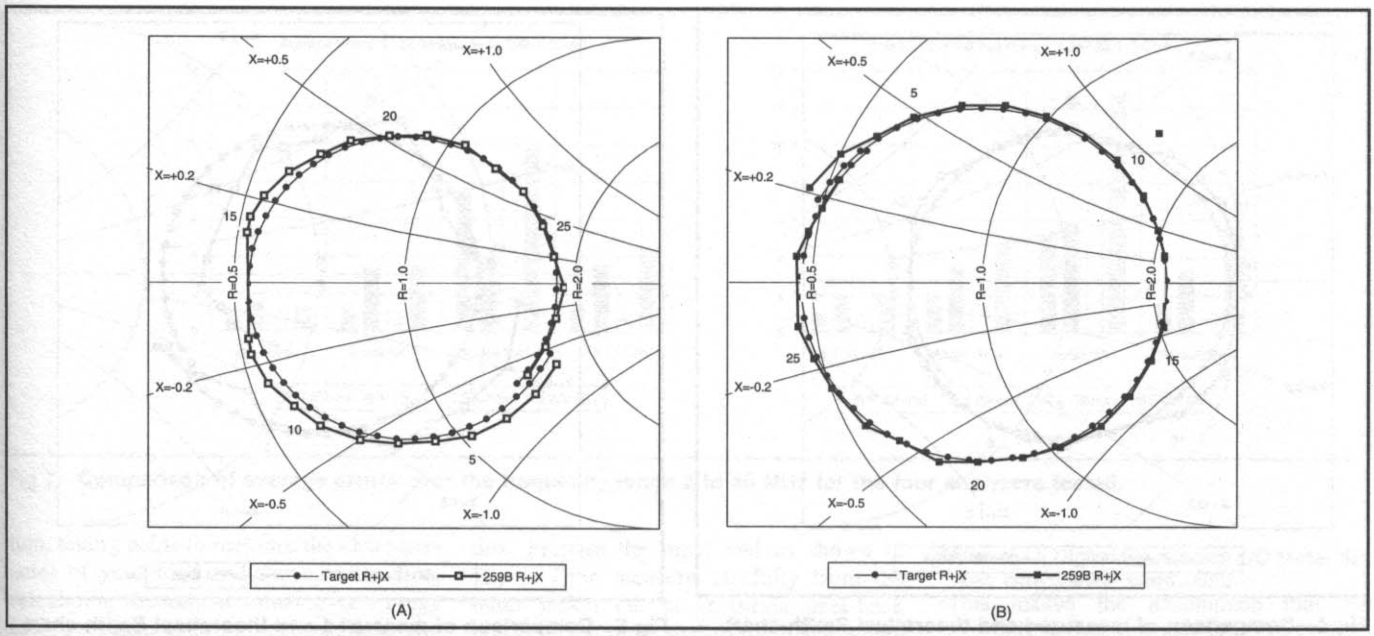

Fig 2—At A, comparison of measured and theoretical Smith-chart plots versus frequency for MFJ 259B SWR Analyzer for 100-Ω load at end of 11.823 feet of RadioShack RG-58 coax. At B, comparison for 23.5-Ω load.

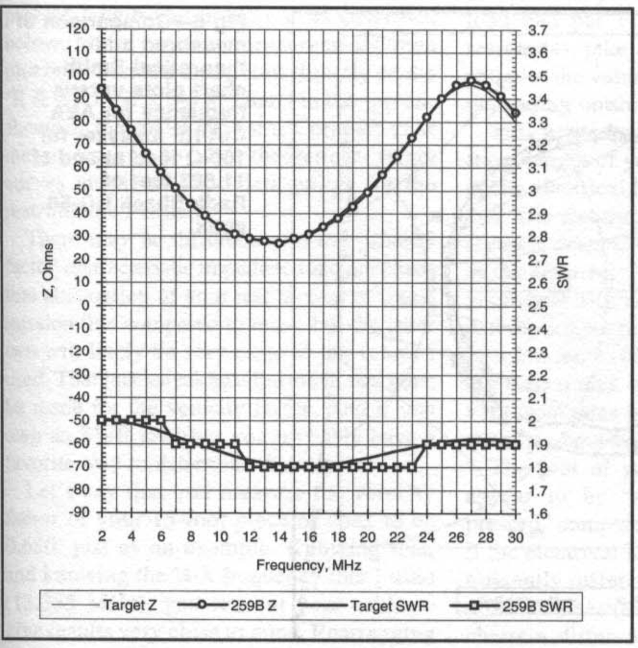

Fig 3—Comparison of measured and theoretical impedance magnitude and SWR values versus frequency for MFJ 259B SWR Analyzer for 100-Ω load at end of 11.823 feet of RadioShack RG-58 coax. Note that the resolution of SWR was to one-tenth decimal places, giving the "granular" look seen at the bottom of the plot. This affects the computation of R and X components of impedance Z.

Unlike the 259B and RF-1, the VA1 displays the sign of X. Of the 58 measurements made (29 with the 100-Ω load and 29 with the 23.5-Ω load), 52 showed the correct sign. This is a very good percentage, but of course a user would have no (convenient) way of knowing if the sign were correct for any given measurement. (The sign of X was incorrect at one "near zero crossing" frequency with both loads. With the 100-Ω load, the sign was also consistently, and repeatably, incorrect at all frequencies between 27 and 30 MHz.)

Again, I decided to present the test results as if the sign of X had been correct, because to do otherwise would needlessly obscure the results. For example, if the VA1 reading for X at a particular frequency was +17 Ω and the target value was –15 Ω, it would do no good to say that the VA1 was off by 32 Ω in that case. Instead, I chose to plot and compare X values as if the sign were always correct, as was done with the 259B and RF-1.

THE AEA CIA-HF

This instrument is unique in being able to display the results from a frequency-sweep set of measurements. In addition, software is available[13] to control the device from a PC, to download measured data points and to create a variety of charts. This is also the only instrument of the four tested that has a resolution of 0.1 Ω for R, X and Z. Like the Autek VA1, the resolution for SWR is 0.01. **Fig 6** shows the test results for the 100-Ω load.

The CIA-HF displays the sign of X (indirectly, as a phase angle) but I found it to be completely unreliable. Mostly it was shown as a positive phase angle, even though approximately half of the test points should have indicated negative. In addition, results were not repeatable with repeated tests. Some test frequencies that showed a negative sign at first would show a positive sign when the measurement was repeated a few minutes later. It became very frustrating trying to keep track of the sign of X. After trying and failing several times to get repeatable results, I finally gave up recording the sign. (On the other hand, the absolute value of the X readings was very repeatable.) As with all the other instruments, test results are shown as if the sign had been correct.

CAVEATS, AVERAGE ERRORS AND ADDITIONAL COMMENTS

The resolution for R, X and Z is 1 Ω on all of the analyzers tested, except the CIA-HF. If there was any jitter in the display, I just recorded what seemed to be the predominant value, as opposed to doing any interpolation. Considering these two points, plus taking into account the accuracy with which I was able to measure the various input parameters to the transmission-line equa-

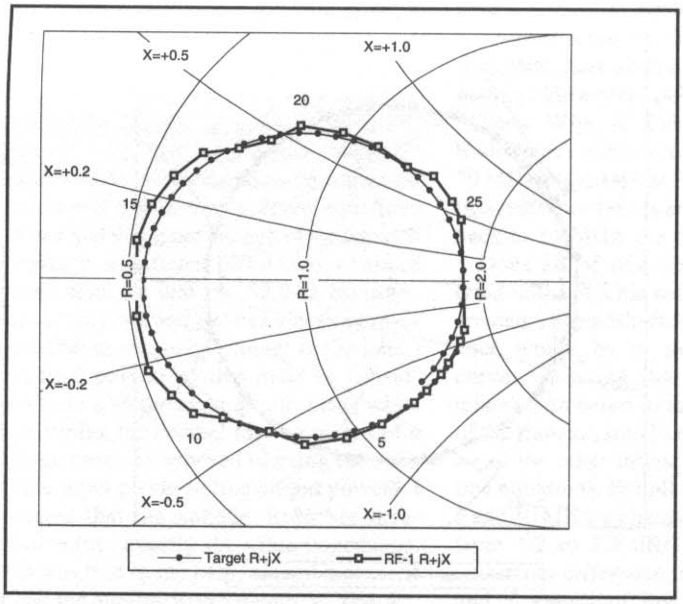

Fig 4—Comparison of measured and theoretical Smith-chart plots versus frequency for Autek RF-1 analyzer for 100-Ω load at end of 11.823 feet of RadioShack RG-58 coax.

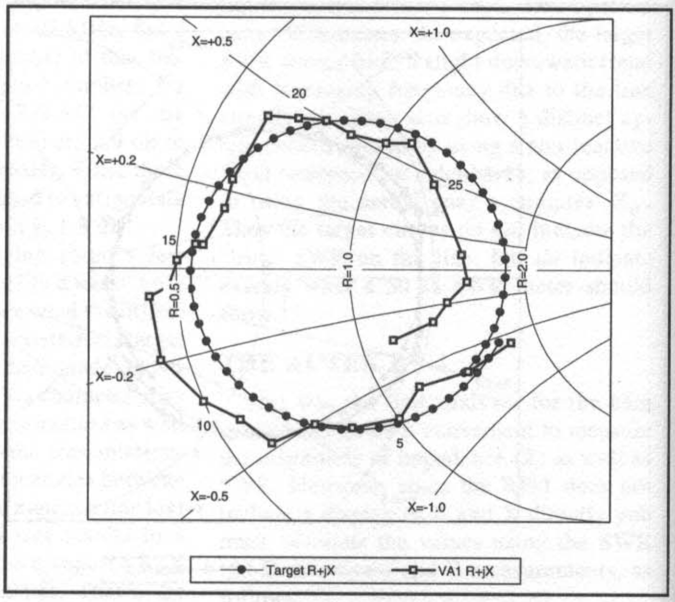

Fig 5—Comparison of measured and theoretical Smith-chart plots versus frequency for Autek VA1 analyzer for 100-Ω load at end of 11.823 feet of RadioShack RG-58 coax.

tion, any discrepancy between theoretical and measured values of less than 1 or 2 Ω is probably meaningless.

I must emphasize that my sample size for each of the analyzers tested was precisely one, and hence the test results shown here may not be representative of the accuracy of each model. Since each unit no doubt undergoes at least a small amount of hand assembly and hand adjustment, it is possible that I happened to test a particularly good (or bad) sample.

Also, the firmware for each device is subject to revision by the manufacturer. (The units I tested were at the following levels: 259B 'Ver 2.02'; RF-1 'PC2.2'; VA1 '9901'; CIA-HF 'Ver 2.0'.) Furthermore, these tests only included one SWR level (approximately 2:1). Results may vary for other SWR levels, which is why the charts shown in this article should probably not be used as general calibration curves.

With these points in mind, refer to **Figs 7A** and 7B. These show the average errors (absolute Ω for R, X, and Z; percentage for SWR) over the 29 test frequencies for each load. For the VA1 and CIA-HF, keep in mind that the "average error" for X does *not* include the fact that the *sign* of X was shown incorrectly in some cases.

So far as I know, no circuit diagrams or detailed descriptions of the theory of operation are available for any of the instruments.[14] For the Autek devices the user manual explicitly states which items are measured directly and which are derived using the onboard processor. For the others, that distinction is not made clear, although for some items the derivation is obvious. For more information on each of these analyzers I would suggest visiting the individual manufacturer's web site.[15]

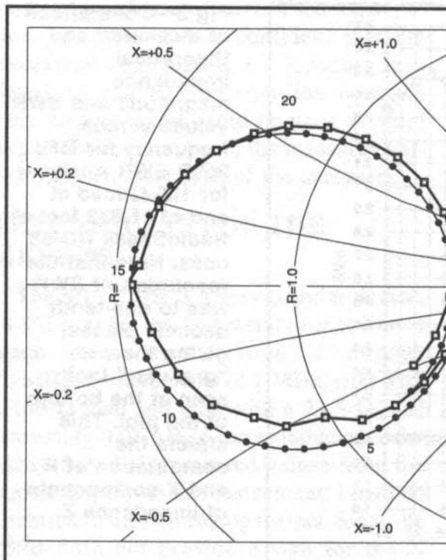

Fig 6—Comparison of measured and theoretical Smith-chart plots versus frequency for AEA CIA-HF analyzer for 100-Ω load at end of 11.823 feet of RadioShack RG-58 coax.

COMPLETE TEST RESULTS AND RELATED SOFTWARE

I created two separate worksheets, one for the 100-Ω load and a second for the 23.5-Ω load. Each sheet contains the computed theoretical values (at 0.5 MHz intervals to smooth the curves), plus the measured data for each of the analyzers tested. I created other worksheets to study the effect of minor changes in the test environment or minor differences in the methodology used to compute the theoretical target values. These *Excel* spreadsheets can be downloaded from the ARRLWeb site **http://www.arrl.org/notes/8608.**

TESTING YOUR OWN ANALYZER

If you own one of the analyzers mentioned in this article perhaps you would like to perform similar tests on it, perhaps by duplicating what I've discussed here. Create a spreadsheet (or use mine) with the hyperbolic tangent transmission-line equa-

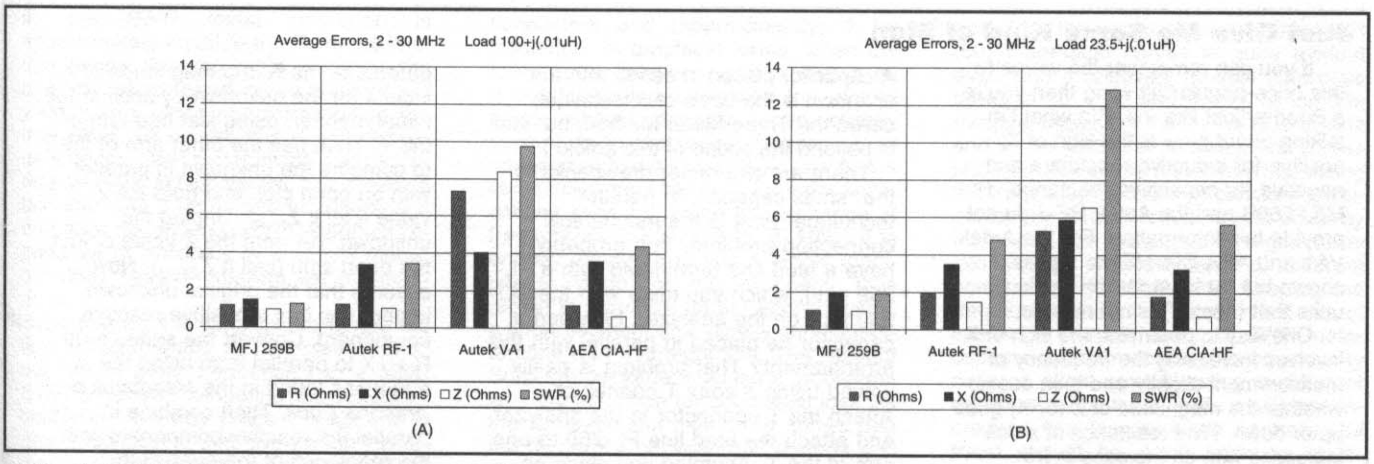

Fig 7—Comparison of average errors over the frequency range 2 to 30 MHz for the four analyzers tested.

tion, taking pains to measure the characteristics of your load and transmission line, calculating theoretical values over a range of frequencies, entering your test data, and then plotting various charts.

A simpler way is just to go to RadioShack and buy a package of 1% resistors and about 15 feet of bulk RG-58. Cut the line to a precise length and prepare it as described below. Make your test measurements, then plot the measured data points directly on the 'R & X' or 'Z & SWR' charts in the spreadsheets on the ARRLWeb site. Compare your measurements to the theoretical target curves and ignore the data points for the instruments I tested.

There may be differences in the velocity factor, characteristic impedance and matched-line attenuation of your test section of transmission line compared to mine, but the latter two will likely be very close to the values I used. That just leaves an adjustment that must be made for the velocity factor. And if you own an SWR analyzer you probably have a favorite way to determine that number.

Let's say that you measure the velocity factor of your 15-foot piece of coax to be 0.650, just as an example. Knowing that, and knowing the ¼-λ frequency that I used (13.355 MHz), you can cut your cable to give results very close to mine. Rearranging the velocity factor equation yields:

$$L = \frac{983.5711 \times N \times VF}{F} \qquad \text{(Eq 12)}$$

where

N = number of electrical wavelengths (= 0.25)

VF = velocity factor (= 0.650, your cable)

F = frequency, MHz (= 13.355, my charts based on this)

so

L = 11.968 feet, but minus 0.75 inches (0.063 feet) for the connector on the analyzer,

L = 11.905 feet = 11 feet 10⅞ inches.

Cut your cable a few inches longer than this. Prepare the input end as shown in Fig 1. Then measure carefully from the outer jacket cut point (braid peel-back point) at the input end to the place where the outer jacket should be cut at the load end. Mark this point, cut the coax itself about ½ inch beyond this, remove the outer jacket to the point marked, and prepare the load end per Fig 1. Solder on the load resistor(s), take a series of measurements and plot the values on the appropriate chart depending on the load.

This procedure works because the electrical length of your cable is now the same as the electrical length of the cable I used, and it is electrical length that is the main factor in determining how R and X will vary as the frequency varies. Even if the Z_0 of your cable differs by a few tenths of an ohm and the attenuation per hundred feet differs by a few tenths of a dB (even in compounding directions), the theoretical results will vary from mine by less than 2 Ω for all frequencies between 2 and 30 MHz.

The plot of your measured points will appear to be "stretched out" or "compressed" compared to the theoretical curves if the electrical length of your cable is significantly different, perhaps because of an error in measuring or cutting. (On Smith charts a different electrical length would cause the plot to appear "wound up" or "unwound" compared to the theoretical curve.) If you are confident in the value you used for velocity factor yet the measured results do not match the theoretical curves, you may start to wonder about the source of the difference. And you may then want to see how accurately you can measure the other parameters of your test environment to see if they differ from those I used. And you will have a lot of fun doing so!

References and Notes

[1] Wilfred Caron, "The Hybrid Junction Admittance Bridge," *The ARRL Antenna Compendium Vol 3*, pp 223-230.

[2] Almost All Digital Electronics L/C Meter IIB, see **http://www.aade.com/**.

[3] This makes the assumption that the velocity factor, characteristic impedance, and attenuation properties of the SO-239 are equivalent to 0.75 inches of the RG-58 that I used. At 30 MHz and lower this is approximately correct. Calculating the impedance transform through 0.75 inches of RG-58 versus the impedance transform through (an estimation of) an SO-239 shows the difference (at 30 MHz) to be less than I could possibly measure or detect with the equipment at hand. This may not be the case at higher frequencies where the impedance "bump" of a UHF type connector starts to have a noticeable effect. For more information, see **http://minyos.its.rmit.edu.au/~rmmca/pl259tst.html** and **http://www.berkshire.net/~robbins/technote/connloss.html**.

[4] Unless otherwise noted, all equations used in this article may be found in *The ARRL Antenna Book*. The constant used in Eq 1 is derived from 299.792458 × 10^6 meters/sec (speed of light) divided by 0.3048 meters/foot.

[5] Charles Michaels, "Complex Transmission Line Characteristic Impedance—How Important Is It?" *QST*, Nov 1997, pp 70-71. The method described by Michaels (and previously by others) yields a good approximation for X_0 at frequencies in the HF range and is quite adequate for this application. See references 6 and 9 for a more rigorous method. A worksheet (included in the Related Software package) was created to study the effect of calculating X_0 with the two different methods. The theoretical target curves only changed by a minor amount (less than a few tenths of an Ω at most points), so the simpler method was used.

[6] Frank Witt, "Transmission Line Properties from Measured Data," *The ARRL Antenna Compendium Vol 6*, pp 184-188. The constant used in Eq 2 is the reciprocal of the speed of light constant used in Eq 1, with the decimal point moved to allow for capacitance in pF.

[7] In reference 6, Witt describes a (partial) way around the latter restriction. SWR meters usually have just a simple resistive reference, such as 50 + *j* 0 Ω. If (and only

Just Give Me Some Kind of Sign

If you can remember the words to this once-popular hit song then you're a Boomer just like me. But what I'm talking about here is the sign of X, positive for inductive reactance and negative for capacitive reactance. The MFJ 259B and the Autek RF-1 do not provide this information. For the Autek VA1 and AEA CIA-HF the sign is shown but (at least for the particular units that I tested) is not reliable.

One way to determine the sign of X involves increasing the frequency of measurement slightly and then seeing whether the magnitude of Z (or X) goes up or down. (The reactance of a coil increases with an increase in frequency, the reactance of a capacitor decreases as the frequency goes up.) But for the typical case of measuring impedance at the input end of a transmission line connected to an antenna, this method may produce misleading results. When measured through a transmission line, the change in Z (or X) with increasing frequency will depend on the electrical length of the line, the value of the resistive part of the antenna feed-point impedance as compared to the Z_0 of the line, and by how much the feed-point impedance changes with frequency.

This can best be illustrated with a practical example. Using *EZNEC* (**www.eznec.com**) I modeled an 80-meter dipole at 50 feet above real ground. The antenna was adjusted to be resonant at precisely 3.75 MHz, at which point *EZNEC* showed a feed-point impedance of $72.4 + j0\ \Omega$. I then used the Frequency Sweep capability to calculate the feed-point impedances in the range of 3.5 to 4 MHz, in 0.01 MHz steps. I transferred the $R \pm jX$ sets into a spreadsheet, where the impedance transforms were calculated for 50 feet of RG-213, chosen as just a typical length and type of feed line.

Fig A shows R, X and Z at the antenna feed point. The sign of X is positive at points where the magnitude of Z (or X) increases with slightly higher frequencies, and negative where the Z magnitude decreases. But at the input end of 50 feet of RG-213 things are not so clear. As **Fig B** shows, in this case you would be hard pressed to determine the sign of X based on a change in magnitude of Z (or X) with increasing frequency.

The RF-1 manual offers an alternative that does not involve changing the frequency of measurement. The sign of X can be determined by placing a small capacitor in parallel with the impedance being measured and noting whether Z increases or decreases. (Actually the extra reactive component can be either inductive or capacitive and can be placed in either series or parallel with the unknown impedance. A capacitor placed in series with the unknown is the basis of a technique called the Three-Meter Method, but that is beyond the scope of this article.)

There are two minor drawbacks to the "small capacitor in parallel" technique. First is the mechanical connection problem. You probably have a feed line terminated with a PL-259 plug, which you mate with the SO-239 jack on the analyzer. How can a capacitor be placed in parallel with this arrangement? That problem is easily solved using a coax T connector. Attach the T connector to the analyzer and attach the feed line PL-259 to one arm of the T. Anything you place on the other arm of the T will be in parallel with the unknown.

The second problem involves the size of the capacitor. The capacitor must be large enough to produce a noticeable change in the magnitude of Z, but not so large such that when combined in parallel with a small positive X the result goes through zero and becomes negative. In general it is very awkward to place slightly larger and larger capacitors across the arm of the T connector, stopping when a just noticeable change is produced in the Z magnitude value.

There is a way around this touchy procedure. First of all, don't use actual capacitors. Instead, use an open-ended length (stub) of coax cable. Most ham shacks have a variety of short jumper cables handy, complete with convenient PL-259's for easy mating with the arm of the T connector. And don't worry whether the amount of capacitive reactance is too big or too small. As long as plugging in the parallel stub produces a noticeable change in the initial measurement, and you have a computer or programmable calculator to do some number crunching, it doesn't matter.

The technique is as follows: First determine the R and magnitude of X values for the unknown by itself in the usual manner, using just one arm of the T. Then use the other arm of the T to combine the unknown in parallel with an open stub and note the Z value (call it Z_{PAR}). Unplug the unknown and note the Z value of just the open stub (call it Z_{STUB}). Now assume that the original unknown impedance has a positive reactive component. Convert the series form $R + jX$ to parallel form using the equations found in the *Handbook* or *Antenna Book*. Then combine in parallel the reactive component with the reactance of the open stub, (negative) Z_{STUB}. Convert the result to total impedance and call it Z_{POS}. Repeat the calculations assuming that the original unknown impedance has a negative reactive component. (Convert $R - jX$ to parallel form, combine with Z_{STUB}, and then convert to total impedance.) Call the result Z_{NEG}. Either Z_{POS} or Z_{NEG} will be very close to Z_{PAR}, thus indicating whether the unknown has a positive or negative sign for X.

This sounds complicated (it took longer to *describe* than it takes to *do*) but in reality is just attaching and removing a PL-259 and punching some numbers into a computer program. (A BASIC version is included in the Related Software package available for download at **http://www.arrl.org/notes/8608**.) The only constraint is that you must know whether the open-ended jumper cable used as a stub is shorter than ¼ λ (and thus known to have capacitive reactance) or longer than ¼ λ (inductive reactance). To keep things simple I always use capacitive stubs. For coax with a nominal velocity factor of 0.66, that means shorter than about 5 feet at 30 MHz and less than about 16 feet at 10 MHz.

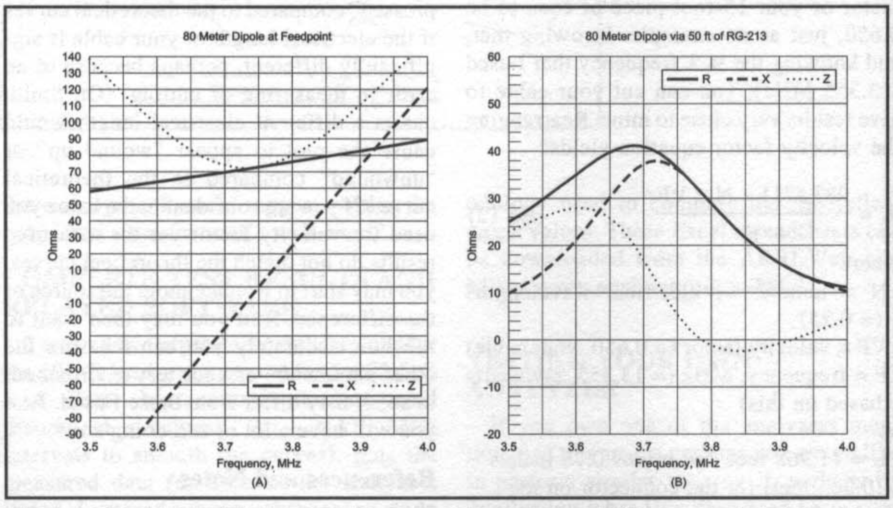

Fig A—At A, the resistance, reactance and impedance at the feed point of an 80-meter dipole. At B, the resistance, reactance and impedance at the input of 50 feet of RG-213 coax feeding the same dipole.

if) the SWR meter reference is approximately equal to the R_0 of the line, then using the geometric mean of the open-circuit and short-circuit readings will yield a very close approximation to the true SWR. Of course this is still dependent on the SWR meter giving (two) accurate readings at high values. See the main text and note 8 for an alternate approach that does not depend on the reference impedance or accuracy of an SWR meter, but does have a different set of limitations.

[8] Notice that Eq 4 is simplified to ignore the line X_0 component. At multiples of $\frac{1}{4}\,\lambda$, but not at other frequencies in a high-SWR situation, computing the reflection coefficient this way yields a result that is nearly identical to that given when including X_0 in the calculation. Hence the SWR computed via Eq 5 (at these frequencies only) will be nearly identical to the true SWR on the line (assuming accurate Z readings), and may be used to calculate accurate loss figures per Eq 6. (The Related Software package includes a chart that shows the true SWR and various approximations for open- and short-circuit terminations.) Also note that it is actually not necessary to compute the SWR. The return loss may be determined directly from the reflection coefficient as $20 \log(1/|\rho|)$, and the matched line loss is ½ that amount or $10 \log(1/|\rho|)$. The extra step was included to show the high SWR levels involved.

[9] Both Witt (Frank Witt, "Transmission Line Properties from Manufacturer's Data," *The ARRL Antenna Compendium Vol 6*, pp 179-183) and Sabin (William Sabin, "Computer Modeling of Coax Cable Circuits," *QEX*, Aug 1996, pp 3-10) give nice explanations of why the loss should really be computed as the sum of two components, one for conductor loss and one for loss due to insulation. Each of these components has a different frequency dependent exponent, 0.5 (square root) for conductors and (approximately) 1 for insulation. In graphical terms, when the loss versus frequency plot is shown on a chart with log-log scales the plotted points should actually curve slightly upward (with increasing frequency) as opposed to being in a straight line with a constant slope. However, for most applications over any given limited range of frequencies (such as 2 to 30 MHz) it is entirely adequate to use a single (composite) value for the exponent, thus (again in graphical terms) approximating a short segment of a slightly curved plotted line with a straight line. The Related Software package includes a worksheet with the algorithm for computing loss via the two-exponent method. It shows that the difference between that method and the simpler one-(composite)-exponent method (over the HF range) is very minor, on the order of 0.01 dB at the mid-point between two reference points.

[10] A reasonable sigma value rules out any gross random errors in the loss measurements, but does not eliminate any systematic bias. For example (and approximately), if all of the Z readings were in error by 10% in the same direction (eg, higher) then the computed sigma values would still be the same but the attenuation figures would be in error by 10% (lower). Sharp-eyed readers will also note that there is an inconsistency in the frequencies, in that the second frequency is just slightly greater than two times the first, and the third is greater than three times the first, etc. This implies that the velocity factor is creeping slightly upward with increasing frequency, and in fact that is the case. Because of skin effect, the inductance of the line per unit length decreases slightly with increasing frequency. And because the velocity factor is inversely related to the inductance, velocity factor increases with increasing frequency. This small change in velocity factor does not change the computed matched-line attenuation figures by any significant amount.

[11] Note that the cyclic pattern of the SWR (50) theoretical curves is quite evident even with a relatively modest difference between $50 + j\,0$ and the Z_0 of the line (ranging between $51.8 - j\,1.5\ \Omega$ at 2 MHz and $51.8 - j\,0.5\ \Omega$ at 30 MHz). The curves shown in this article result from increasing the frequency on a line of constant physical length. Similar results would occur by increasing the line physical length (or by taking SWR measurements at different points along the line) while keeping the frequency constant. You may find this of interest if you are using an SWR meter capable of 0.01 resolution, since you may notice a slight upward swing in different measurements taken with a slightly increased line length, when normally the trend should be down because of increased line attenuation. This effect is damped out after several wavelengths, depending on the SWR at the load, the line Z_0, and the line attenuation. (Charts that show the cyclic nature of resistive-only reference impedance SWR meter values, even for lines with R_0 exactly matching the SWR meter base, are included in the Related Software package.)

[12] Eq 10 is a clever combination of equations 4 and 5. I first saw it in the user manual for the Autek RF-1. I am not sure who deserves credit for this useful insight.

[13] Grant Bingeman offers a very nice Windows Interface package for the CIA-HF. See his web site at **http://ww.qsl.net/km5kg/** for more information, including an on-line version of the user manual. AEA also offers PC software for the CIA-HF, see note 15.

[14] There is a web site at **http://www.tpub.com/neets/book21/88.htm** that describes several different kinds of bridges and impedance meters. Although general in nature it is very educational. This is one chapter in an online version of the US Navy's Electrical Engineering Training Series.

[15] See **http://www.mfjenterprises.com/**, **http://www.autekresearch.com/**, and **http://www.aea-wireless.com/**.

Developing Terrain Profile Data for *YT* using DEM Files

By Kevan Nason, NS4T
308 Beaverdam Creek Rd
Greenwood, SC 29646

NS4T describes a really fast way to obtain accurate terrain profile data for the *YT* Yagi Terrain Analysis Program.

Yagi Terrain Analysis (*YT*) by Dean Straw, N6BV, is a good tool to help determine how a proposed antenna system will work at your specific location.[1] It is used to evaluate the effect of uneven local terrain on the launch of HF signals from your location to other parts of the world. See **Fig 1** for a sample *YT* screen shot, showing the computed 21.3-MHz elevation pattern from my own QTH in South Caroline aimed towards Paris, in Europe. (Note that the statistical elevation-angle data also superimposed in Fig 1 is for Atlanta, GA, the location nearest my own QTH for which such data is available.) I have a small gully about 400 yards away in that direction. See **Fig 2** for a *YT* screen shot of my terrain profile at an azimuth of 49°. *YT* helps answer questions like:

- How does my terrain affect my signal strength in France?
- Would moving my antenna from 72 to 92 feet make much of a difference?

Several articles have been published by the ARRL and on the Web on how to use *YT*.[1,2,3] A major problem, however, is the difficulty obtaining accurate terrain elevation-profile data. The usual method requires a printed USGS topographical map and the painstaking use of a ruler and a large magnifying glass to measure distances from your tower base, noting the elevation at each point. In today's computer age there should be a quicker and more accurate way to obtain that data—There is, and it's free.

Getting Digital Topographic Data

In this article I give Web page addresses and describe links used to get data and programs. Be aware, however, that the Internet is a very dynamic place, so things change. You should still be able to find where the needed data and programs are, however, using a search engine, such as Google.

For example, a quick Web search for terrain data information took me to the "GIS Data Depot," run by The GeoCommunity and Digital Data Services. This site has topographical ("topo") maps for most of the United States. These maps are stored in a Digital Elevation Model (DEM) files. DEMs consist of a sampled array of elevations for a number of ground positions at regularly spaced intervals. In other words, the land around you has been mapped out in a grid and each grid point includes an elevation.

Here's the URL, valid at the time I am writing this article: **http://www.gisdatadepot.com/dem/demdownload.html**. Click your state on the map and then select your county. In my case, I clicked on South Carolina and then selected Greenwood County.

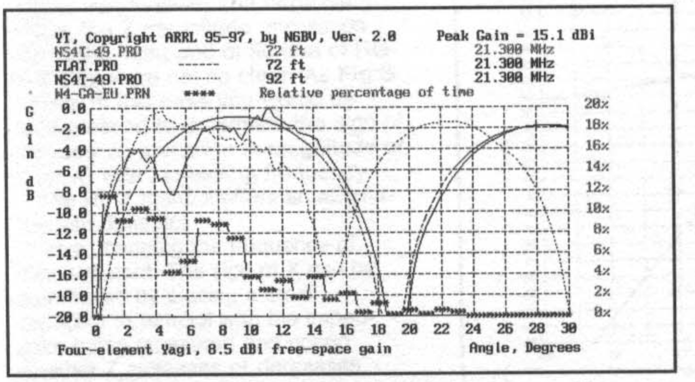

Fig 1—*YT* plot for NS4T's terrain towards Europe on 15 meters, for antenna heights of 72 and 92 feet, compared to a 72-foot antenna over flat ground. Overlaid on the same graph are elevation-angle statistics for the nearest location in the ARRL database (from Atlanta, GA) to Europe.

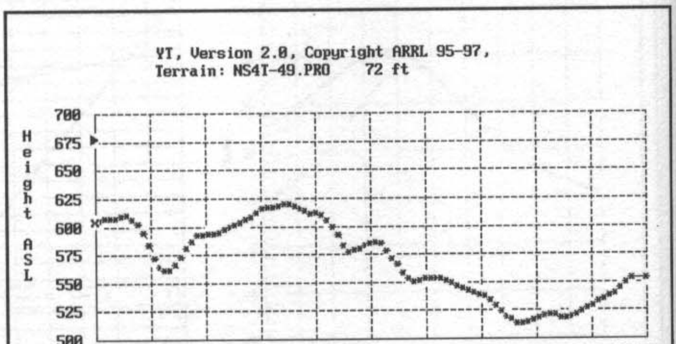

Fig 2—*YT* plot of the terrain from NS4T's tower towards Europe at a heading of 49°.

You will next be asked for what type of files you want to download. I use "Digital Elevation Models (DEM) - 24K," meaning that the scale factor is 1:24,000. They contain the 7.5-minute topographic data recommended by N6BV for the *YT* program.

You will see a description of various DEMs available for your area. You might need to download several files for your area, which are organized by state and then by county. In my case, I downloaded four that sounded right for Greenwood County, South Carolina: Bradley, SC; Greenwood, SC; Kirksey, SC and Ninety Six, SC. It turned out I live near the border of two maps (Bradley and Kirksey) and had to "merge" two of them to get a single file to cover all compass bearings for a distance of 10,000 feet from my QTH. I describe that operation later when discussing the specific mapping program I use.

An example of a DEM filename is 1633033.DEM.SDTS.TAR.GZ, for Bradley, SC, which I downloaded using the "Normal Downloads" (green arrow button). I save my DEM file to a dedicated subdirectory called "c:\MapData\DEM." I also chose to rename this file to be called "Bradley_SC.DEM.SDTS.TAR.GZ" rather than the number-only name. This way I could easily find the file I wanted later on.

I also downloaded the accompanying TXT file associated with each topographic DEM file, and I renamed it using the same "Bradley_SC" terminology. The text file is useful because it encapsulates all pertinent textual information about the topographic map itself. This is the electronic equivalent of all the printed labels appearing on the corresponding paper topographic map. One particular piece of information you may need to garner from the TXT file is the "datum" used in generating that map.

For example, the map for Bradley, SC, is an older one, since the source date is 1981. It uses the "North American 1927 CONUS" horizontal datum. ("CONUS" is short for "Continental US.") You'll find that there are hundreds of datums in use throughout the world, but that the topo maps for most of the continental USA use the North American 1927 datum. GPS receivers normally use the "WGS84 = World Geodetic System 1984" horizontal datum. The mapping program I'll describe in the rest of this article can automatically convert between various datums, but you may use a mapping program that doesn't have this capability.

The *MicroDEM* Computer Program

Now that you've got the raw DEM information, how do you make use of it? Your location probably is not exactly on top of a DEM file grid point. That means you are starting from a tower location that is not directly contained in the DEM file's binary data set, so you'd have to interpolate electronically. It is also unlikely that the azimuthal bearing you want to analyze will be in the same direction the grid lines are running. For example, the main portion of Europe from my QTH is at a bearing of 49°. You need a program which can use the DEM data to interpolate your tower's latitude/longitude and elevation, and that can then calculate what the terrain elevation profile looks like going from there in any desired compass direction. Luckily, such mapping programs that can read and use DEM data are also available free on the Internet.

MicroDEM v6, written by Professor Peter Guth of the Department of Oceanography, USNA, is my favorite program. Whatever terrain information you need, this program can probably help you generate it. It has many uses besides developing a *YT* terrain profile. UHF and SHF operators may want to know the coverage range from a location at the top of a mountain. Use the Overlay tab, followed by "Viewshed" option to see what locations are visible.

You can overlay a local map to see cities and roads if you want, using Census Bureau "Tiger" data. I'll give an example later how to use this fantastic facility.

How high do you need to put your 2-meter antenna to reach that repeater 50 miles away? Enter the antenna heights and use the "Line of Sight" calculator. *MicroDEM* also has radio line-of-sight capability, with information about Fresnel zones and earth-curvature settings. This is invoked by clicking on the "LOS" (line of sight) button and double clicking on starting and ending points on the map. Right click for specific radio line-of-sight options.

Looking for a suitable campsite for your Field Day or Islands On The Air (IOTA) portable expeditions? Use *MicroDEM* to identify potential areas that have sloping terrain toward your geographic areas of interest before you jump in the car or boat.

If you are setting up an emergency station for help during a flood, *MicroDEM* can calculate flood basins to show you what place will still be dry if the river rises another eight feet. It gives sunrise/sunset, moonrise/moonset, and magnetic declination for anywhere in the world. Use the "Distance between two points" option to find the straight-line distance between two stations. *MicroDEM* will also merge up to four DEM files to give you a seamless map, should you find your QTH is near the border of a particular DEM file. And to top it all off, *MicroDEM* is available free.

At nearly 30 MB, however, *MicroDEM* is a big program to download. It currently requires either Windows 95/98/ME/NT/XP or Windows 2000 operating systems. The US Naval Academy downloading site can be found at this URL: **http://www.nadn.navy.mil/Users/oceano/pguth/website/microdem.htm**. The program is under constant development and the latest beta version can be found here.

The Army's Terrain Visualization Center web page at **http://www.wood.army.mil/TVC/** has a link to earlier (presumably more stable) versions of the *MicroDEM* download and explanation pages. Installation is handled automatically when you run the downloaded executable file. Setup will also create a folder called C:\MapData\DEM. *MicroDEM* can read the compressed DEM files you download to this location.

Where Exactly Is My Tower?

You've got the DEM data for your locale. You've got *MicroDEM* and now the next thing you'll need is your exact tower location. Some Internet sites use your Zip Code to compute your approximate latitude and longitude, but these are not accurate enough. For example, data from one popular Web site was off by 10 miles for my location. You need the actual degrees, minutes and seconds for your tower location or proposed tower location.

I recommend that you buy or borrow a handheld GPS receiver. I've seen them available in sporting goods stores for less than $100. Place the GPS at the base of your tower (or where you might be interested in installing a tower) and let the latitude/longitude reading settle down for a few minutes. Alternatively, you can check maps on **http://www.topozone.com/** and use these to find your location. You'll need to select either decimal degrees or DMS at the bottom of the screen. You can then read coordinates directly under your mouse cursor.

Generating a Terrain Profile Using *MicroDEM*

Setting the Options

Now we'll generate the terrain profile. Start *MicroDEM*. If this is the first time you've used the program, let's set some options. Click on the "Options" menu listing.

- Select the **Units** tab (you may have to use the arrows at the top to see all the possibilities for options).
    - Select the **Lat/Long** button in the textbox labeled **Locations**.
    - You might wish to set the elevation readout to **Feet** and the speed readout to **miles per hour**, if you wish.
    - In addition, depending on how your GPS shows the latitude/longitude, you may want to specify in the **Lat/Long** textbox the exact way you wish to specify latitude and longitude. For

example, let's say that your GPS shows your position at 42° 4' 30" N latitude and 82° 7' 35.1" W longitude. This is the so-called "degrees/minutes/seconds" method of showing latitude or longitude. You would select the "Decimal seconds" option. However, if your GPS showed the same position as 42.07500° N and 82.12641° W, this is expressed in "Decimal degrees." Some GPS receivers show position as "Decimal minutes"—such as, 42° 4.5' N and 82° 7.585' W.

- Click on the **Coordinates** tab.
  - In the **Verify** box, click on the option **Keyboard entry**.
  - In the **Show roam on all maps** box click on the **Reasonable** option. Do this also for the **Verify Graphical Selections** box. The values for latitude/longitude determined by the mouse will now bring up a verification box in which you can type the exact coordinates.
- Now, click on the **Views** option tab and then uncheck the box labeled **Missing values set to sea level.**
- Click on the **Maps** option tab.
  - Click on the **Grid** button and make your choice of **UTM** or **Lat/Long** for **Grid** and for **Label Grid**. Make sure that the **Primary Datum** is set to "WORLD GEODETIC SYSTEM, 1984." Optionally, you can select the **Secondary datum** to be "NORTH AMERICAN 1927, CONUS" is this is the datum for the topographic map you use for your area. You can check the checkbox **Secondary grid** to overlay both datums on your maps, so you can see the differences due to the two different datums. The primary datum latitude/longitude markers will be in black and the secondary markers will be in red.

  Close the Options dialog.

Merging Topographic Maps

I mentioned earlier that I needed to "merge" two DEM maps, because my tower is located near the junction of two topographic maps. In *MicroDEM*, close all open DEMs and click on the **File** top menu selection and then click on **Data Manipulation**, followed by **Merge** and then **DEMs**. You will be presented with a list of the DEMs located in your default maps subdirectory. Select the first DEM, followed by the second one. In my case, I merged Bradley, SC, with Kirksey, SC. Then click **Cancel** to end the merging operation, and save the resulting merged file, using an appropriate filename, such as "Merged Bradley Kirksey.DEM." Follow the prompt by clicking on **OK** to close the merge operation.

Bring on the Tiger!

This next step is not totally necessary, but I think it significantly adds to the process if you can visualize how your terrain relates to the roads and streets near your location. This is where the US Census Bureau "Tiger" data I mentioned previously comes into play. Go to the following URL: **http://www.census.gov/geo/tiger99/tl_1999.html**. Download first the file "States_Counties Index.PDF" from Appendix A, and then open it up using *Adobe Reader*.

This file gives a list of the so-called "FIPS" numbers. These identify a Tiger file for a particular county in a particular state. (By the way, the term "Tiger" stands for "Topologically Integrated Geographic Encoding and Referencing," just in case you were wondering.) In my case, I wanted to download Tiger information for Greenwood County, South Carolina, where the FIPS number is 45 047.

From the URL above, I selected "South Carolina" and was taken to the US Census FTP site for South Carolina, where I chose to download "tgr45047.zip" to the c:\mapdata\Tiger\SC subdirectory. (Note that I used the "Create New Folder" to create the "SC" subdirectory from the basic tree structure *MicroDEM* created when it was installed.) *Do not* try to change the name assigned to this zipped file or *MicroDEM* will not be able to find and associate it with DEMs you display.

Now, I could bring in the merged map and add Tiger data to it. I bring up *MicroDEM* and click on the **File, Open DEM** selections from the top menu. I click on my merged file "Merged Bradley Kirksey.DEM." Then I click on the map icon on the top of the merged map's window—the one that looks like a miniature map of the southeastern USA. I select the file "tgr45047.zip" in the c:\mapdata\Tiger\SC subdirectory and watch what happens. Pretty neat, isn't it?!

Setting the Reflectance Parameters

MicroDEM defaults to a gray "reflectance" display for elevation. I like to tweak the settings for this, by clicking **Modify, Display Parameters, Reflectance**. I prefer a color display of elevations, so I select **IHS elev**, with a **Vert Exag** of 8. **Fig 3** shows the resulting display for my merged map with Tiger overlay of roads in red and streams in blue.

A Larger View

Next, let's make the map area shown on the screen as large as possible for a 3000-meter (3-km) circle inscribed around your own tower's location. 3000 meters represents enough distance around your tower for *YT* to create accurate reflection/diffraction ray-tracings to compute the far-field elevation response. (Note that *MicroDEM* asks you to specify the range circles in meters, even if you've set the Options to show distances in feet.)

- Click on **Calculate** from the top menu and select **Where is? (keyboard)**. Type in the GPS latitude/longitude coordinates for your tower and click **OK** to place a small "+" on the map, representing your tower's position. You can change the symbol, plus the color and size of the symbol, if you like. You can also type in a name for your location. I use "NS4T," of course.
- Now click on **Overlay** from the top menu and select **Range circles.** (You can also click on the range circles icon at the top of the map window.) Type in "3000" for 3000 meters and click **OK**.
- Place the mouse cursor over the "+" marking your tower and double left-click the mouse. A 3000-meter red range circle will be drawn around your tower.
- Now, click on the dotted-line rec-

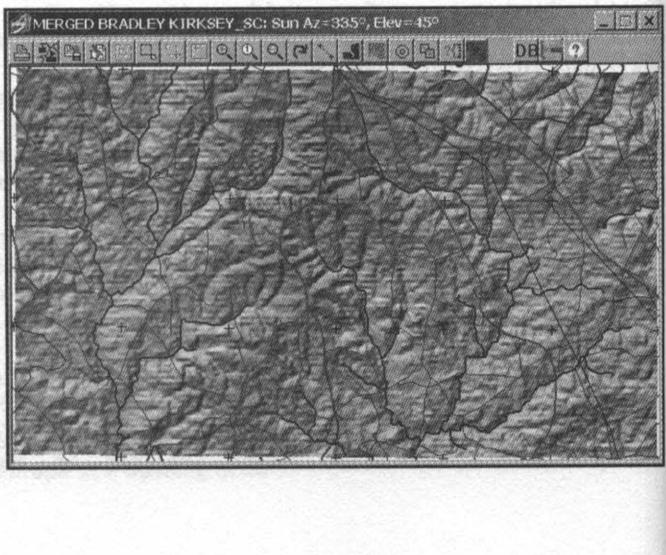

Fig 3—Screen shot from *MicroDEM*, showing merged topographic maps, together with US Census Tiger data for roads and streams.

tangular box icon (fourth from the left) on the DEM map window. This icon has a small arrow at the lower right corner. While holding down the left button on your mouse, start at the upper-left hand corner and move the cursor to the lower right, bracketing the range circle with a box. Release the left button and MicroDEM will take the area you've selected and "blow it up" full-size. This gives you maximum resolution for the following steps. Now, you're finally (!) ready to make a terrain profile.

Making a Terrain Profile

- Click on **Calculate** and then **Offset**.
- Type in an offset of 3 km, click on **OK** and then type in your bearing of interest, say 49°. Click on **OK**. [While you could specify longer-distance offsets, *YT* has a limit on the number of data points it will accept in its internal matrices. Stick with an offset of 3 km.—*N6BV, Ed.*]
- Move the mouse cursor to the "+" indicating your tower's Lat/Long coordinates and double click the mouse. A dialog box will appear in which you can type the exact coordinates. You'll find that it is almost impossible to get the mouse cursor at the exact position without the ability to type in the correct numbers.
- When you complete this, a guide line will be drawn on the map. Say **No** to the pop-up box asking if you want to draw another. The idea is to use this new line as a reference guide line to create the final terrain profile.
- Click on the menu choice **Calculate** and then **Stream Profile**. (Yes, that is a rather obscure name for this particular function, but it works!)
- Move your cursor to your tower location ("+") on the map and double click. Type in the exact position of your tower in the pop-up dialog box.
- Now move the mouse cursor to the outer end of the guide line drawn on your map and double click again. When you've properly overlaid the guide line, the line will turn completely white.
- Right click with your mouse and then left click on the words **End selection** to end this process.
- A profile map of your terrain in that direction will be displayed. Note that the elevations on this profile will be displayed in meters.
- Next, click on the **Analyze Graph** choice that now appears on the top menu, and then **View data**. This is a tabular listing of the terrain profile data that *YT* will eventually use (once they are converted from kilometers and meters to feet). The first column is the distance from your tower base, in kilometers. The second is the elevation in meters. **Fig 4** shows a *MicroDEM* screen with a 3000-meter range circle and a guide line from my tower towards Europe, at a heading of 49°, together with the resulting terrain profile and the tabular profile list.
- Click on the third icon from the left (the one that looks like lines from a piece of paper being saved to a floppy disk), which allows you to **Save file**. Name and save your data, which will automatically have a filename extension of *.TXT. It is most convenient to place the saved file in the subdirectory where *YT* is located (generally, c:\Antbk19\Terrain).

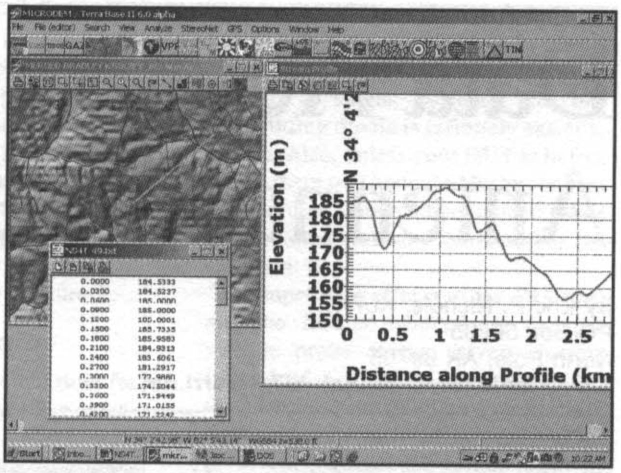

```
0.0000   184.5333
0.0300   184.5237
0.0600   185.0000
0.0900   185.0000
0.1200   185.0001
0.1500   185.7335
0.1800   185.9583
0.2100   184.9313
0.2400   183.6061
0.2700   181.2917
0.3000   177.9880
0.3300   174.8044
0.3600   171.9449
0.3900   171.0155
0.4200   171.2242
```

Fig 4—Screen shot from *MicroDEM*, showing a detailed blow-up of the NS4T terrain map, with a 3000-meter range circle and a guide line at 49° heading, plus the terrain profile along that line and the data file corresponding to that terrain profile. This data file will be saved and converted from meters to feet for use with *YT*.

Make sure you keep the length of the *.TXT filename you choose less than or equal to eight characters long (a DOS limitation). In the example I've been outlining here, an appropriate filename might be "NS4T-49.TXT" indicating that it represents a 49° azimuth from the NS4T tower. "NS4T-EU.TXT" would work also, as would "NS4T330.TXT" for an azimuthal heading of 330° towards the Far East.

At this point you might want to run *MicroDEM* for some other headings—perhaps for South America, Japan, Australia, south Africa, south Asia, etc. Now you can quit *MicroDEM*.

Converting the Terrain Profile for YT

Now, go to the ARRLWeb download site for *The ARRL Antenna Compendium, Vol 7* at **http://www.arrl.org/notes/8608**. Download the program *YTM2FT.EXE* into your *YT* subdirectory (normally c:\antbk19\terrain). *YTM2FT* is a DOS program written by N6BV for this article that converts the text file in meters created by *MicroDEM* into a terrain profile in feet that *YT* can use.

From a DOS window, bring up *YTM2FT*. It will ask you to press the "Enter" key and will then show a list of *.TXT files in the subdirectory. Choose the one you want to convert, say, "NS4T-49.TXT" by moving the arrow cursor keys and then press "Enter." You will now have a new file called "NS4T-49.PRO" for *YT*. [Note that if you copy or rename this file as "NS4T-49.TER" it will work with K6STI's *TA* (Terrain Analysis) program.—*Ed.*]

Conclusion

Using this method and *YTM2FT* to convert the data, I have generated many terrain profiles for my QTH. *MicroDEM*'s code is well written and runs quickly, even on a Pentium 200 MHz computer. Once it and the DEM files are installed it takes me less than ten minutes from start to finish to save a completed terrain profile map for any bearing. Hopefully, this will make terrain analysis easier for you too.

Those wishing to explore its other *MicroDEM* features might find help in its 183 page user manual or at **http://forums.delphiforums.com/microdem/start**.

NOTES AND REFERENCES

[1] Chap 3, *The ARRL Antenna Book*, 19th Ed. (Newington: ARRL, 2000), pp 3-14 to 3-22. The *YT* program is bundled with the 18th and 19th Editions of *The ARRL Antenna Book*.

[2] Peter Smith, N4ZR, "Scoring Your Antenna System—A Quantitative Evaluation of Changes in Antenna Height and Other Characteristics," *NCJ*, Jan/Feb 2001.

[3] Dan Levin, K6IF, "K6IF's Quest—The 2000 ARRL 10 Meter Contest," **http://www.k6if.com/arrl10_2.html**.

Data Acquisition for the Antenna Experimenter

By Eric P. Nichols, KL7AJ
PO Box 56235
North Pole, AK 99705
e-mail: **enichols@gci.net; kl7aj@arrl.net**

KL7AJ discusses practical techniques for making your own antenna pattern measurements.

Like most readers of the venerable *Antenna Compendium* series, I am passionate, almost obsessive, about antennas. There is something elegantly primordial about these mere pieces of wire and sheet metal being able to launch radio waves across vast reaches of space!

When you think of the gazillions of transistors jammed into the average microprocessor, it gives you a special appreciation for the simplicity and effectiveness of an antenna. There is a certain comfort in knowing that despite the staggering advances in semiconductor technology and software, an antenna works exactly the same way it did in the days of Marconi.

Because of the low parts count for even the most elaborate antenna, when compared with the average computer (or bicycle, for that matter), you might be tempted to assume that everything that can be said on the matter has already been said. After all, how many ways can one bend a piece of wire?

When pressed, even the grizzled sages in our ranks will admit that there comes a time when all the antenna tweaking in the world will only achieve diminishing returns. Not many hams talk about major breakthroughs in antenna design these days, but they describe incremental improvements in performance—or perhaps in stealthiness.

Perhaps if there is a place for a major breakthrough in the antenna arena, it is with regard to *truth in advertising*. I refer not to deceptive specsmanship, something which ARRL has addressed in a very responsible fashion, but something much more basic. Very few present-day hams have a clue about how to actually *measure* the performance of an antenna.

Let me wax Biblical for a moment by quoting Proverbs 11:1—"A false balance is an abomination to the Lord, but a just weight is His delight." What I would like to address in this article is a systematic approach to antenna measurement and evaluation, using some of the more modern and even fun tools now available to the twenty-first century ham. I would like you to "justly weigh" what is reasonable (and what is not) when it comes to an antenna's performance.

How We Used To Do It

This is not a "when I was your age" lecture. Nobody appreciates computer modeling more than a geezer like me, who has spent years with the "cut-and-try" method. However, there is a limit to the understanding of the physics involved if all you've done is computer modeling of antennas. (My heart goes out to any ham who hasn't the room to actually *build* an antenna. Fortunately for this particular KL7, vast tracts of empty wasteland are the one thing that seems to be in abundance up here). The best way to actually learn about antennas is with solid mathematical theory and modeling, plus some good old-fashioned, hands-on experience. *The ARRL Antenna Book*'s emphasis on safety notwithstanding, you just haven't lived until you've gotten a really rip-snorting RF burn on a sensitive extremity!

With that bit of nostalgia out of the way, let us examine a traditional method for generating a radiation pattern from a sample antenna. I remember the first time I went through this exercise, long before I had an Amateur Radio license. I was in a high school electronics class when I was first introduced to the concept of the Yagi antenna. Mr. Scott, our instructor, had assigned a small group of us students the task of plotting the radiation pattern of a 430-MHz 3-element Yagi antenna.

The field-strength meter we used was some sort of military-surplus affair that, if memory serves, occupied the lion's share of a six-foot equipment rack. A wooden yardstick with a welding-rod dipole at one end was connected to the field-strength meter with a long run of small diameter coaxial cable, something like RG-174. We had pushed all the desks to the sides of the classroom to make room for an indoor test range, with the Yagi mounted on a wooden stool in the middle of the clearing. On the floor, circling the stool, we had put down patches of masking tape in 15° increments.

It wasn't exactly an anechoic chamber, but that fact in itself was rather instructive and interesting. One of our group was instructed to read the field-strength meter and make marks on a sheet of polar plot paper, while another one of our group waltzed around the antenna in question, yardstick/dipole in hand, calling out degrees of the compass, being sure to keep the dipole precisely one yard from the Yagi, and always oriented for maximum field strength at each location.

Despite the rather chaotic appearance of the operation, we did manage to generate a set of plots that looked moderately like the textbook Yagi's radiation pattern. We eventually experimented with different element spacings, element tunings and configurations, and learned quite a bit about Yagis in general. It was tedious and not very scientific, but it worked... sort of.

Despite the marvelous revelations we gleaned from the procedure, it should be obvious that we did a lot of things wrong. A classroom full of metal desks is not the ideal environment for measuring antenna patterns, even way up at 430 MHz. Neither is a human body in the immediate field of the antenna conducive to accurate measurement. The polarization and perpendicularity of the reference dipole was always in question. A balun-less dipole with a randomly dangling lead-in cable probably didn't help either. And probably worst of all, the measurements were made *far* too closely to the DUT (Device Under Test).

It is considered good practice to make measurements at least 10 wavelengths from the DUT, not only to eliminate near-field errors, but so that the antenna is essentially a point source. An antenna almost a yard long definitely does *not* look like a point source to a complementary antenna one yard away!

Two of the main tenets of Good Scientific Procedure (GSP) are objectivity and reproducibility. A good test will give the same results regardless of where the test is performed. Objectivity requires that all unknown variables be eliminated, including personal prejudice. The unknown variables in my high-school test, such as the presence of metal chairs and teenage bodies, are easily eliminated from the equation.

The elimination of preconceived notions of how some experiment *should* turn out is much more difficult to achieve. In fact, the very choice of tests that any DUT might be subjected to may very well be influenced by personal prejudice. There is an anecdote from the Olympics during the Cold War years that illustrates this point. A Russian commentator proudly announced in one particular race that the Russian competitor was third from the lead, while the American competitor was third from the last. What he failed to mention was that there were only three runners.

We must be careful when making any kind of supposedly objective measurements that we have an objective means of determining our objectivity. This is not an easy task. (An Englishman states that all Englishmen are liars. Do you believe him?) Now, assuming that we really do want to know the truth, the whole truth and nothing but the truth about our antenna, how do we go about doing this?

First, we need to realize that when comparing antennas—Yagis, for example—it's important that we aren't comparing the proverbial apples and oranges. An antenna with high front-to-back ratio might be far more important in a congested location than one designed for maximum forward gain. Much of the time, in KL7 land, you're lucky to find any signals at all. A little QRM might actually be welcome, if for no other reason than to know that there really is an ionosphere up there.

So we must set out at the very beginning to determine exactly what it is we want to measure. And we need to determine exactly what we're going to measure it against. Are we going to use gain over isotropic (dBi), gain over a dipole (dBd), or some perhaps specialized unit of measurement? All such units are fair as long as we establish ahead of time which units we plan to use. Specifications must always be used to convey information, never to obscure it.

From Philosophy to Practice

Now that we've set some ground rules for antenna measurement (or any other scientific measurement, for that matter), let's describe some practical methods for achieving that end. It's always better to measure an antenna in free space, not that you're actually going to use it under such conditions, but you need to start somewhere.

Now, unless you live on the International Space Station, it's usually impossible to achieve true free-space conditions. The closest thing to such conditions on Earth is the *anechoic chamber*, a special chamber with scary-looking pyramids of highly absorptive material, designed to simulate the ideal black body in our physics books. Most hams have access to neither a space station nor an anechoic chamber, so we have to approach those conditions as nearly as possible, always knowing that there will be some error. We can't totally eliminate unknown variables, but we can drastically reduce them.

A few rules of thumb are in order. These are, of course, not hard and fast, but they will assure reasonably accurate results.

- **Rule 1**: Your antenna should be at least one wavelength away from any reflective object. This is not hard to do at VHF, but is nearly impossible at low-band HF. For this reason, it is often much easier to design an HF antenna at VHF and then scale it down after all the tweaking is done.
- **Rule 2**: Your reference antenna should be at least 10 times the distance from the DUT (antenna under test) as the DUT's largest dimension. This will assure that the antenna appears essentially as a point source of radiation. This eliminates parallax error and makes the center of the DUT easier to define.
- **Rule 3**: Your reference dipole should remain fixed, while your DUT is rotated. (This was not what we did in Mr. Scott's high school electronics class, as you will recall.)
- **Rule 4**: Your DUT should be the receive antenna, while your distant reference antenna should be the transmit antenna. Although the theorem of reciprocity tells us that this shouldn't make a bit of difference, there are reasons for doing so. As an antenna becomes more complex, it becomes increasingly difficult to isolate impedance effects from directivity/gain effects. A single, perfectly matched transmitting dipole is infinitely easier to design. Also, unless your DUT is in free space, there will undoubtedly be changes in coupling to surrounding objects while it is rotated, further complicating the situation.

  The impedance effects of the DUT can also be further reduced by using a voltage probe at the driven element instead of a matched impedance, but there are some practical complications in doing this. Because of the difficulties involved, most antenna designers opt for a matched receiving load (which yields a true power measurement) and put up with a slight mismatch across the frequency band of interest.
- **Rule 5**: Be sure your reference dipole is in the same plane as that in which your DUT rotates. This may seem obvious, but if this rule is not followed, you can really get some weird results.
- **Rule 6**: Know your coordinate system. Different modeling programs use different systems, much to the chagrin of many antenna modelers (myself included). Some use the Zenith angle, which is degrees down from straight up. Some use elevation, which is degrees up from horizontal. Some use spherical coordinates, while most (*NEC*, *MININEC*, *NEC4WINDOWS*, etc) use a cylindrical coordinate system.

  Even if you aren't using any computer modeling, you need to know how the coordinates work in order to properly describe your antenna's radiation pattern. For example, a change in *elevation* at 0° azimuth, translates to a change in polarization at 90° azimuth for an antenna like a dipole. (This is true also at 270° azimuth.)

A little "thought experimentation" with a pair of pencils or chopsticks will show how this works. In a similar vein, if you were to place your reference dipole directly overhead (simulating a vertically incident skywave signal), what happens as you rotate your Yagi? All you've done is change your relative polarization. Your radiation pattern is rendered meaningless.

Now that I've made these points, I'd like to talk about some really neat tools that will make this a one-person job. Let's dispense with the polar graph paper, the pencils, the analog field-strength meter and the error-prone human graph maker. Enter *Data ACQuisition* (DAQ). In its modern incarnation, DAQ refers to the digitizing and recording of analog data. This produces digital data that can be processed in a lossless manner. By "loss," I refer not to a loss of amplitude or gain, but to a loss of accuracy.

In a properly designed DAQ system, the only inaccuracies will be in the actual analog circuit, due to either noise or inaccurate voltage scaling. Once the data is digitized, there should be no change in accuracy due to subsequent processing. Almost without exception, the analog data we are interested in digitizing is a dc voltage. There may be a multitude of processes preceding the dc voltage, as any number of physical quantities (time, temperature, current, velocity, etc.) are sampled. These analog processes are all known as *signal conditioning*. But the end result is always to produce a dc voltage, which is then digitized.

The hardware you will use can run the gamut in cost and elegance. National Instruments *Labview*-based DAQ cards can run into the multi-kilobuck range, while B&B Electronics produces a nifty little serial-port module that samples eleven channels of data in 12-bit chunks for a mere $40. But, you probably already have an excellent DAQ device, perhaps without even knowing it. It's called a computer sound card! The most mediocre garden-variety sound card is capable of digitizing analog voltages to an accuracy far beyond anything the average ham needs for antenna measurement. They also make nice analog servo drivers. (I have quite a collection of non-audio amateur and commercial/scientific applications for sound cards, which I will make available to anyone interested. E-mail me.)

My System

How do we put this together? Allow me to describe my simple but effective, almost-automated antenna-measuring system for 20 meters that can be easily tailored to available equipment. First of all, it's helpful to have an antenna rotator with a well-known turning rate. However, lacking this, it's even better to have one with an accurate readout. It's not necessary to have a digital readout, since we'll be needing to do some A-D conversion anyway. I have an ancient Ham-M rotator console with an analog meter for a position indicator, which works just fine.

I have a 20-meter inverted-V dipole, with a current-mode balun atop a 30-foot mast, about 150 feet from my house. (It's not quite distant enough to obey the 10 times rule on 20 meters, but it's adequate.) I drive this with a battery operated, voltage-regulated 14.290-MHz crystal oscillator mounted at the base of the mast. I could also drive my inverted-V dipole with my semi-ancient HP function generator in my shack, but in order to reduce stray pickup I just put the whole shebang out in the woods, so I don't have to guess.

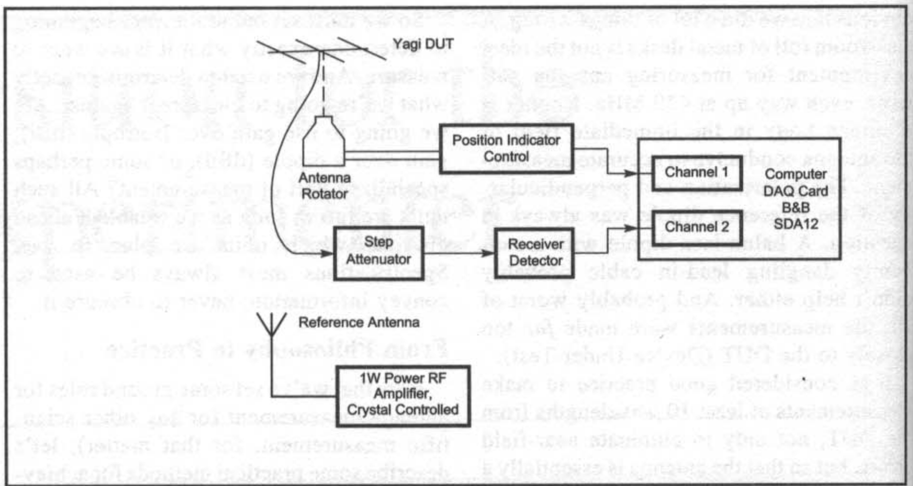

Fig 1–Block diagram of KL7AJ's test setup.

I don't worry about absolute field strength for pattern measurements, but this is certainly feasible with a little modification. My trusty Ham-M rotator is on my 30-foot crank-up tower against the back of my house, with a quick-release mounting plate for moderately easy mounting of DUTs. My receiver is a homebrew direct conversion receiver with no AGC. (I have a lot to say about S meters, dynamic range and AGC, but I'll refrain from unloading my spleen in this article.)

The output from the balanced modulator of my homebrew receiver is extremely linear and proportional to the received voltage at the antenna terminals. The dc output from the balanced modulator is fed to one channel of a B&B model SDA12 serial-port AD converter.

The dc voltage from my Ham-M rotator indicator is likewise fed into another channel of the B&B module. See **Fig 1**. The B&B module records data directly into an *Excel* spreadsheet file, at up to 10 records per second. Now, to make a complete plot all I do is start data acquisition and hit the rotator. In one minute, I have more data than I could collect in a whole week of waltzing around in Mr. Scott's class. I then use *Chart Wizard* to plot a "radar chart" of amplitude versus rotation. Voila, I have a polar antenna plot!

Now there are more elegant ways of displaying polar data than with the *Excel* Chart Wizard, using such pricey programs as *Origin* or *Matlab*, and I've used them many of them. However, the majority of hams probably already have *Excel*, and it does work nicely for generating a quick-and-dirty radiation pattern.

A Few Words About Sound Cards

If you do want to use a sound card as a DAQ device, there are a few things to know that might save you some grief. First, the input path of most cards (all Soundblasters, at least) is capacitively coupled. They generally are incapable of passing frequencies lower than about 20 Hz. I have modified a couple of cards in the past by locating (a nearly impossible task, lacking schematic diagrams) and bypassing the interstage coupling capacitors. I don't recommend this except for the most dire circumstances. The better solution is to use a modulated RF carrier (400-Hz modulation works fine) and recording the tone amplitude instead of a dc voltage. I use *Goldwave*, an awesome shareware digital audio suite for this purpose (downloadable from **http://www.goldwave.com/**).

I record the detected audio output from my receiver on the left channel and one-second time ticks on the right channel. (This is where you need a well-known rotator speed, or alternatively, you could build a tone-chopper, or voltage-to-audio-frequency converter for your position indicator). Now, these PCM data files are huge, and would be unwieldy for more than a minute or so.

I've thrown together a *Labview* virtual instrument that filters and rectifies Wave and PCM files, thereby yielding dc voltages again. It's a convoluted way of achieving what I could do with my $40 B&B module, but it's a viable alternative solution.

Hopefully, I've presented some thought-provoking material on the measurement and evaluation of antennas, as well as some practical tools to help achieve that end. For me, these endeavors are the most fulfilling part of Amateur Radio and the primary reason I've been with the hobby for most of my life.

A Method For Determining Electric Field Strength

By Ted Tahmisian, W9WT, PE
1166 E Wildwood Dr
Columbia City, IN 46725

W9WT presents a thorough tutorial on measuring electric field strength.

When conducting antenna experiments, it almost becomes a necessity to have a means for measuring electric field strength, enabling you to assess antenna performance and radiation patterns. In addition, compliance with electromagnetic radiation regulations can be verified.

This article describes a method for determining electric field strength by measuring received signal power. A sensitive power meter capable of measuring signal levels from a receive antenna with known performance forms the basis of this measurement technique.

Most calibrated field strength meters measure the voltage produced by a short, high-impedance antenna. Such meters are calibrated using an electromagnetic field of known intensity. The method presented here does not require such elaborate electromagnetic field-calibration techniques.

With knowledge of basic antenna properties, you can determine electric field strengths by taking measurements of the power captured by a dipole antenna of known performance and behavior. I will discuss a sensitive power meter you can build, along with the means to calibrate it.

The field strength measurement method described here works very effectively for frequencies above 30 MHz and the principles can be employed at HF as well. I've verified this technique with experiments using both vertical and horizontal polarizations. I'll also touch on a means of applying a scaled approach at lower frequencies.

Developing the Relationship between Received Power and Field Strength

Before getting into the measurement details, a review of some basic field theory is appropriate. I shall keep it to the point and use only the concepts required for our purposes. To start off, I need to define some terms.

P_t = Radiated power from an isotropic source, expressed in watts. (For our purposes, the term *isotropic* is used to mean equal radiation in all directions. Other isotropic properties will be introduced as needed.)
R = The distance between the source and receiving antennas, in meters.
P_r = Received power, in watts.
A_r = Effective receiver antenna-capture area or antenna aperture, in square meters (m^2).
A_t = Effective transmitter-antenna aperture, in square meters (m^2).
P_d = Power density, in watts per square meter (W/m^2).
λ = Wavelength, in meters = 300/f MHz.
E = Electric Field Intensity, in volts/meter (V/m).
G = Antenna Gain (G_r and G_t to denote receive and transmit antenna gains).
P_{refl} = Reflected power, in watts.
P_{fwd} = Forward power, in watts.
SWR = Standing Wave Ratio (numeric representation).
ρ = Reflection Coefficient (numeric representation).

Other useful terms that are discussed in this article:

V_r = Received voltage, volts
K = Antenna factor.

Since we want to determine electric field strength by measuring received power, we need to formulate a relationship between the electric field and the power received from an antenna placed in that field. In examining field strength, we will need to apply principles of transmission loss, antenna-capture area (or aperture) and antenna gain. All of these are interrelated, both physically and mathematically. We will employ all these concepts to attain the relationship between received power and field strength.

Electric Field Principles

Field strength is measured and expressed in Volts per meter (V/m) and is a measure of the *electric field* created by an electromagnetic radiating source. The terms field intensity, field strength and electric field are used synonymously in practically all texts dealing with the subject. I'll try to stick with the term *field strength*.

Electromagnetic radiation from a point source propagates radially and equally in all directions. A sphere of radius R meters, with the radiating source at its center, represents all points of equal radiated power density. Power density can be mathematically expressed as the total radiated power from a central point source divided by the area of the spherical surface. The power density, at any position on a spherical surface of radius R is therefore:

$$P_d = \frac{P_t}{4\pi R^2} \qquad \text{(Eq 1)}$$

Power is expressed in watts and distance is expressed in meters. The power received over a portion of the spherical surface is therefore equal to power density at distance R multiplied by the area of that portion, or:

$$P_r = P_d A_r, \text{ or } P_d = \frac{P_r}{A_r} \qquad \text{(Eq 2)}$$

See **Fig 1**. We can associate the area (A_r) with the capture area of a receive antenna. The power received by this antenna is similarly the power density in watts per square meter multiplied by its capture area. We will examine properties of capture area shortly. While Eq 2 expresses power density geometrically, we also need to express power density electrically.

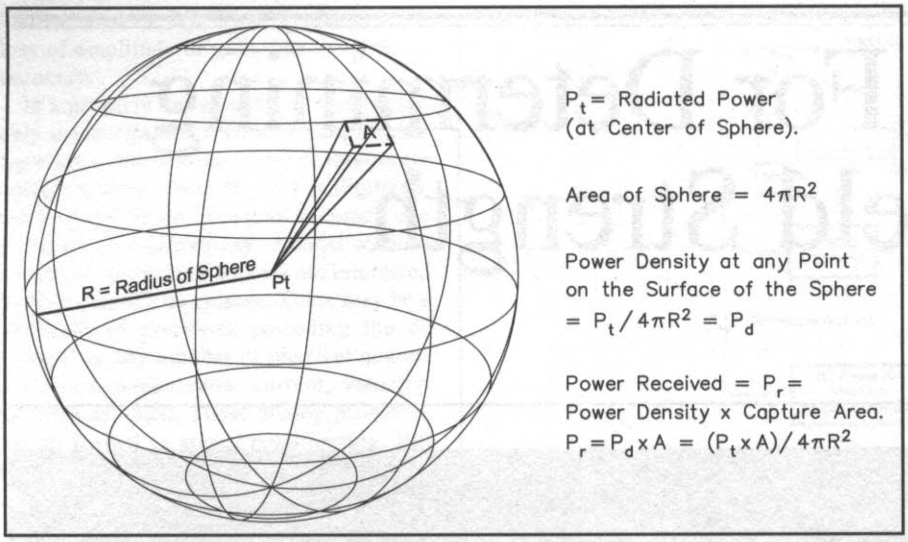

Fig 1—Power density and received power.

The intrinsic impedance of free space is $120\,\pi$ or $377\ \Omega$ and can be taken to be resistive, given the loss characteristics of free space. We shall let E represent field intensity expressed in volts per meter. By squaring it, E^2 will be expressed in V^2 per meter^2. Dividing E^2 by the intrinsic impedance of free space, the result is expressed in watts per meter,[2] which is also the power density.

$$P_d = \frac{E^2}{120\,\pi} \qquad \text{(Eq 3)}$$

Since E is expressed in V/m, and $120\,\pi$ is the free space intrinsic impedance, P_d is also expressed in W/m^2. Solving for E^2 in Eq 3 above, we have:

$$E^2 = 120\,\pi\,P_d \qquad \text{(Eq 4)}$$

Substituting Eq 1 for P_d in Eq 4 we get,

$$E^2 = \frac{120\,\pi\,P_t}{4\,\pi\,R^2} = \frac{30\,P_t}{R^2} \qquad \text{(Eq 5)}$$

Eq 5 gives us a relationship that can be used to equate field strength at the receive location to the power (P_t) that is radiated. Taking the square root of Eq 5, we have the field strength in terms of the radiated power and the distance from that radiating source to the receiving or intercepting antenna.

$$E = \sqrt{\frac{30\,P_t}{R^2}} \qquad \text{(Eq 6)}$$

where E is expressed in V/m. While this is useful, recall that we need to find an expression for E expressed in terms of received power (P_r). To achieve this, we need to examine the following.

The Concepts of Antenna Area, Gain and Transmission Loss

We need to examine the concept of *antenna area*, which is the term A_r in Eq 2. We shall see how antenna area (also known as *capture area*) is related to antenna gain. We must examine the notion of *transmission loss* also.

As mentioned previously, all of these parameters are interrelated. In Eq 1, the term P_t represents the power radiated from a point source. This point source is called an *isotropic radiator*. Besides radiating equally in all directions, isotropic radiators by definition have a gain of unity. Isotropic radiators are, of course, fictional. The concept is useful for communications systems analysis.

We can make the radiating source more realistic, simply by associating some directivity with it. Practical antennas typically radiate greater energy in a specific direction when compared to truly omnidirectional isotropic radiation. Assuming that both the isotropic radiator and our practical antennas are radiating the same total power, the ratio of directed radiated energy to isotropic energy is called antenna gain over isotropic. (A word of caution: Do not confuse antenna gain over isotropic with antenna gain that is referenced to a dipole. The latter typically is what antenna manufacturers use to describe gain performance of their products). To take into account the gain of a practical antenna, Eq 1 is modified by simply multiplying it by the gain term (G_t) representing the gain of the transmitting antenna.

$$P_d = \frac{G_t\,P_t}{4\,\pi\,R^2} \qquad \text{(Eq 7)}$$

Next, we need to look at the actual transmission loss between the source and receiver. This loss can be expressed as a ratio between the power received and the power radiated. With the aid of algebraic manipulation, a classical transmission loss relationship known as "the Friis expression for Free Space transmission loss" can be developed. Using Eq 7 and Eq 2, we have:

$$P_r = \frac{G_t\,P_t}{4\,\pi\,R^2}\,A_r \qquad \text{(Eq 8)}$$

Now, we multiply both the numerator and denominator by λ^2. The following results:

$$P_r = \frac{G_t\,P_t\,A_r\,\lambda^2}{4\,\pi\,R^2\,\lambda^2} \qquad \text{(Eq 9)}$$

Since transmission loss is the ratio between the power received and the power transmitted, we can say:

$$\frac{P_r}{P_t} = \frac{A_r\,G_t\,\lambda^2}{4\,\pi\,R^2\,\lambda^2} \qquad \text{(Eq 10)}$$

We will associate the term $(G_t\,\lambda^2)/(4\,\pi)$ in Eq 10 with the area of the transmitting antenna. We are therefore saying:

$$A_t = \frac{G_t\,\lambda^2}{4\,\pi} \qquad \text{(Eq 11)}$$

With this association, the transmission loss expression is:

$$\text{Transmission loss} = \frac{P_r}{P_t} = \frac{A_t\,A_r}{R^2\,\lambda^2} \qquad \text{(Eq 12)}$$

Although we have *constructed* the transmission loss relationship, its derivation is founded in field theory. Eq 12 is known as "Friis transmission-loss expression." Its physical derivation is somewhat involved and requires familiarity with Maxwell's field equations. Although we contrived Friis transmission-loss expression, by accepting it, the expression for antenna capture area can be more resolutely established. Friis expression is first solved for P_r.

$$P_r = \frac{P_t\,A_r\,A_t}{R^2\,\lambda^2} \qquad \text{(Eq 13)}$$

Next, equate Eq 13 to Eq 8.

$$\frac{P_r\,A_r\,A_t}{R^2\,\lambda^2} = \frac{G_t\,P_t\,A_r}{4\,\pi\,R^2} \qquad \text{(Eq 14)}$$

Clearing terms and solving for A_t and canceling out the A_r terms:

$$A_t = \frac{G_t\,\lambda^2}{4\,\pi} \qquad \text{(Eq 15)}$$

which is the expression for antenna area.

As expected, Eq 15 is the same expression as Eq 11 and is also expressed in square meters. This expression relates antenna capture area (or aperture) to antenna gain. Since antennas are theoretically reciprocal devices, by referring to the spherical model (Fig 1) we can consider an antenna that is located on the spherical surface to be the transmitting antenna and the antenna at the center of the sphere to be the receiving antenna. In that case:

$$A_r = \frac{G_r \lambda^2}{4\pi} \qquad \text{(Eq 16)}$$

In general terms the subscripts can be dropped and capture area or antenna aperture is related to antenna gain by:

$$A = \frac{G \lambda^2}{4\pi} \qquad \text{(Eq 17)}$$

The gain of an antenna varies directly with its capture area. Obviously, if the capture area of the antenna is known, its gain can be computed. Again, gain is expressed here as a ratio between actual antenna performance and isotropic (unity-gain) performance. Recall that we said an isotropic antenna has unity gain; ie, G =1 (or 0 dBi). Therefore an isotropic antenna has a definable capture area (aperture):

$$A_i = \frac{\lambda^2}{4\pi} = 0.08\,\lambda^2 \qquad \text{(Eq 18)}$$

Note, this is Eq 17, with G set equal to unity. Since $\lambda = 300/f$ with f expressed in MHz:

$$A_i = \frac{7{,}200}{f^2} \qquad \text{(Eq 19)}$$

The gains of several antennas with respect to their capture areas are presented in *Reference Data For Radio Engineers*, 6th Edition, page 27-44. Here we note that the gain of a half-wave dipole relative to an isotropic antenna is 1.64 (which is 2.15 dBi). In this case:

$$A_d = \frac{1.64\,\lambda^2}{4\pi} = 0.13\,\lambda^2, \qquad \text{(Eq 20)}$$

or in terms of frequency in MHz,

$$A_d = \frac{11{,}746}{f^2}$$

Determining Actual Field Strength E

We now have all the tools necessary to develop the desired relationship between received power (P_r) and field strength (E). Once we have developed this expression, by taking power measurements from a sampling or sensing antenna, we can readily determine the surrounding field strength. This is the physics on which this field-strength determination methodology is based.

By substituting Eq 3, which defines power density in terms of field strength, and Eq 16, the expression for receive antenna capture area, into Eq 2, which defines receive power in terms of power density and receive antenna capture area, we can finally formulate the relationship between field strength and receive power:

$$P_r = \frac{E^2 G_r \lambda^2}{4\pi\, 120\pi} = \frac{E^2 G_r \lambda^2}{30\left(4\pi\right)^2} \qquad \text{(Eq 21)}$$

Solving for E:

$$E^2 = \frac{P_r\, 30\left(4\pi\right)^2}{G_r \lambda^2} \qquad \text{(Eq 22)}$$

and

$$E = \sqrt{\frac{P_r\, 30\left(4\pi\right)^2}{G_r \lambda^2}} \qquad \text{(Eq 23)}$$

$$\lambda = \frac{300}{f_{MHz}} \qquad \text{(Eq 24)}$$

Substituting Eq 24 into Eq 23 and clearing terms:

$$E = \sqrt{\frac{P_r f^2}{19\,G_r}} \qquad \text{(Eq 25)}$$

with E expressed in V/m, f in MHz, P_r in W and G_r numerically. Both Eq 25 and Eq 23 provide us with our desired relationship between received power and field strength.

Determining the Radiated Power from the Source

By setting Eq 22 equal to Eq 5 and solving for P_t we can determine the radiated power:

$$P_t = \frac{P_r f^2 R^2}{570\,G_r} \qquad \text{(Eq 26)}$$

With P_t (the radiated power) now known, if the actual transmitter output power is also known, then we can determine the gain of the transmitting antenna system, taking into account transmission-line losses:

$$G_t = 10\log\left(\frac{P_t}{P_{Tx\,out}}\right), \text{in dBi} \qquad \text{(Eq 27)}$$

These supporting principles are the basis for the field strength measurement system described herein.

Field Strength Relationships – Summary

Table 1 is a summary of the key relationships just discussed. Conversions from Metric to English units have been made as shown.

The three shaded items in Table 1 contain the primary expressions used in computing field strength and radiated power using the field-strength meter.

The Field-Strength Measuring System

By connecting an antenna of known performance (such as a half-wave dipole) to a power meter, the measured resultant receive power (from a distant transmission source) can be used to determine field strength using Eq 25 at the receive site. There are several important precautions that must be taken into account to determine the field-strength value.

A Description of Antenna Factor, k:

Eq 25 in the main text is also the basis for a convention that is used by those engaged in measuring effects of Electromagnetic Interference (EMI). The EMI industry use spectrum analyzers to assess the received power. In actuality, the spectrum analyzer tool is simply calibrated in terms of received voltage. Since received voltage V_r is the square root of the product of received power and input impedance, Eq 25 can be written as a function of received voltage:

$$E = \frac{V_r f \pi}{75}\sqrt{\frac{30}{Z_r G_r}} \qquad \text{(Eq A)}$$

where Z_r is the input impedance of the spectrum analyzer, typically 50 Ω resistive.

A convention that EMI engineers and technicians have adopted is that of *antenna factor*. By measuring received voltage and multiplying it by the antenna factor, the field strength in volts per meter can be quickly computed.

EMI antenna manufacturers publish a set of antenna-factor information either in the form of a graph or a table that shows antenna factor vs frequency for the antennas they produce. This antenna factor is also called k. Factoring out V_r in Eq A:

$$k = \frac{f \pi}{75}\sqrt{\frac{30}{Z_r G_r}} \qquad \text{(Eq B)}$$

Eq A can then be reduced to:

$$E = V_r\, k \qquad \text{(Eq C)}$$

Table 1
Field Strength Relationships

Equation	*Equation*	*Terms and Units*
Eq 6	$E=\sqrt{\frac{30P_t}{R^2}}$	P_t (W) radiated; R, distance (m); E (V/m)
Eq 17	$A=\frac{G\lambda^2}{4\pi}$	A (m^2); G, numeric gain, isotropic; λ (m)
Eq 18	$A_i=0.08\lambda^2$, isotropic	A_i (m^2); λ (m)
Eq 19	$A_i=\frac{7{,}200}{f^2}$, isotropic	A_i (m^2); f (MHz)
Eq 20, part 1 λ/2 Dipole	$A_d=0.13\lambda^2$	A_d (m^2); λ (m)
Eq 20, part 2 λ/2 Dipole	$A_d=\frac{11{,}746}{f^2}$	A_d (m^2); f (MHz);
Eq 25 numeric Isotropic Measuring Antenna	$E=\sqrt{\frac{P_r f^2}{19G_r}}$	E (V/m); P_r (W received); F (MHz); G_r,
Eq 25 λ/2 Dipole Measuring Antenna	$E=\sqrt{\frac{P_r f^2}{31.16}}$	E (/m); P_r (W); f (MHz)
Eq 26 numeric Isotropic Measuring Antenna	$P_t=\frac{P_r f^2 R^2}{570G_r}$	P_t (W); P_r (W); f (MHz); R (m), G_r,
Eq 26 λ/2 Dipole Measuring Antenna (Metric)	$P_t=\frac{P_r f^2 R^2}{934.5}$	P_t (W); P_r (W); f (MHz); R (m)
Eq 26 λ/2 Dipole Measuring Antenna (English)	$P_t=\frac{P_r f^2 R^2}{10{,}055}$	P_t (W); P_r (W); f (MHz); R (m)

The Power Meter

A very effective power meter that you can readily construct was described by Wes Hayward, W7ZOI, and Bob Larkin, W7PUA, in the Jun 2001 issue of *QST*. The article is titled *Simple RF-Power Measurement*. The power meter is based on the Analog Devices AD8307AN logarithmic amplifier IC. This device enables RF power measurements as low as –70 dBm (70.7 µV RMS across 50 Ω) to slightly over +10 dBm, (707 millivolts RMS across 50 Ω).

The meter can be built exactly as described, but I happened to have a 100-µA meter instead of the 1-mA meter used by the authors. I also made provision for the use of an DVM or DC Oscilloscope. With the 100-µA meter, the isolation amplifier (U3 in the *QST* article) is not required. Pin 4 of the logarithmic amplifier has a full unsaturated output of 2.5 Volts with a nominal output impedance of 12.5 kΩ. I placed a 20-kΩ potentiometer in series with pin 4 of U1 and the meter and adjusted the pot for a meter reading of 91 µA with a +10-dBm, 150-MHz signal applied at the RF input.

Fig 2 is a schematic of the simplified version I built. To calibrate the power meter, it will be helpful to have access to a calibrated signal generator. If you do not have such access, you can adjust R5 for the +10 dBm reference level (90 µA) by making use of a QRP transmitter and power attenuators, as was described in the original *QST* article. Assuming you can set the +10 dBm level to 90 µA, the calibration data presented in **Table 2** may be used.

For all intents and purposes, the frequency response of both versions proved identical. The R1, R2, C1, C2, L1 network is a bit critical related to obtaining an acceptably flat frequency response. Be sure to keep leads very short and avoid long ground runs. Also be sure to build this meter within a shielded metal box. Housing it in a plastic project box will result in high ambient noise readings, reducing the meter's effective dynamic range. **Fig 3** shows my power meter being calibrated.

Note: L1 is a 1-turn loop wound on a 3/16-inch drill shank. See the referenced *QST* article for details.

The Sensing Antenna

The capture antenna is a simple TV rabbit-ears unit that I modified to accommodate a BNC connector for connection to either a balun or directly to the transmission line. I made a common-mode choke balun by coiling 3 turns of a 1-foot length of RG-174 coax (about 1 inch in diameter) and attaching mating BNC connectors to each end to place it between the antenna and the line. As will be discussed later, I found that it was not absolutely necessary.

The center insulator block of the rabbit ears can be opened by removing the two screws and nuts securing the antenna elements. There is also a rectangular plug that can be removed to make soldering of the coax or connector easier. With the block opened, I unsoldered the attached 300-Ω twin lead and soldered in a chassis-mount BNC connector, after drilling a mounting hole on the side of the plastic insulator body. I soldered the ground side of the connector to one of the elements and the center conductor to the other. See **Fig 4**. After reassembling the center insulator, I drilled a small hole at the bottom of it to accommodate a 2-foot length of $^5/_{16}$-inch plastic dowel rod as a support.

For a supporting mast, I used a a 5-foot length of $^3/_4$-inch ID PVC pipe. At what would be the top end of the mast, I drilled a $^5/_{16}$-inch hole through both sides of the pipe to accommodate the antenna support rod. For a base, I used an old Christmas tree stand. I put the support rod of the antenna into the $^5/_{16}$-inch hole. In this manner, I could adjust the dipole for either horizontal of vertical polarization. See **Fig 5**.

Table 2

Calibration Chart

Power Level, dBm	*Meter Reading, mA*
+20	96
+10	91
0	80
-10	70
-20	60.5
-30	51.5
-40	42
-50	32.5
-60	23
-70	13.5
-80	9

With this arrangement, I can move the dipole resonance from 70 MHz to about 300 MHz, simply by adjusting the telescoping elements. For measurements down to 50 MHz, I clip on additional stiff wire to obtain resonance. For the transmission line, be sure to use 50-Ω coax. By using a reasonable length of line (less than 10 feet), the meter can be positioned away from the antenna so it doesn't disturb its radiation characteristics. The use of 50-Ω coax creates a controlled mismatch at the coax to antenna junction. The reason for this is given in the next section.

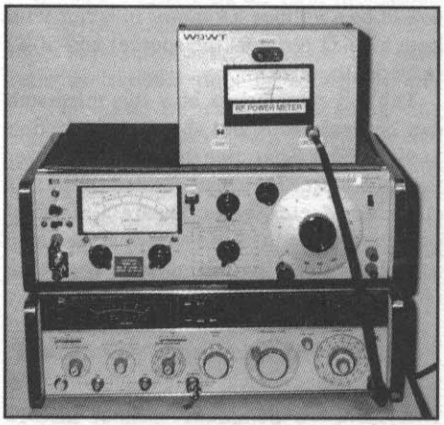

Fig 3—Photo of RF power meter being calibrated with the aid of a signal generator.

Precautions—Termination-Impedance Correction Factors

The power meter has an input impedance of 50 Ω, resistive. A resonant half-wave dipole antenna has a nominal termination impedance of 75 Ω in free space. For work here on Earth, however, a horizontally polarized λ/2 dipole will exhibit different radiation resistances depending on its height above ground. The same holds true for vertically polarized dipoles, but such variations are less pronounced. For resonant dipoles, the termination impedance will be the dipole's radiation resistance. In practice, dipoles are very efficient and losses can be considered negligible provided the antenna is kept in clear and at least a few wavelengths away from other objects. We

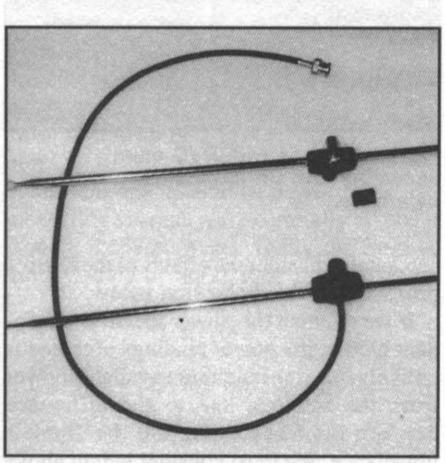

Fig 4—Receive antenna, with center block opened. One antenna is modified per the text to accommodate a female BNC connector. The other has the coax soldered directly to the elements.

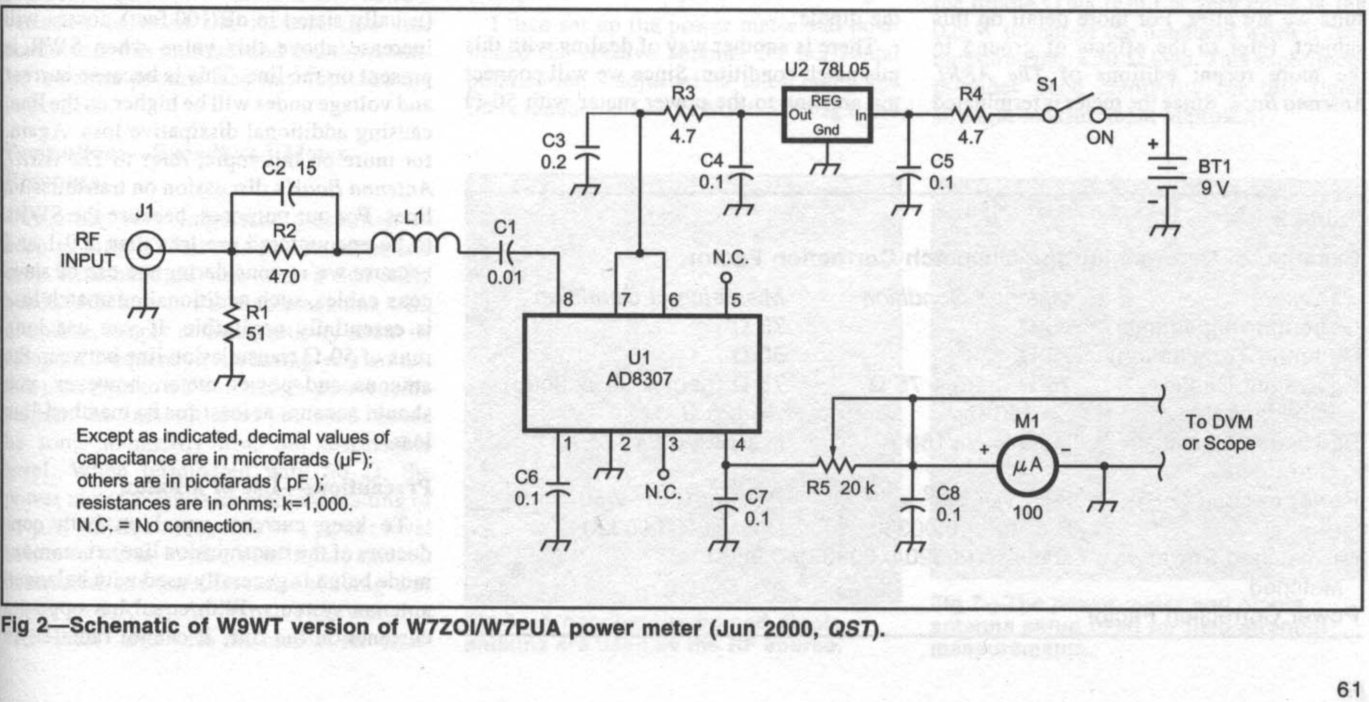

Except as indicated, decimal values of capacitance are in microfarads (µF); others are in picofarads (pF); resistances are in ohms; k=1,000.
N.C. = No connection.

Fig 2—Schematic of W9WT version of W7ZOI/W7PUA power meter (Jun 2000, *QST*).

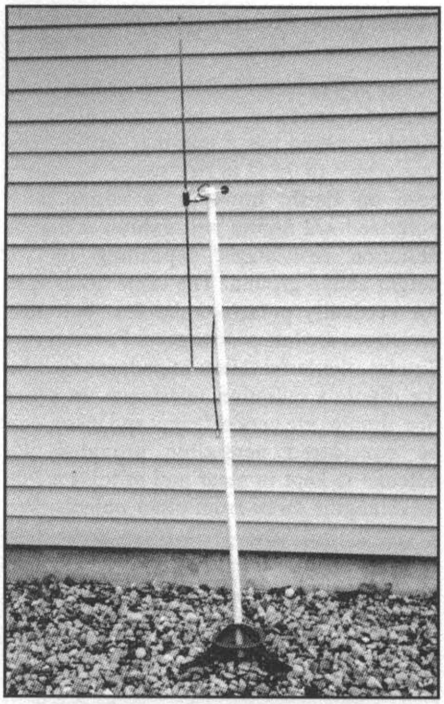

Fig 5—Antenna with PVC mast assembly and Christmas-tree stand as a base.

separately consider the effects of the Earth's proximity in the discussion below.

If we connect the power meter to a resonant dipole, the power readings obtained is unlikely to be the maximum available power from the antenna, due to the difference between the 50-Ω meter and the dipole's impedance. We must consider height above ground (with the resulting mismatch) into account in using Eq 25 for determining field strength.

For heights above about 0.3 λ, loss due to these mismatched conditions is not that great but in some cases will impact the results we are after. For more detail on this subject, refer to the effects of ground in the more recent editions of *The ARRL Antenna Book*. Since the meter is terminated in 50 Ω, we use 50-Ω coax between our antenna and the meter. Any mismatch will then occur at the antenna termination. It is possible to construct a mismatch correction factor table for both horizontally and vertically polarized λ/2 resonant dipoles placed at differing heights.

Precautions—Constructing the Mismatch Table

We really need to know the *available power* delivered by the dipole. One way to determine the effects of a mismatch is to use simple network-theory analysis. Consider a voltage generator in series with its source impedance and also in series with a load impedance. In this case, the source impedance represents the antenna's radiation resistance and the load impedance represents the termination impedance of the power meter. For example, for cases where the source impedance is 75 Ω and the meter impedance is 50 Ω an equivalent circuit would be a voltage generator in series with both a 75-Ω resistor (the source) and 50-Ω resistor (the load).

Table 3 summarizes how this mismatch can be dealt with and shows a correction factor used to determine the available power from the source (antenna). To determine this correction factor, you compare a matched condition (both load and source at the same impedance) and the mismatched condition (source of 75 Ω and load of 50 Ω).

If we connect the 75-Ω dipole by a short length of 50-Ω coax to the power meter, what the meter is measuring is actually 96% of the *available power from the dipole*. (We are neglecting coax losses here. If the coax line is long, its loss obviously should be accounted for.) For this case, simply divide the measured power measured in W by 0.96 to get the maximum power available from the dipole.

There is another way of dealing with this mismatch condition. Since we will connect the antenna to the power meter with 50-Ω coax, this method should be of interest. By using 50-Ω coax we are establishing a mismatch at the antenna terminals. The ratio of the reflected power to the forward (delivered) power as a result of this mismatch is:

$$\frac{P_{refl}}{P_{fwd}} = \rho^2 = \left[\frac{SWR-1}{SWR+1}\right]^2 \qquad \text{(Eq 28)}$$

where ρ (rho) is the reflection coefficient.

Picking up on our specific mismatch example above, a 50-to-75-Ω mismatch has a SWR of 1.5. From Eq 28 the reflected-to-forward power ratio $\rho^2 = 0.04$. Under mismatched conditions, the power meter will measure, as a percentage, the difference between the forward power and reflected power divided by the forward power. The percentage of available power that the meter reads is thus:

$$\frac{P_{fwd} - P_{refl}}{P_{fwd}} \times 100\% = \left(1 - \frac{P_{refl}}{P_{fwd}}\right) \times 100\%$$

$$= \left(1 - \rho^2\right) \times 100\% \qquad \text{(Eq 29)}$$

In other words, if there were no reflected power, the meter would read 100% of the available power being delivered by the dipole antenna. Considering our example, $(1 - \rho^2)$ would be $(1 - 0.04) = 0.96$, which is the same result we obtained using simple network analysis above.

Table 4 provides these correction factors for height of the antenna above ground. The termination resistance values given were taken from *The ARRL Antenna Book.*

Precautions—Matched Coax Line Loss and SWR Losses

In addition to matched coax line loss (usually stated in dB/100 feet), losses will increase above this value when SWR is present on the line. This is because current and voltage nodes will be higher on the line, causing additional dissipative loss. Again, for more on this topic, refer to *The ARRL Antenna Book*'s discussion on transmission lines. For our purposes, because the SWRs to be encountered are less than 2.0:1 and because we're considering the use of short coax cables, such additional mismatch loss is essentially negligible. If you use long runs of 50-Ω transmission line between the antenna and power meter, however, you should account at least for its matched-line loss.

Precautions—Use of a Balun

To keep currents equal on both conductors of the transmission line, a common-mode balun is generally used with balanced antenna systems. With equal but opposite currents on the line, it cannot radiate. As

Table 3

Example of Determining the Mismatch Correction Factor.

Parameter	*Matched Condition*	*Mismatched Condition*
Generator Impedance	75 Ω	75 Ω
(Antenna Termination)	75 Ω	50 Ω
Equivalent Circuit Impedance	75 Ω (gen) + 75 Ω = 150 Ω	75 Ω (gen) + 50 W (load) = 125 Ω
Equivalent Circuit Current	$I_{match} = V_g/150$ A	$I_{mismatch} = V_g/125$ A
Power to Load (I^2R)	$P = (V_g/150)^2 \times 75$ $P = V_g^2 \times 0.00333$	$P = (V_g/125)^2 \times 50$ $P = V_g^2 \times 0.00320$
Mismatched Power vs Matched Power Correction Factor	Ratio = (00320/0.00333)=0.96 or 96%	

Table 4

Power-Meter Correction Factors For $\lambda/2$ Dipole Height Above Real Ground

Height λ	Terminal R Horizontal Ω	SWR 50 Ω	Correction Factor Horizontal	Terminal R Vertical Ω	SWR 50 Ω	Correction Factor Vertical
0.1	47	1.06	**0.999**	89	1.78	**0.921**
0.2	66	1.32	**0.981**	80	1.60	**0.946**
0.3	97	1.94	**0.898**	73	1.46	**0.965**
0.4	90	1.80	**0.918**	70	1.40	**0.972**
0.5	70	1.40	**0.972**	69	1.36	**0.976**
0.6	58	1.16	**0.995**	70	1.40	**0.972**
0.7	68	1.36	**0.976**	72	1.44	**0.967**
0.8	80	1.60	**0.946**	74	1.48	**0.963**
0.9	82	1.64	**0.941**	75	1.50	**0.960**
1.0	72	1.44	**0.967**	76	1.52	**0.957**

mentioned earlier, antenna systems can be treated as reciprocal devices, receiving as well as they transmit. To keep the transmission line itself from acting as an antenna element, use of the balun is warranted.

I made a simple common-mode balun as previously described. RG-174 exhibits a matched-line loss of 10 dB per 100 feet at 100 MHz. I measured the loss of the three-turn balun with associated mating connectors at 0.2 dB at 100 MHz and 0.7 dB at 300 MHz. I made all field-strength experiments (described later) with and without the use of this balun. Other than the matched-line loss, I did not observe any perceptible difference in power meter readings either with or without the balun.

In both experiments, I took care to dress the transmission line perpendicular to the antenna by securing it to the support arm. I can only conclude that for low-SWR, perpendicular-geometry situations, current variation between the transmission line conductors was minimal and that the resultant antenna pattern was not substantially influenced.

Precautions—Broadband Meter Response

Another very important precaution to keep in mind is that this power meter is a very broadband device, with a 500-MHz bandwidth. Use of the dipole antenna will, of course, supply some selectivity about its resonant frequency. Assuming you do not live next door to a TV or a high-power radio station, the ambient level you read should be some nominally low, but discernible level. When terminated with 50 Ω, the power meter exhibits an ambient reading of 11 µA, which corresponds to a power level below –80 dBm. With a VHF dipole antenna connected, the ambient noise reading was about 30 mA or –53 dBm. (This was in a "RF quiet" area with the closest RF emitter—a cellular base station—about 2 miles distant).

If you are measuring the field strength of, let's say, a handheld portable, key it up a few times to be sure that the meter reads up scale from the residual floor by at least 10 dB. If you have difficulty determining any significant upscale reading with the source transmitter keyed, then you made need to use a bandpass filter. If you do need one, just be sure to account for its insertion loss. This should be easily measurable if you have access to a good signal generator. A simple parallel tuned circuit should suffice.

Determining Field Strength

Use of this field-strength measuring system is best explained by presenting results of some experiments that I ran. The first involved using my 2-meter handheld radio, setting it to the low-power position. I measured its output into a 50 Ω load at 0.6 W.

I then set up the power meter and positioned the receive antenna for horizontal polarization. I adjusted the telescoping tips for resonance at 147.58 MHz. See **Fig 6** and **7**. With the antenna connected to the power meter, I connected another dipole antenna (also resonant at 147.58 MHz and horizontally polarized) to the handheld and placed it about 16 feet away from the power meter's antenna.

On 2 meters, one wavelength is about 7 feet 4 inches. The spacing of the two antennas was thus just a bit more than 2 λ. It is generally accepted that the near/far-field boundary is $D = 2L^2/\lambda$, where L is the largest dimension of the antenna (in this case, about 1 meter, since it is a resonant dipole). Accordingly, the near/far-field boundary works out to be about one meter. With the two antennas 16 feet apart, the measurements would be in the far-field region, where the electric-field behavior is predictable.

With the handheld keyed and delivering power to its horizontal $\lambda/2$ dipole, I took several measurements. All readings were within a half µA of 80 µA. According to the calibration chart, the meter was reading close to 0 dBm or 1 mW. (Note: Power in mW = $10^{(\mathrm{dBm}/10)}$). Due to the mismatch condition, the available power from the measuring antenna was essentially at 0.001/0.96 or 0.00104 Watts. Using the English units version of Eq 26 (see Table 1):

$$P_t = \left(P_r\, f^2\, R^2\right)/10055 =$$
$$\left(0.00104 \times 147.58^2 \times 16^2\right)/10055$$
$$= 0.00104 \times 555.54 = 0.579\ \mathrm{W}.$$

This is the *radiated* power from the source (the handheld's dipole in this case). The dipole used with the handheld also had the same mismatch as the measuring antenna. In actuality, the handheld was thus delivering 0.579/0.96 W = 0.603 W to the dipole. This result is very close to the 0.6-W output of the handheld when it was measured into a 50-Ω load. This experiment provides good credibility for this field-strength measurement approach!

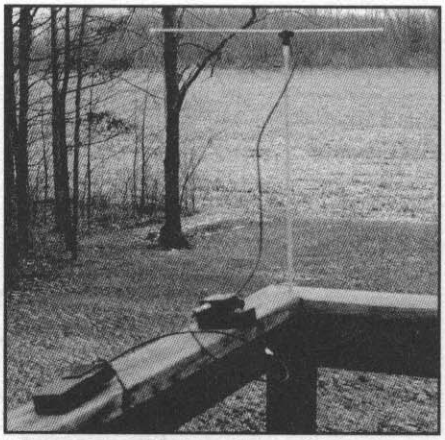

Fig 6—A handheld radio and dipole antenna are used as the RF source.

Fig 7—The power meter and dipole antenna setup used for field-strength measurements.

Since our purpose is to determine field strength, let's compute what it is. According to the English-units version of Eq 25:

$$E=\sqrt{P_r\ f^2\ /31.16}=\left(0.00104\times 147.58^2\right)$$

$$/31.16=0.848\ \mathrm{V/m}$$

Recall that when we developed this expression for field strength, we accounted for the capture area of the resonant dipole antenna. Notice that the measured power reading of 1 mW was also adjusted for mismatch losses by dividing the measured power by 0.96, the 75-Ω-to-50-Ω mismatch correction factor. Since the expression for P_t (the radiated source power) and the expressions developed for field strength are interrelated both physically and mathematically, the above experiment to determine the radiated power supports an acceptable accuracy of the field-strength calculation too.

Second Experiment

I always wanted to know the gain of my handheld's rubber ducky. I set up the power meter antenna for vertical polarization and attached the rubber ducky to the handheld radio. I set the handheld to the high-power position, which according to a wattmeter measurement into a 50-Ω load was 5.2 W. With the portable again 16 feet from the measuring antenna, the power meter read 78 µA, which corresponds to about –2 dBm, or 0.63 mW. Using the same method described in the first experiment to determine the radiated power:

$$P_t=P_r\ f^2\ R^2\ /10055$$

$$=0.0063\times 147.58^2\times 16^2\ /10055$$

$$=0.0063\times 555.54=0.35\ \mathrm{W}$$

Taking into account the measuring antenna's mismatch, the radiated power determined by the field-measurement system, turns out to be 0.35/0.96 W =0.367 W. Assuming the rubber ducky is a matched 50-Ω antenna, its *apparent gain* is: Gain (Isotropic) = 10 log (0.365/5.2) = –11.5 dBi.

I thought its performance would be a bit anemic, but this is worse than I expected! Note that some of the negative gain of the rubber ducky is due to its internal losses. After long transmissions the antenna does indeed feel somewhat warm. The rubber ducky isn't the best choice for fringe area communications, something we already knew!

What about HF?

You could extend these principles to the lower frequencies and make field measurements with full-sized dipoles, taking into account the feed-point impedance variations due to height above ground. If you have access to an impedance meter (an R + *j* X meter), you might want to construct a shortened dipole and compare its performance to a full-size dipole at the same height.

Based upon this scaled difference, you could compute the capture area of the smaller antenna. With the aid of the R + *j* X meter, you could measure its impedance. By tuning out any reactance at the feed point, the resultant resistive mismatch could be accounted for and a representation of captured power could be determined. All this, however, is subject for additional study.

Conclusions

With the aid of a sensitive power meter and knowledge of receiving-antenna performance, you can determine the electric field strength. By making a received-power measurement, you can gain knowledge about the radiating source. Further, by knowing the power of the associated transmitter, the properties of the transmitting antenna system can be determined.

I've demonstrated a method to determine field strength that most radio amateurs can readily employ without the need of sophisticated equipment. I would like to thank Carl Luetzelschwab, K9LA, for encouraging me to write this article. Thanks also go to Craig Brown, W9CB, and Charlie Hall, KC9LA, for reviewing this work and providing perceptive comments.

SWR Bandwidth

By Frank Witt, AI1H
41 Glenwood Road
Andover, MA 01810-6250
ai1h@arrl.net

A useful concept in the measurement and operation of antenna systems.

The parameter *standing wave ratio* (SWR) is very useful and is broadly used in describing the behavior of antenna systems. However, the term SWR is sloppily used both in amateur and professional circles. This article addresses this misuse but unfortunately, of necessity, perpetuates it.

The focus here is on the concept of *SWR bandwidth.* This is an operationally significant concept since it describes how far you can stray from the center frequency of an antenna system tuned to resonance and still expect a low SWR. We will apply the concept to antenna systems with and without antenna tuners. The tuning sensitivity of antenna tuners and the Q of resonant antennas, such a half-wave dipoles, will be found through the use of SWR bandwidth.

What Does an SWR Meter Measure?

Fig 1 shows a simplified system: the transmitter, an SWR meter and the load impedance. Modern transmitters are designed to operate properly into a nominal 50-Ω impedance load, and they will deliver full power into the load impedance. This is one reason that the reference impedance of most SWR meters is also 50 Ω. Often the SWR meter is built into the transmitter or the antenna tuner to which it is connected.

What is the "SWR meter" measuring? There is no transmission line in Fig 1 and hence *no standing waves*. If there were a transmission line between the SWR meter and the load impedance and the characteristic impedance of the line were 50 Ω, the meter would be reading the SWR on the line near the transmitter end of the line. Only if the line were lossless would the SWR reading apply all along the line.

If the characteristic impedance of the line is not 50 Ω, the SWR reading could not be interpreted as the line SWR, since the reference impedance of the SWR meter is 50 Ω. More generally, for an SWR meter to accurately display the standing wave ratio on a line, the reference impedance of the meter must be the same as the characteristic impedance of the line.

The point is that we often use a 50-Ω SWR meter even when there is no 50-Ω trans-mission line. Often the primary function of the SWR meter is to measure the *suitability* of the load impedance for connection to a transmitter designed to deliver maximum undistorted power into a 50-Ω load, not the standing wave ratio on a transmission line. In effect, the SWR meter measures the impedance mismatch between its own reference impedance and whatever impedance appears at the meter's output port.

We live with our sloppy use of the SWR concept. The SWR meter is actually reading a circuit condition at a single point in the system. In fact, the meter really measures magnitude of the reflection coefficient, but is *calibrated* in SWR units. The relationships between the load impedance, Z_L, reflection coefficient, ρ, and the load SWR are as follows:

$$\rho=\frac{Z_L-R_{REF}}{Z_L+R_{REF}} \quad \text{(Eq 1)}$$

$$SWR=\frac{1+|\rho|}{1-|\rho|} \quad \text{(Eq 2)}$$

$$|\rho|=\frac{SWR-1}{SWR+1} \quad \text{(Eq 3)}$$

where R_{REF} is the reference impedance of the SWR meter.

The term SWR or standing wave ratio applies to waves that only have spatial significance. It would have been more accurate to calibrate the meter scale in reflection-coefficient magnitude units instead and call them "reflection-coefficient meters." An equivalent accurate statement of the condition at a single point is return loss, RL, which has the units of dB.

$$RL=-20\log|\rho| \quad \text{(Eq 4)}$$

Some SWR meters, especially the popular low-power units that also measure impedance, display |ρ| and/or RL as well. In fact, the |ρ| value displayed is generally more accurate than either the SWR or RL values. But most SWR meters that are used as a part of an operational station running at

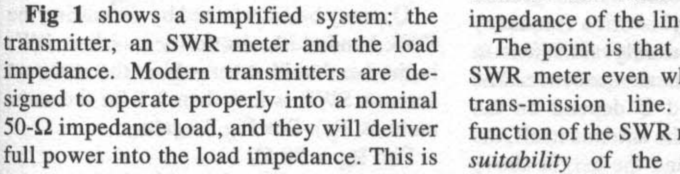

Fig 1—Placement of an SWR meter in a typical system.

full power read only SWR, so the current terminology misuse will undoubtedly continue. In other words, we are stuck with it!

Table 1 shows some SWR values of interest and their reflection-coefficient magnitude and return-loss equivalents.

Worth noting is that the reading on the SWR meter in Fig 1 is totally independent of the output impedance of the transmitter. It is worth reflecting on this fact to realize that the issue of the "impedance match" between the transmitter and its load has no bearing on the matters discussed in this article. This is often an unnecessary point of confusion.

What is SWR Bandwidth?

The concept of SWR bandwidth is useful for any antenna system. For example, many antenna manufacturers advertise the bandwidth over which the SWR of the antenna for a given band is less than 2:1. More precisely, the manufacturer is telling us what the SWR bandwidth would be on a low-loss 50-Ω transmission line connected to the antenna.

Most modern transceivers will deliver full power into the load impedance when the SWR meter reads less than about 1.5:1. Loads beyond this limit may cause the transceiver to protect itself by lowering the output power. Many transceivers have built-in automatic antenna tuners for loads outside the 1.5:1 SWR value, but their matching range is limited, particularly on the lower-frequency bands. For tube-type high-power amplifiers with tunable output stages, the operation is usually also best if the load SWR is less than 2:1, since the amplifier output network components are commonly rated to handle such loads. In practice, operation is simplified if the SWR is less than 2:1.

Table 1

SWR	Reflection Coefficient Magnitude	Return Loss dB
1	0	Infinite
1.5	0.200	13.98
2	0.3333	9.54
Infinite	1	0

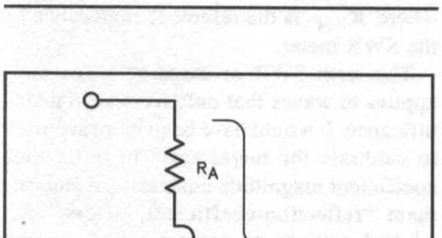

Fig 2—The equivalent circuit of a resonant antenna. The simple series RLC approximation applies to many resonant antenna types, such as dipoles, monopoles and loops. R_A, Q_A and F_0 are properties of the entire antenna, as discussed in the text.

We define SWR bandwidth, which is in frequency units, to be BW_{SM}, where S_M is the SWR bandwidth limit, say 1.5:1 or 2:1. As discussed above, it would be more accurate to use "reflection-coefficient bandwidth" or "return-loss bandwidth," but these terms are not likely to catch on.

Resonant Antenna Parameters from SWR Measurements

For resonant antennas operating near resonance, SWR bandwidth may be used to find the antenna parameters. Typical resonant antennas include half-wave dipoles, quarter-wave verticals over a ground plane and full-wave loops. Consider the antenna feed-point impedance near resonance. **Fig 2** shows the equivalent circuit. Although the series RLC circuit is an approximation, it is close enough for our purposes.

Note that the impedance is defined by F_0, the resonant frequency, R_A, the antenna resistance at resonance and Q_A, the antenna Q. R_A is actually the sum of the radiation resistance and any loss resistance, including conductor losses and losses induced by surrounding objects, such as the ground below the antenna. R_A is often frequency dependent, but it is usually sufficient to assume it is constant near resonance. The antenna resistance and Q depend on the physical properties of the antenna itself, the properties of ground and the height above ground.

Fig 3 shows the typical bowl-shaped SWR versus frequency characteristic for a resonant antenna. The resonant frequency, F_0, is where the SWR minimum, S_0, occurs. By making only SWR measurements, you may determine the antenna parameters. The equations below apply if the measurements are made with a 50-Ω SWR meter connected to the antenna terminals. The same equations apply if a low-loss 50-Ω transmission line is placed between the SWR meter and the antenna. You must take into account the loss of the feed line if the measurement must be made at the end of a long 50-Ω transmission line, but the same principle applies. See **Appendix 1** for the equations that allow the transmission line loss to be taken into account. The minimum SWR occurs at F_0 regardless of the length or loss of the line.

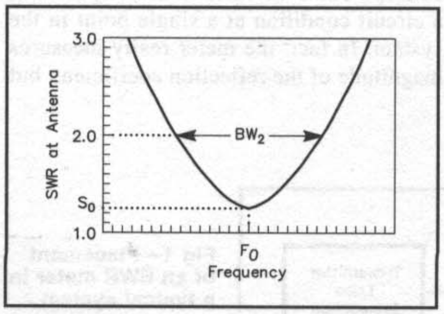

Fig 3—SWR at the antenna versus frequency in the vicinity of resonance.

R_A can be measured using SWR measurements at resonance. If the line loss is low or if the measurement is made at the antenna terminals, the formulas given below apply.

For $R_A > 50$ Ω:

$$R_A = S_0 \times 50 \qquad \text{(Eq 5)}$$

For $R_A < 50$ ohms:

$$R_A = \frac{50}{S_0} \qquad \text{(Eq 6)}$$

There is an ambiguity, since we do not know if R_A is greater than or less than 50 Ω. A simple way of resolving this ambiguity is to take the same SWR measurement at resonance with a 10-Ω non-inductive resistor added in series with the antenna impedance. If the SWR goes up, $R_A > 45$ Ω. If the SWR goes down, $R_A < 45$ Ω. This will resolve the ambiguity.

Q_A may be determined by measuring the SWR bandwidth. As defined earlier, BW_2 is the bandwidth over which the resonant antenna SWR is less than 2:1 (in the same units as F_0). See Fig 3 again.

For $R_A > 50$ Ω:

$$Q_A = \frac{F_0}{BW_2}\sqrt{2.5 S_0 - S_0^{\,2} - 1} \qquad \text{(Eq 7)}$$

For $R_A < 50$ Ω:

$$Q_A = \frac{F_0}{BW_2 \times S_0}\sqrt{2.5 S_0 - S_0^{\,2} - 1} \qquad \text{(Eq 8)}$$

See Appendix 1 for how these equations may be applied when the loss of the feed line cannot be neglected.

Application to Antenna Tuners

One of our goals is to get as much transmitter output energy to the antenna as possible so it can be radiated. Antenna tuners solve this problem in some cases, although losses in transmission lines, baluns and the antenna tuner itself can be excessive. Through some simple measurements, the loss, SWR bandwidth and balance quality (for balanced loads) may be found. See Notes 1 and 2 for a description of how a low-power SWR meter and a geometric-resistance box can provide great insight into the performance of antenna tuners.

Several powerful antenna tuner design and evaluation tools, *AAT* and *TLW*, written by Dean Straw, N6BV, have been bundled with recent editions of *The ARRL Antenna Book*. The *TLW* program[3] "tunes" the antenna tuner to transform the arbitrary load at its output to 50 Ω at its input. It then calculates the loss, $BW_{1.5}$ and BW_2.

It is obvious why we want to know the loss. Why do we want to know the SWR bandwidth? Knowledge of the SWR bandwidth will show how far off the center frequency you can move without having to retune the antenna tuner. Also, if the SWR bandwidth is small, tuning the antenna tuner can be very difficult.

In an operating system, SWR bandwidth is found by first tuning the antenna tuner so that the SWR meter reads 1:1. Then change the frequency up and down to find the upper and lower SWR = 1.5:1 or SWR = 2:1 frequencies. The difference of these two frequencies is $BW_{1.5}$ (the 1.5:1 SWR bandwidth) or BW_2 (the 2:1 SWR bandwidth), respectively. This quantity is often presented as a percentage of the center frequency, F_C:

$$\%BW = \frac{BW}{F_C} \times 100 \qquad \text{(Eq 9)}$$

An example will illustrate how the SWR bandwidth changes with load impedance. *TLW* is used to evaluate a CLC T-network tuner. The tuner has input and output capacitors with a 240-pF maximum capacitance and the inductor has 25-uH maximum inductance. The Q of the capacitors is 1000 and the Q of the inductor is 300.[4] Calculations were made for resistive loads ranging from about 3 Ω to 800 Ω and for the 160- and 80-meter bands. It is primarily on those bands where component size controls the SWR bandwidth. The *TLW* screens for one of the cases is shown in **Fig 4**. Note that *TLW* calculates both $BW_{1.5}$ and BW_2. See **Table 2** for the $BW_{1.5}$ results.

Experience has shown that antenna tuners are very touchy to tune if the 1.5:1 %BW is less than two percent. Study of Table 2 reveals that the lower resistance loads cause higher tuning sensitivity. This fact is true for the T-network tuner topology. Other topologies will behave differently. Higher tuning sensitivity usually accompanies higher antenna tuner loss. This results from the high circulating currents that accompany small %BW's. However, even if the antenna tuner is made from lossless components, the tuner can still have touchy tuning behavior.

What can be done about this tuning sensitivity? For the antenna tuner used in the example, the maximum capacitance of both capacitors is 240 pF. We will double the maximum value of the output capacitor to 480 pF. **Table 3** compares the 1.5:1 %BW for three CLC T-network tuners with a 12.5-Ω resistive load and an operating frequency of 1.9 MHz. The three cases are the original tuner, the same tuner made with lossless components and the tuner with a 480-pF output capacitor.

Table 2

Load Resistance	*1.5:1 SWR Bandwidth*			
(Ω)	*160 meters (1.9 MHz)*		*80 Meters (3.8 MHz)*	
3.125	8.7 kHz	0.5 %	28.8 kHz	0.8 %
6.25	13.3 kHz	0.7 %	48.3 kHz	1.3 %
12.5	21.7 kHz	1.1 %	84.4 kHz	2.2 %
25	36.3 kHz	1.9 %	152.8 kHz	4.0 %
50	59.6 kHz	3.1 %	281.8 kHz	7.4 %
100	69.7 kHz	3.7 %	344.2 kHz	9.1 %
200	80.7 kHz	4.2 %	407.6 kHz	10.7 %
400	91.3 kHz	4.8 %	467.3 kHz	12.3 %
800	101.6 kHz	5.3 %	420.7 kHz	11.1 %

Table 3

Load Resistance = 12.5 ohms, 160 meters (1.9 MHz)

Condition	1.5:1 % SWR Bandwidth
Lossy tuner with C_{OUT} = 240 pF	1.1 %
Lossless tuner with C_{OUT} = 240 pF	1.0 %
Lossy tuner with C_{OUT} = 480 pF	2.2 %

It is clear that the tuning sensitivity is mostly affected by the size of the output capacitor. The doubling of the output capacitor's capacitance has the effect of doubling the SWR bandwidth for this case. Reducing the tuner loss only makes the tuning slightly more sensitive. This makes sense, since the lossy components serve to decrease the Q of the input impedance of the tuner, which looks like a series RLC circuit, where R = 50 Ω. A technique for calculating the SWR bandwidth is given in Appendix 2.

Summary

Even though the terms *SWR* and *SWR bandwidth* are sloppily used, understanding them can lead to some very useful information. We have shown their utility in the measurement of resonant antenna im- pedance, both at the antenna and at the transmitter end of the transmission line. We have emphasized the importance of the measurement or calculation of the SWR bandwidth of a tuned antenna tuner.

The helpful comments of Chris Kirk, NV1E, are most appreciated.

Notes and References

[1] F. Witt, "How to Evaluate Your Antenna Tuner," *QST, Part 1*, Apr 1995, pp 30-34, and *Part 2*, May 1995, pp 33-37.

[2] Review: "*QST* Compares: Four High-Power Antenna Tuners," *QST*, March 1997, pp 73-77.

[3] *TLW*, Transmission Line Program for Windows, by Dean Straw, N6BV. This program is bundled with the 19th Edition of *The ARRL Antenna Book*. Earlier editions contained *TLA*, an MS DOS version of the program.

[4] These parameters are similar to those of the MFJ Model MFJ-989C Versa Tuner. The $BW_{1.5}$ values calculated using *TLW* agree closely with those measured and reported in Note 2.

[5] F. Witt, "Transmission Line Parameters from Measured Data," *The ARRL Antenna Compendium, Vol 6*, (Newington: ARRL, 1999), p 187.

Appendix 1

Compensating for Transmission-Line Loss

To measure the resonant antenna parameters using only SWR measurements, the SWR at the antenna must be known. These values may be calculated from SWR measurements made at the transmitter end of a lossy transmission line. First, however, the matched-line loss of the transmission line at F_0, the antenna resonant frequency, must be estimated or measured.

To estimate it from manufacturer's data,

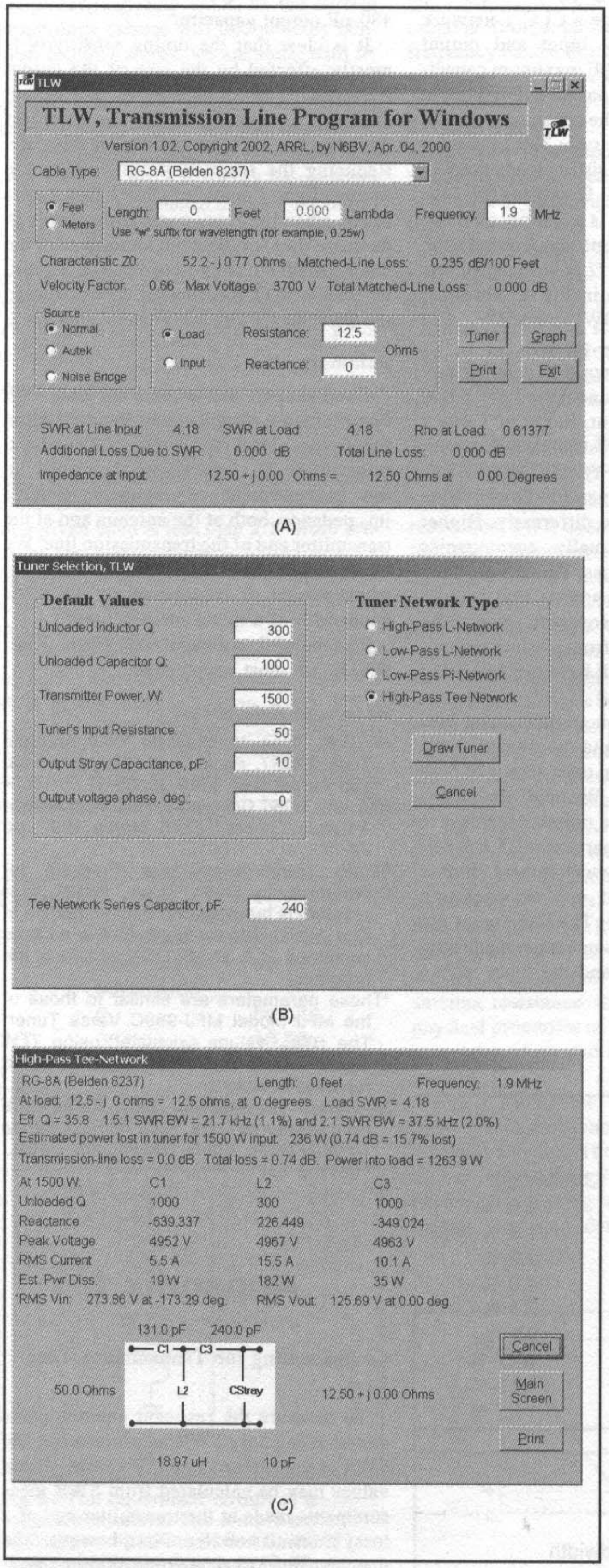

TLW, Transmission Line Program for Windows

Version 1.02, Copyright 2002, ARRL, by N6BV, Apr. 04, 2000

Cable Type: RG-8A (Belden 8237)

● Feet ○ Meters Length: 0 Feet 0.000 Lambda Frequency: 1.9 MHz

Use "w" suffix for wavelength (for example, 0.25w)

Characteristic Z0: 52.2 - j 0.77 Ohms Matched-Line Loss: 0.235 dB/100 Feet

Velocity Factor: 0.66 Max Voltage: 3700 V Total Matched-Line Loss: 0.000 dB

Source: ● Normal ○ Autek ○ Noise Bridge

● Load ○ Input Resistance: 12.5 Reactance: 0 Ohms

SWR at Line Input: 4.18 SWR at Load: 4.18 Rho at Load: 0.61377

Additional Loss Due to SWR: 0.000 dB Total Line Loss: 0.000 dB

Impedance at Input: 12.50 + j 0.00 Ohms = 12.50 Ohms at 0.00 Degrees

Default Values

Unloaded Inductor Q: 300

Unloaded Capacitor Q: 1000

Transmitter Power, W: 1500

Tuner's Input Resistance: 50

Output Stray Capacitance, pF: 10

Output voltage phase, deg.: 0

Tuner Network Type

○ High-Pass L-Network

○ Low-Pass L-Network

○ Low-Pass Pi-Network

● High-Pass Tee Network

Tee Network Series Capacitor, pF: 240

```
RG-8A (Belden 8237)                Length:  0 feet          Frequency:  1.9 MHz
At load:  12.5 - j  0 ohms =  12.5 ohms, at  0 degrees.  Load SWR = 4.18
Eff. Q = 35.8   1.5:1 SWR BW = 21.7 kHz (1.1%) and 2:1 SWR BW = 37.5 kHz (2.0%)
Estimated power lost in tuner for 1500 W input:  236 W (0.74 dB = 15.7% lost)
Transmission-line loss = 0.0 dB.  Total loss = 0.74 dB.  Power into load = 1263.9 W
At 1500 W:         C1             L2             C3
Unloaded Q         1000           300            1000
Reactance          -639.337       226.449        -349.024
Peak Voltage       4952 V         4967 V         4963 V
RMS Current        5.5 A          15.5 A         10.1 A
Est. Pwr Diss.     19 W           182 W          35 W
RMS Vin:   273.86 V at -173.29 deg.   RMS Vout:  125.69 V at 0.00 deg.

              131.0 pF    240.0 pF

  50.0 Ohms                               12.50 + j 0.00 Ohms

              18.97 uH      10 pF
```

Fig 4—*TLW* input and results screens for the CLC T-network tuner studied. The load impedance is for this case is 12.5 Ω and the frequency is 1.9 MHz.

the physical length of the cable must be known. Manufacturers publish the matched loss at a selected set of frequencies. The frequency nearest F_0, say F_1, should be used and the following formula applied.

$$A_0 = A_1 \sqrt{\frac{F_0}{F_1}} \qquad \text{(Eq 10)}$$

where A_0 = matched loss at F_0 in dB, and

A_1 = matched loss at F_1 in dB.

This method is close enough for most purposes.

Measurement of the transmission line loss is another alternative. In this case, the length of the cable need not be known. An accepted method for determining the matched-line loss of a cable is to measure the reflection-coefficient magnitude, or equivalently, the SWR at one end of the cable when the other end of the cable is either open- or short-circuited. The theory behind this method is based on the concept that a wave launched at one end, which is totally reflected at the far end, will experience twice the matched-line loss while traversing the cable. Hence, the matched-line loss of the cable will be half the return loss resulting from this measurement.

This method is only accurate if the reference impedance used by the measuring instrument is equal to the complex characteristic impedance of the transmission line. Real-life meters have a real impedance for the reference impedance and that value is usually 50 Ω. It is demonstrated in Note 5 that a more accurate calculation results by making two measurements, one by using an open-circuit and one by using a short-circuit. The average of the two matched-line loss values should be used for A_0. This method is best used with a meter which measures $|\rho|$ or RL because meters that measure SWR are generally not sufficiently accurate for the high SWR values encountered in this measurement.

The following relationships may now be used to convert SWR at one end of a lossy transmission line to the SWR at the other end.

$$|\rho_T| = \frac{SWR_T - 1}{SWR_T + 1} \qquad \text{(Eq 11)}$$

$$SWR_A = \frac{1 + |\rho_T| 10^{\frac{A_0}{10}}}{1 - |\rho_T| 10^{\frac{A_0}{10}}} \qquad \text{(Eq 12)}$$

$$|\rho_A| = \frac{SWR_A - 1}{SWR_A + 1} \qquad \text{(Eq 13)}$$

$$SWR_T = \frac{1 + |\rho_A| 10^{-\frac{A_0}{10}}}{1 - |\rho_A| 10^{-\frac{A_0}{10}}} \qquad \text{(Eq 14)}$$

where $|\rho_T|$ and $|\rho_A|$ are the reflection coefficients at the transmitter end and antenna end, respectively, and

SWR_A = SWR at the antenna

SWR_T = SWR measured at the transmitter end of cable.

The antenna resistance is found by measuring the SWR at the transmitter end at resonance, applying Equations 11 and 12 to find S_0 (SWR_A at F_0), and then using Equations 5 and 6 to find R_A.

To find the 2:1 SWR bandwidth, BW_2, $|\rho_A| = 1/3$ is substituted in Equation 14 to get

$$SWR_{T_{BW2}} = \frac{3+10^{-\frac{A_0}{10}}}{3-10^{-\frac{A_0}{10}}} \qquad \text{(Eq 15)}$$

Now BW_2 is calculated by subtracting the two frequencies where this SWR value is found.

Appendix 2

Calculating Antenna Tuner SWR Bandwidth

When a computer program such as *TLW* analyzes the performance of an antenna tuner, it first "adjusts" the tuner so that the input SWR is 1:1 for the selected load impedance. This is accomplished with an optimization algorithm. Then the tuner component values are fixed and all the parameters of interest, such as the power loss and the stress on the tuner components are calculated in a straightforward manner. All of these calculations are performed at the designated operating frequency.

To find the 2:1 SWR bandwidth it would appear that the operating frequency would have to be changed up and down to find the frequencies where SWR = 2:1. In principle, this could be accomplished with an optimization algorithm, leaving the element values fixed.

However, we can calculate the SWR bandwidth of an antenna tuner without using an optimization algorithm. The tuner is adjusted so that the input SWR =1:1 ($R_{IN} = 50 + j\,0\ \Omega$). Near the operating frequency, the input impedance, Z_{IN} (f), resembles that of a resonant circuit, much like the series resonant circuit of Fig 2, where the resistor in that circuit has a resistance of 50 Ω. For some antenna tuner topologies, the input impedance looks more like a parallel resonant circuit but the principle is the same.

A T-network antenna tuner will behave like a series resonant circuit, while a pi-network tuner behaves like a parallel resonant circuit. We will assume here that the circuit is more like a series-resonant circuit. We can take advantage of the tuned circuit behavior for frequencies near the operating frequency to make all the necessary calculations without resorting to an optimization routine.

Let $Z_{IN}(f) = R_{IN}(f) + j\,X_{IN}(f)$ be the input impedance to an antenna tuner at the frequency, f, when it is terminated in a load impedance, Z_L (f). After adjustment of the antenna tuner at a center frequency, F_C, $R_{IN}(F_C) \approx R_{REF}$ and $X_{IN}(F_C) \approx 0$, where R_{REF} = the reference resistance, which is usually 50 Ω.

Calculate the input loaded Q, from

$$Q_{IN}(F_C) = \frac{F_C}{2\,R_{IN}(F_C)} \cdot \left. \frac{dX_{IN}(f)}{df} \right|_{f=F_C} \qquad \text{(Eq 16)}$$

Some programs, such as *Mathcad*, have the feature of evaluating the derivative in the above expression directly. Another method for finding the derivative in the expression for $Q_{IN}(F_C)$ is to first calculate $X_{IN}((1 + \Delta)\,F_C)$, where Δ = a small increment << 1. Then,

$$Q_{IN}(F_C) = \frac{X_{IN}((1+\Delta)F_C) - X_{IN}(F_C)}{2\,\Delta\,R_{IN}(F_C)} \qquad \text{(Eq 17)}$$

The appearance of $X_{IN}(F_C)$ in the above equation is shown even though it is intended to be zero. This improves the accuracy of the calculation if the actual value of $X_{IN}(F_C)$ is not zero. For the calculation of the derivative, Z_L (f) should be assumed to be equal to $Z_L(F_C)$, a constant. This is equivalent to an assumption that the principal reason for variation of the input reactance is the antenna-tuner selectivity, which is entirely appropriate when the properties of the antenna tuner are being determined.

Now the SWR bandwidth can be calculated. Usually we are interested in the 2:1 SWR bandwidth or the 1.5:1 SWR bandwidth. As defined earlier,

S_M = the SWR bandwidth limit and

BW_{SM} = the SWR bandwidth when the limit is S_M.

$$BW_{SM} = \frac{F_C}{Q_{IN}(F_C)} \cdot \left(S_M + \frac{1}{S_M} - 2 \right)^{\frac{1}{2}} \qquad \text{(Eq 18)}$$

$$BW_{1.5} = \frac{F_C}{\sqrt{6}\,Q_{IN}(F_C)} \qquad \text{(Eq 19)}$$

$$BW_2 = \frac{F_C}{\sqrt{2}\,Q_{IN}(F_C)} \qquad \text{(Eq 20)}$$

The units of BW_{SM} are the same units as F_C. It is useful to express the SWR bandwidth as a percentage of the center frequency, F_C:

$$\%BW_{SM} = \frac{BW_{SM}}{F_C} \times 100 \qquad \text{(Eq 21)}$$

Once the SWR bandwidth is determined, the frequencies where SWR = S_M may be found. These frequencies, one below the operating frequency and the other above the operating frequency, have a geometric mean equal to the operating frequency. They are given by:

$$F_{LSM} = F_C \sqrt{1 + \left(\frac{BW_{SM}}{2\,F_C} \right)^2} - \frac{BW_{SM}}{2} \qquad \text{(Eq 22)}$$

$$F_{HSM} = \frac{{F_C}^2}{F_{LSM}} \qquad \text{(Eq 23)}$$

The Remarkable "Screwdriver" Mobile Antenna

By Max Bloodworth, KO4TV
69 Blue Water Court
Wendell, NC 27591
ko4tv@juno.com; ko4tv@portbridge.com

In the finest of hamdom's tradition of scrounging, KO4TV describes how he built his version of a "Screwdriver" mobile antenna.

Have you been thinking about going HF mobile, but just can't get used to the idea of making the XYL (or XYM) get out in the rain, sleet or snow to change antenna taps or whip length every time you need to change frequency or bands? Then this is the antenna for you. Imagine QSYing from the bottom of 80 meters to the top of 10 meters, right from the driver's seat. You will enjoy a very high Q antenna that has no taps or external adjustments, and that exhibits an SWR under 1.5:1 on all bands. The Screwdriver type of antenna was the brainchild of Don Johnson, W6AAQ, who developed it after many years of experimenting with mobile antennas. My version has proven itself for several years as a rugged, reliable and neat-looking unit. **Fig 1** is a photo of the completed antenna mounted on my truck.

The Loading Coil

The general concept for the Screwdriver is that of a center-loaded antenna with an adjustable loading coil. This is a very old idea; however, most previous multi-band antennas required multiple coil taps and an adjustable top whip section, as well as an impedance-matching unit at the base.

The fallacy of tapping a coil is well known. If you leave one end of the coil open, you have a miniature Tesla Coil, which can cause corona discharge and arcing. If you short the turns, the Q of the loading coil usually drops drastically. The Screwdriver is remarkable in that it does not have any coil taps and yet it can cover a wide range of frequencies with very high Q.

The secret is in the manner of adjusting the coil. It simply slides up or down into a metal tube (the base section), and makes contact with the top of the tube by means of "finger stock," which is made of spring-like Beryllium Copper. The coil is pushed up or down by an ordinary cordless screwdriver; hence the name, Screwdriver. This turns a section of threaded rod and moves the coil form up or down. The section of coil above the finger stock is the active loading coil, and the part of the coil just below the finger stock simply "disappears" into the base tube and is totally out of the circuit. No taps, no loose ends—just a high-Q coil in the middle of two solid metal tubes. Although this antenna is available ready-made from several commercial sources, making one is well within the capabilities of any ham who is relatively handy with ordinary hand tools, and who has access to either a small lathe or a common 1¼-inch pipe die.

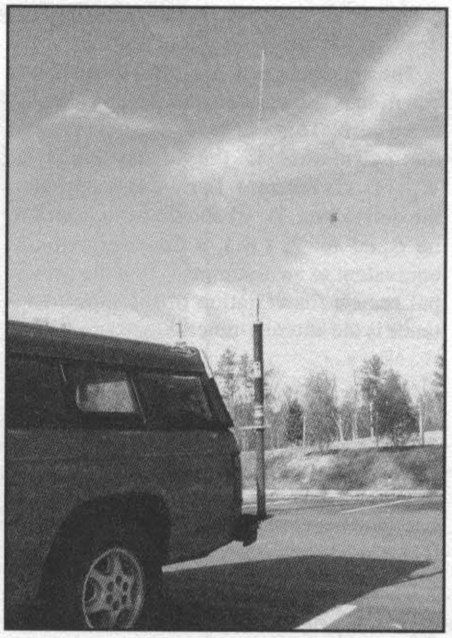

Fig 1—The completed Screwdriver antenna mounted on KO4TV's truck rear bumper. (*Photo courtesy of Gary Pearce, KN4AQ.*)

Constructing Your Screwdriver Antenna

Construction begins by locating a 2-inch inside-diameter tube, about 3 to 3½ feet long. See **Fig 2**. I have used such diverse materials as:

- Aluminum irrigation pipe
- Schedule-20 copper tubing
- A stainless-steel hydraulic cylinder
- A section of aluminum from a 6-meter beam that was damaged by a tornado
- And even a brass bedpost salvaged from the local garbage dump.

The brass bedpost looks especially good on my vehicle, which is Burgundy with gold trim. Whatever material you use for the bottom tube, you can either leave it unfinished or painted to your taste.

The other essential item is a cordless screwdriver, minus its batteries and switch. You can often find one at yard sales or flea

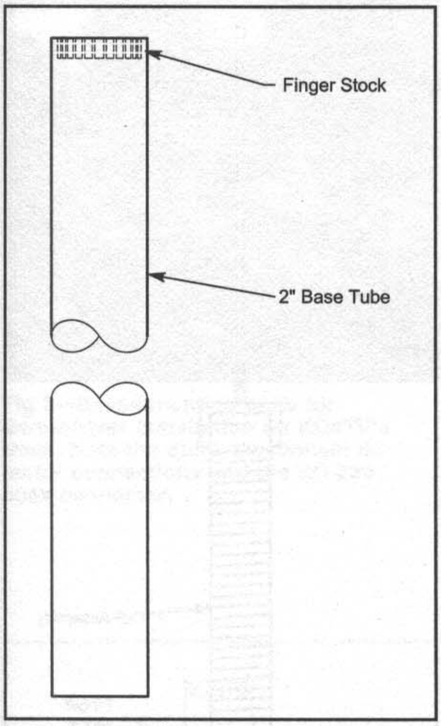

Fig 2—The base tube, with finger stock attached to the top.

markets for a dollar or so, usually with dead batteries, since it is often just as cheap to buy another one new as it is to buy new batteries. So long as it will fit snugly inside the base tube, the brand name is immaterial. I have used Skil, Black & Decker, or even a Wal-Mart $8.00 special, all with equal success. The most difficult part of the job will be making the coil form and winding the loading coil, but with a little patience you should be able to do this satisfactorily.

Bear in mind that it is *not* a "Heathkit" type project, and it will require some innovation and ingenuity on your part. Next, obtain a 2-foot long piece of 1¼-inch PVC pipe (*not* CPVC, which is vulnerable to ultraviolet rays from the sun). With either a lathe or a pipe die, thread approximately 20 inches from one end, at 10 to 12 threads per inch (See **Fig 3**). If you use a pipe die, it helps to loosen the cutters slightly, to make the grooves shallower.

When using a lathe, temporarily insert a piece of 1-inch water pipe inside the coil form to hold it steady in the lathe. The grooves should be just deep enough to comfortably hold the wire in place when it is wound. The choice of coil wire is up to you. I have used 16 or 18-gauge tinned copper, bare copper or my favorite, 17-gauge aluminum electric fence wire. This is available from any farm supply store at a very reasonable cost. It will take about 65 to 70 feet of wire.

Begin by drilling a 1/16-inch hole through the PVC pipe at the bottom end of the threaded portion. Slip the end of the wire through this hole and tie a knot in it to serve as a stop. You could also insert a nut and bolt through a loop in the wire. Then carefully wind the coil to within an inch of the end of the threaded portion. My preferred method of winding is to put a stick or pipe through the holes of the wire reel and hold it between my feet and the floor, to provide the necessary tension to allow tight winding.

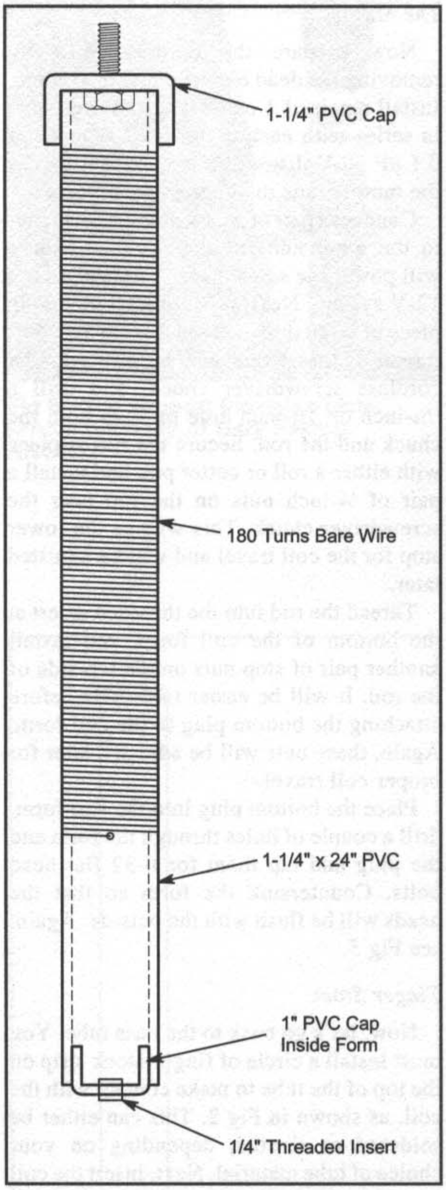

Fig 3—The coil form, with a threaded insert inserted into the bottom PVC cap inside the coil form.

About an inch below the top of the coil, drill a 1/16-inch hole and thread about 6 or 8 inches of wire through it. This will be the top connection from the coil to the whip. The bottom of the coil has no electrical connection.

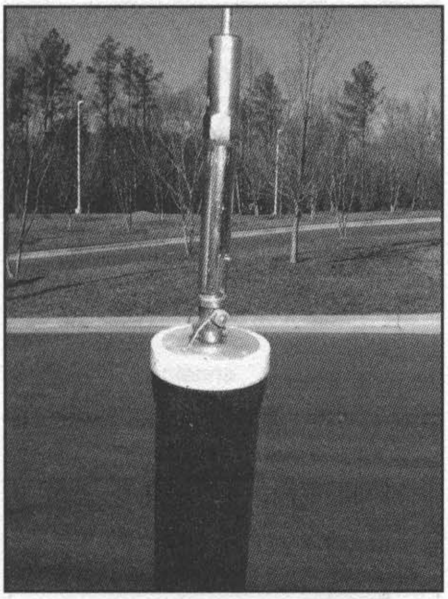

Fig 4—Photo of the top of the loading coil. (*Photo courtesy of Gary Pearce, KN4AQ.*)

The method of attaching the whip to the top of the coil form is up to you. I usually drill a 3/8-inch hole through a 1¼-inch PVC pipe cap and place a 3/8×1 1/2-inch SAE bolt through the hole, with a matching washer and nut on top. The bolt can be drilled and tapped for mounting the whip, which should be about 5 to 6 feet long. (It will be pruned for resonance later.) See **Fig 4**, a photo showing the top of the coil.

A more elegant way of connecting the whip is to obtain a swivel or quick-disconnect antenna fitting from your nearest truck stop. These are widely available for use with CB antennas and are threaded 3/8" SAE. Do not attach the cap to the coil form until after the coil is inserted in the base tube.

Now that you have a coil form and a base tube, the next step will be to plug the bottom of the PVC coil form with a 1-inch PVC pipe cap, which fits snugly inside the coil form. Drill a hole directly in the center of this cap, and install a ¼-20 threaded insert, available at most hardware stores for about 25 or 30 cents. These are commonly used in wooden furniture to provide a thread for attaching bolts to wood. See **Fig 5**.

It is imperative that you install this insert squarely. The best method is to screw a short bolt into it and chuck the bolt in a drill press, placing the pipe cap squarely on the drill press table. Carefully turn the drill chuck by hand until the insert is properly seated.

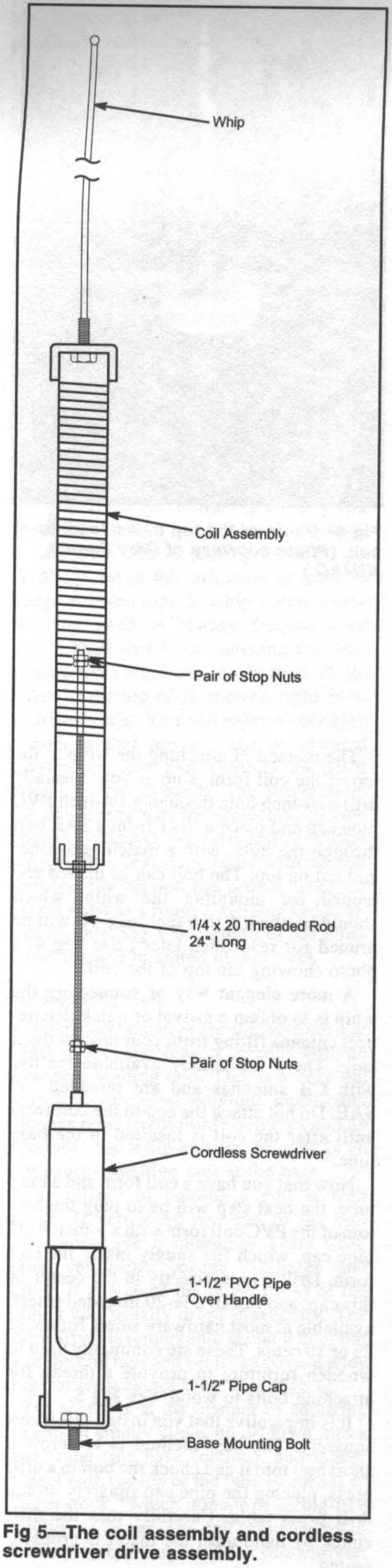

Fig 5—The coil assembly and cordless screwdriver drive assembly.

The Motor

Now prepare the cordless drill by removing the dead batteries and the switch. Install a pair of 1 or 1.5-Ω, 10-W resistors in series with each motor lead. Connect a 0.1 µF 50-V disc ceramic capacitor across the motor leads to suppress motor noise.

Connect a pair of wires, about a foot long, to the other ends of the resistors. These will power the screwdriver from your car's 12-V system. Next, procure a 20-inch long piece of ¼-20 threaded rod (also called "all-thread"). Insert one end of this into the cordless screwdriver chuck, and drill a 1/16-inch or 3/32-inch hole through both the chuck and the rod. Secure the rod in place with either a roll or cotter pin, and install a pair of ¼-inch nuts on the rod near the screwdriver chuck. This will be the lower stop for the coil travel and will be adjusted later.

Thread the rod into the threaded insert at the bottom of the coil form, and install another pair of stop nuts on the top side of the rod. It will be easier to do this before attaching the bottom plug to the coil form. Again, these nuts will be adjusted later for proper coil travel.

Place the bottom plug into the coil form, drill a couple of holes through the form and the plug and tap them for 6-32 flat head bolts. Countersink the form so that the heads will be flush with the outside. Again, see Fig 5.

Finger Stock

Now, let's go back to the base tube. You must install a circle of finger-stock strip on the top of the tube to make contact with the coil, as shown in Fig 2. This can either be soldered or riveted, depending on your choice of tube material. Next, insert the coil and screwdriver assembly through the bottom of the tube, making sure that the coil clears the finger stock without deforming or bending it.

The best method I have found for attaching the screwdriver to the bottom tube is to fit a piece of 1½-inch PVC pipe, about 8 or 10 inches long, over the handle of the screwdriver and attach it with a couple of flat-head 6-32 bolts. You may have to either grind some material off the handle or wrap it with some duct tape to make a snug fit inside the 1½-inch PVC pipe, which should slip snugly into the base tube.

Place a matching 1½-inch PVC pipe cap on the bottom of the pipe, and secure it with a couple of 6-32 screws. Drill a ¼-inch hole through one side of the cap, which will serve to pass the wires from the screwdriver motor. Drill a 3/8-inch hole directly in the center of this cap for the base mount. See **Fig 6**, which is a drawing of the completed antenna assembly.

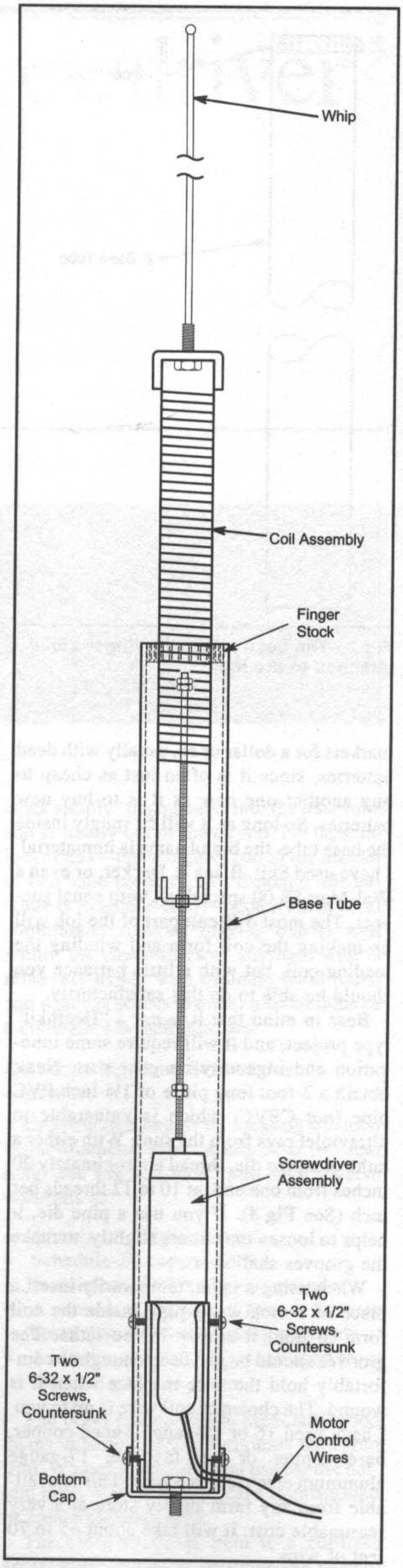

Fig 6—The complete antenna assembly.

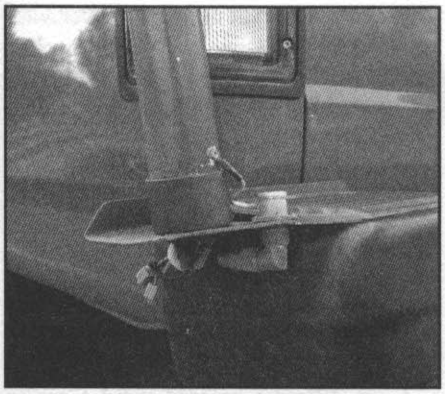

Fig 7—Base-mounting plate for Screwdriver installation on KO4TV's truck. Note the quick-disconnect dc motor connections and the SO-239 coax connector.

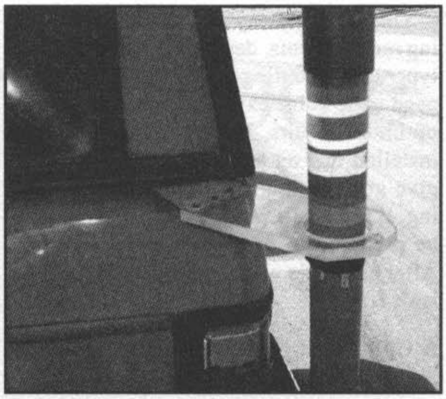

Fig 8—The support Plexiglas plate. (*Photo courtesy of Gary Pearce, KN4AQ.*)

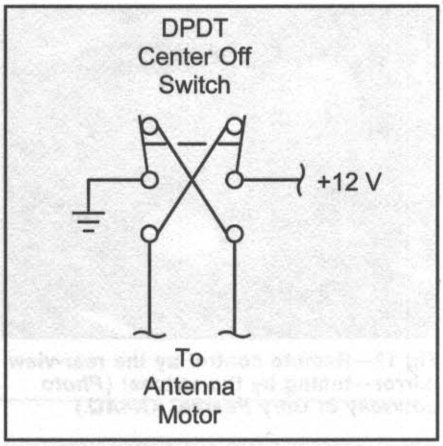

Fig 9—The DPDT center-off spring-loaded switch used to control the screwdriver motor.

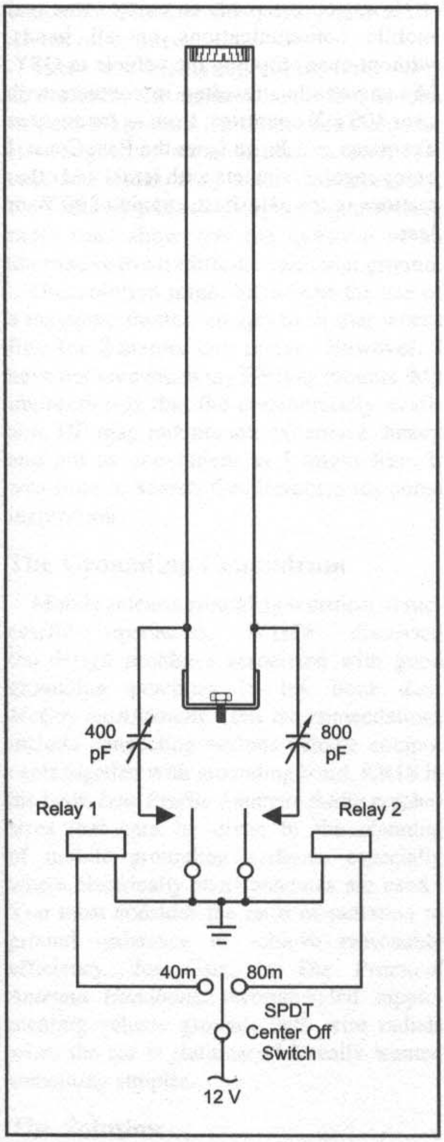

Fig 10—Relay-switched matching capacitors for 40 and 80 meters.

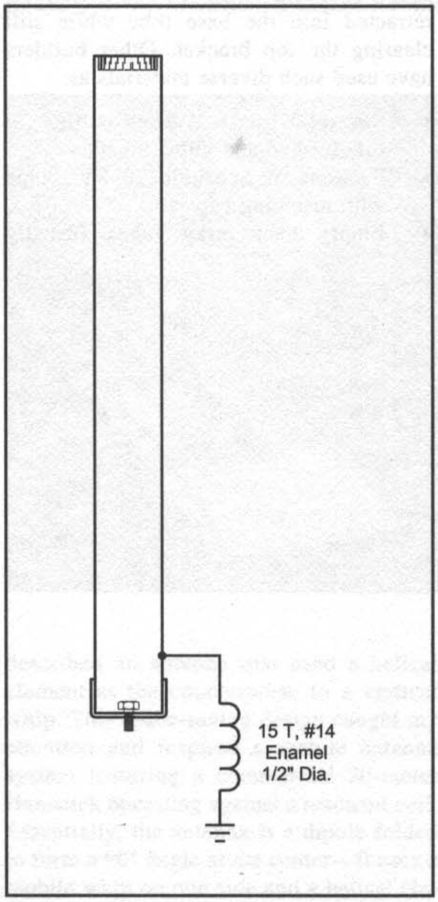

Fig 11—Alternative matching scheme using a single shunt matching coil.

Mounting the Antenna

At this point you must determine exactly how you wish to mount the antenna on your vehicle. You could fasten it to a standard mobile antenna mount, but *do not* use a spring! I prefer to fasten the assembly to a thick metal plate about 6×18 inches in size. I mount this to the frame of the car, protruding about 4 or 5 inches from the lower car body, just behind the rear wheel. You could also fasten such a plate to the lower fender sheet metal with large sheet-metal screws. The SO-239 connector is mounted to this plate also. See **Fig 7**.

An upper bracket, made from Plexiglas or similar insulating material, can be mounted from the trunk lip with an L-angle and used to support the top of the lower tube. See **Fig 8**. With a Plexiglas bracket about 4-inches wide, a 2-inch hole can be drilled in it to pass the tube. This will make a snug and rigid fit at the top. Under no circumstances use a metal band around the tube, as this will form a shorted turn and drastically lower the antenna Q.

With a little care, this type of mounting will leave no visible holes in the vehicle, which will likely enhance its trade-in value. If you mount the antenna on a pickup truck, which is the vehicle of choice in my neck of the woods, it can be mounted directly on the rear safety bumper with a 1½ inch pipe floor flange and matching adaptor on the bottom of the tube.

Electrical Connections

After mounting the base, your next job is to connect the wires from the screwdriver to a DPDT, spring-return center-off switch, mounted in a convenient location in your car. See the schematic in **Fig 9**. Connect the coax from the radio to the base tube, with the center conductor going to the base tube and the shield connected to ground at the base of the antenna.

If you like, you could install a simple base-matching network to give a perfect match on the lower bands. Even with no matching unit, SWR is usually under 2:1 on

Fig 12—Remote control by the rear-view mirror—tuning by the stripes! (*Photo courtesy of Gary Pearce, KN4AQ.*)

all bands. See **Fig 10**. One matching network consists of a couple of trimmer capacitors switched from the bottom of the base tube to ground using a pair of small relays. For 80 meters, approximately 800 pF is required, and for 40 meters about 400 pF. No matching is required for 30 meters or higher.

An alternative matching method is to install a 15-turn coil made from #14 enamel wire, about ½ inch diameter, from the base to ground. See **Fig 11**. In either case, adjust the whip length for proper resonance at both ends of the HF spectrum over the range of movement of your coil.

This antenna may have different matching requirements, depending on the vehicle type and mounting location, so you may need to do some experimentation to obtain optimum results. However, I have never installed one on any vehicle that failed to give good results with just a little tweaking. If it doesn't work exactly right at first, be prepared to do a little experimenting. After all, that's what ham radio is all about, isn't it?

A Coil Cover

Most builders will want to provide a coil cover, both for protection and appearance. My favorite cover is made from a plastic mailing tube, about 24 to 30 inches long and about 2.5 inches in diameter. You can find these at an office supply store. They have a screw-on cap on one end, which can be mounted to the top of the loading coil.

You trim the bottom of the cover to the proper length to allow the coil to be fully retracted into the base tube while still clearing the top bracket. Other builders have used such diverse materials as:

- Several 1-liter soft drink bottles cut off, swaged and glued together
- Sections of Schedule 20 PVC pipe with matching cap
- Empty beef jerky tubes (usually available for the asking at convenience stores)
- Wands from a shop vacuum cleaner, fitted with the cap from an aerosol spray can.

Just let your imagination run wild and you may be surprised at your own ingenuity. Whatever material you do use, I suggest that you paint it to match your vehicle. Just be sure to use non-metallic paint.

Tuning by the Stripes

I use different colored vinyl tapes to mark the tuning points for the amateur bands along the tuning coil. The lower edge of the supporting Plexiglas middle support acts as a pointer, which I can spot from my rear-view mirror. See **Fig 12**. This may be a low-tech tuning method, but it works!

The Proof is in the Pudding

Now, you are ready to enjoy some real mobile communications on all bands, without even stopping the vehicle to QSY. My antenna has resulted in contacts with over 100 DX countries, from as far away as Tasmania and Japan from the East Coast. I enjoy regular contacts with Israel and other stations in the Mid-East, running 100 W or less.

The Rolling Dipole

By Thomas M. Hart, AD1B
54 Hermaine Ave.
Dedham, Ma. 02026
e-mail: **vze2cjtp@verizon.net**

AD1B describes his roof-rack HF mobile antenna system, featuring no electrical connections to the vehicle.

On occasion I enjoy packing my MFJ 20-meter QRP rig, along with a gel cell battery, for some mobile operating. The episodic nature of these jaunts really doesn't justify a permanent HF antenna system on my car. Instead, I have found that I need something that can be attached and removed quickly and easily whenever needed.

There are plenty of commercial whip antennas for the amateur bands that use the vehicle as a ground. The Hamstick whips for HF caught my attention due to their low cost and widespread use.[1] Unfortunately, the stumbling block delaying my traveling radio road show was the question of an alternative to a traditional vehicular ground.

One solution might have been the use of a magnetic mount, an approach that works fine for 2 meters and above. However, I have not seen too many HF mag mounts. My impression is that the commercially available HF mag mounts are expensive, heavy and not as convenient as I might like. It was time to search the literature for some inspiration.

The Grounding Conundrum

Mobile antenna grounding is critical to successful operations. W1ICP discussed the design problems associated with good grounding practices in his book *Lew McCoy on Antennas*.[2] His recommendations include connecting various vehicle components together with grounding braid. KR1S in his book *Low Profile Amateur Radio* emphasizes that care be given to the planning of mobile grounding systems, especially where electrically short antennas are used.[3] You must consider the ratio of radiation to ground resistance to achieve reasonable efficiency. Joe Carr, in *The Practical Antenna Handbook*, recommended supplementing vehicle grounds with wire radials when the car is stationary.[4] I really wanted something simpler.

The Solution

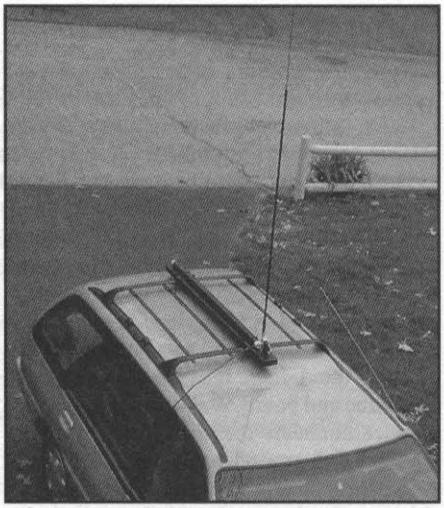

A very interesting antenna design appeared in *73 Magazine* by KA8OGD.[5] He described an antenna that used a helical element as the counterpoise to a vertical whip. This space-saving design caught my attention and inspired a mobile antenna system featuring a commercial 20-meter Hamstick operating against a resonant coil. Essentially, the antenna is a dipole folded to form a 90° angle at the center—It uses a mobile whip on one side and a helical element on the other. The entire contraption is mounted on a length of 2 × 4 that ties to the car roof racks with UV-resistant nylon rope. The installation and removal processes require little more than tying or removing four square knots. See the photograph in **Fig 1**.

There have been a number of examples of dipole antennas being installed on cars. For example, Ed Tilton published a design for a 6-meter horizontal dipole mounted 30 inches above the trunk of a vehicle.[6] Clearly, my design breaks no new ground in the mobile dipole arena.

Further, over the years hams have come up with any number of imaginative antennas using short whips designs, ranging from a window-mounted HF whips to HF antennas designed around linear-loading techniques.

I have had good luck with both HF and VHF antennas using radials that are isolated from ground, a similar design to the rolling dipole. My 2-meter mobile antenna is an on-glass top-loaded "Tee" with a single horizontal radial.[7] For the 160-meter band, I use my G5RV antenna as a top-loaded vertical that operates against two 165-foot, on-ground radials.[8] The latter has served well during Topband winter contests, when they often sit on snow banks. The antenna system runs quite well even with my SGC 2020 operating QRP, at 5 W CW.

The Counterpoise Coil

The design of the counterpoise coil was made easy by use of a great DOS utility program from K6MLO, called *COIL.EXE*.[9] The program runs very nicely under Windows 95, 98, Windows NT and in a DOS window. I have not tested it under Windows 2000 or Windows XP, but it should work. It is particularly good to find the self-resonant frequency of a coil and its distributed capacitance.

I designed a coil that is 40 inches long and $1^{1}/_{8}$ inches in diameter, using a wire size of #18 insulated wire. Using *COIL.EXE*, I generated parameters for a coil that is self-resonant at the bottom of the 20-meter band. This used 30 feet of #18 insulated wire, making 72 turns on the PVC coil form. Note that this is close to a half wavelength on 20 meters.

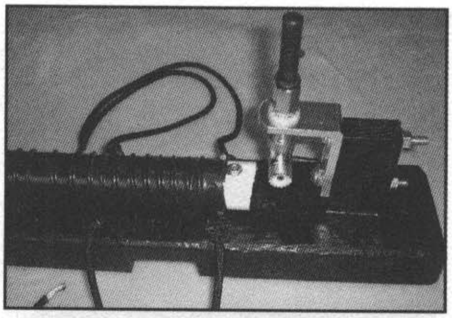

Fig 1—Close-up photo of coil and feed-point assembly with quick-disconnect for whip.

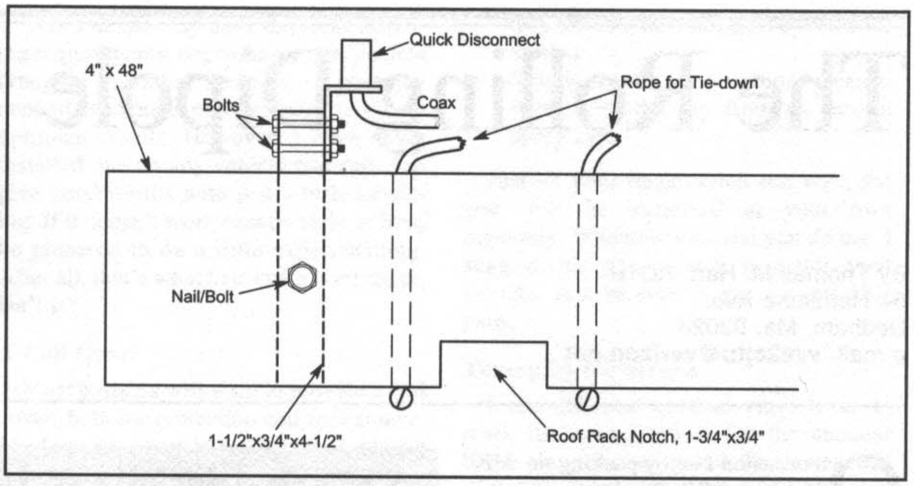

Fig 2—Construction details.

Using the helical element as a counterpoise solved the key part of my design problem. I use an antenna tuner to load all of my antennas—an especially useful practice in this case since the coax will not find a 50-Ω load at the point of antenna attachment because the whole antenna system is electrically short.

Radiation-Pattern Considerations

I wondered about what antenna pattern would result from my unusual mobile antenna. My concern for the rolling dipole was that the pattern might be highly asymmetrical, even when I optimally located it in the center of the car's roof. Various sources discussed the issue of mobile antenna placement. For both HF and VHF, the center of the roof is considered the best place for omnidirectional coverage, with the next best location being the trunk lid. The rear bumper is the least desirable spot.

Not having access to lab equipment that can measure the radiation pattern of the antenna, I decided to model the pattern using *EZNEC* software.[10] The Hamstick is 93 inches long while the counterpoise coil is 40 inches long and has an inductance of 930.44 µH. I placed a load at the center of each *EZNEC* wire and the source at the intersection. Finally, since the metallic car body seems to meet the description of a good ground, I placed the antenna 6 inches above such a good ground. Interestingly enough, the antenna pattern is fairly symmetrical. The lobe favors the direction of the coil only slightly. My field results provide anecdotal evidence that the pattern predicted by *EZNEC* is correct and I have not noticed any favored direction in either receive or transmit.

Measure Twice—Cut Once

The actual construction of the antenna was fairly simple. See **Fig 2** for construction details. I cut a 48-inch length of 2 × 4 to support the whole antenna. A length of oak 1.5 × 0.75 × 5 inches goes through a rectangular hole at the front of the base and serves as the attachment point for the Hamstick. I purchased the Hamstick sidemount adapter and a quick-release unit. These are held in place with two bolts. The Hamstick part numbers used were:

20-Meter Hamstick	model # 9120
Sidemount	model # 274
Quick Disconnect	model # 009HD

Refer to the manufacturer's web site or catalog for other options.

The 2 × 4 has two channels cut in the bottom that fit over the roof racks and prevent front-to-back movement. On each side of the board, two holes hold nylon ropes used to tie the antenna to the roof racks. See Fig 1 again.

My coil is secured by two bolts that pass through the 1-inch ID (1.3125-inch OD) PVC tube and board. A short piece of hook-up-wire connects the coil/counterpoise to the Hamstick ground point. The coil form is 42 inches long, allowing one inch at either end of the 40-inch long coil for mounting purposes.

I simplified coil winding by placing pencil marks every inch along the length of the PVC tube. This helped keep track of the even placement of turns of insulated wire along the length of the form. When finished, I wrapped the coil with black electrical tape to hold things in place. The end result is a rigid and rugged unit that has demonstrated no problems at highway speeds.

Conclusion

I've used my mobile HF antenna system for a year and it has done surprisingly well. I have had numerous casual contacts, but have especially enjoyed trying to work the gang on the 14.336-MHz County Hunter net.

My final antenna design represents many compromises, but provides some interesting opportunities for future enhancements as well. The tuner makes loading simple despite the inherent mismatch. The antenna does not require any electrical connections to the vehicle and can be moved from one car to another very easily. The system may also be used as a portable antenna, with or without a car under it. Set it up on a tree stump, table or balcony and you have a perfectly useful temporary antenna.

Anyone interested in improving the system might consider designing a matching network at the coax attachment point that would provide a direct 50-Ω load. Another possibility might be to design a multi-coil system that could improve the symmetry of the signal pattern, while reducing ground losses to some extent. Perhaps a larger coil diameter could be used to reduce the length of the PVC coil form. There is a lot of potential for experimentation and improvement with this basic design starting point.

REFERENCES AND NOTES

[1] Lakewood Antennas, 3620-9A Whitehall Rd, Anderson, SC 29626. Tele (864) 226-6990. **http://www.hamstick.com/**.

[2] Lew McCoy, W1ICP, *Lew McCoy on Antennas* (Hicksville, NY: CQ Communications, Inc, 1994).

[3] Jim Kearman, KR1S, *Low Profile Amateur Radio* (Newington: ARRL, 1993).

[4] Joseph Carr, *The Practical Antenna Handbook* (Blue Ridge Summit, PA: TAB Books, 1989).

[5] David Younker, KA8OGD, "The SFA on 15 Meters," *73 Magazine*, Jun 1990, p 57.

[6] Edward P. Tilton, W1HDQ, ed., *Radio Amateur's VHF Manual* (Newington: ARRL, 1972).

[7] Thomas M. Hart, AD1B, "T for Two," *CQ Magazine*, Jun 1997.

[8] Thomas M. Hart, AD1B, "The 160-RV Antenna", *CQ Magazine*, Aug 1995. "T for Topband," *CQ Magazine*, May 1998.

[9] Harold Wood, K6MLO, *COIL.EXE*, 212 N Pasqual Ave, San Gabriel, CA 91775-2734. **http://www.qsl.net/k6mlo/**.

[10] *EZNEC* Ver 3.0, Roy Lewallen, W7EL, PO Box 6658, Beaverton, OR 97007. **http://www.eznec.com/**.

One Antenna for HF and VHF Mobile Operation

By Joseph A. Huie, K2PEY
1910 S 30th St.
Quincy, IL 62301
e-mail: **JoeHu@aol.com**

K2PEY tells you how to make a mobile antenna that can cover 40 to 10 meters, plus 6 and 2 meters.

Background

After years of VHF mobile operation, I wanted to add HF capability so that I could enjoy some long-distance contacts while driving from Illinois to New York and back during the summer months each year. The timing was right, due to the ready availability of compact, high performance, multiband transceivers and the occasion of a vehicle trade-in. The transceiver selection was easy—I followed the experience of a friend. The antenna decision was quite a bit more difficult.

With a new vehicle, I would be faced with not only the transceiver installation, but also gaining access to the roof of the vehicle for mounting at least two antennas, for GPS and ham radio. The GPS antenna would go on the luggage rack toward the rear of the vehicle, as I had done previously. This would need a sealed through-the-roof BNC connection. On previous vehicles, I had mounted the VHF 2-meter antenna in the center of the roof, about 20 inches back from the windshield. I wanted to do the same on my new car.

The normal approach to HF operation would be to choose an eight-foot loaded whip and mount it somewhere on the rear of the vehicle. My wife already objected to the two extra antennas and was not going to approve a third antenna swinging from the rear.

ICOM and Yaesu manage to squeeze HF, VHF and UHF into one tiny package. Why couldn't I make an attempt doing the same with one antenna? I developed a plan to install a $^{5}/_{8}$-wavelength 2-meter whip on the vehicle roof and then design quick-connect base matching networks for 6 meters and for the lower bands.

This would mean a four-foot whip as the radiating element for all of the bands. This would essentially rule out 75 meters, but maybe not 40 meters. Bandwidth would be narrow and efficiency would be limited, especially on the lower frequencies. Friends warned that these compromises might be too much.

On the positive side, there is a clear shot in all directions from the top of a vehicle and the radiation resistance would, at least, be close to the theoretical value, rather than being reduced by the proximity of the vehicle body for a bumper-mounted whip. Plus my wife had already accepted a four-foot 2-meter whip. The decision was made.

This article covers the design and testing of the matching networks. Overall results were better than expected, including a surprise on 6 meters.

The 2-Meter $^{5}/_{8}$ Wavelength Whip

The $^{5}/_{8}$-wave whip is quite popular at VHF because this length theoretically provides maximum field strength at low elevation angles. For a given power input, the signal is 3 dB better than a ¼ wave whip. This low elevation angle gain is, of course, obtained with a sacrifice in radiated power at higher angles. Simple theory gives a length of 50.5 inches at 146 MHz. In practice it is usually a little shorter.

The input impedance of a $^{5}/_{8}$-wave whip is relatively high, with a large capacitive reactance component, so a matching network must be built into the antenna. Two popular approaches to the matching problem are shown in **Fig 1A** and 1B.

I had to reject Network A because of the shunt inductance to ground, something that is difficult to implement with a quick-connect system. Network B was ideal because it uses a series inductance to cancel the capacitive reactance of the antenna and it can help provide impedance transformation in the HF bands.

My previous mobile 2-meter VHF installation used a NMO, "Motorola" style mount. The NMO mount takes a ¾-inch hole in the roof and is mechanically strong, so it continued to be my choice. For the basic antenna I purchased a Radiall/Larsen $^{5}/_{8}$-wave whip and base combination, model

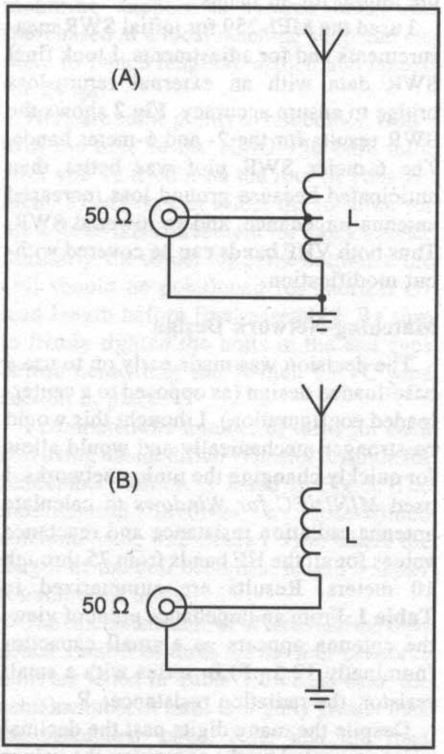

Fig 1—2 meter 5/8-wavelength antenna matching.

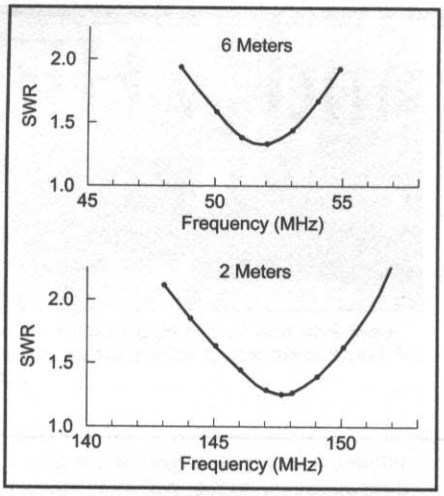

Fig 2—Measured SWR on 6 and 2 Meters, 48.375-inch whip with NMO 150 base and 11.5 feet RG-58A.

Table 1
Calculated Whip Impedances for the HF Bands (48.375 Inches long, 0.1-Inch Diameter)

Frequency *MHz*	*Resistance* *Ω*	*Reactance* *Ω*	*Impedance* *Ω*	*Phase* *Degrees*	*VSWR*
3.950	0.09507585	−3373.364	3373.364	270.00	2.24E+06
4.000	0.09750326	−3330.902	3330.902	270.00	2.24E+06
7.250	0.3219061	−1822.147	1822.147	270.01	2.06E+05
7.300	0.3263926	−1809.372	1809.372	270.01	2.01E+05
10.100	0.6289427	−1292.769	1292.77	270.03	5.33E+04
10.150	0.6352731	−1286.089	1286.089	270.03	5.22E+04
14.250	1.269356	−894.0447	894.0456	270.08	1.27E+04
14.300	1.278540	−890.6129	890-.6138	270.08	1.25E+04
14.350	1.287736	−887.1915	887.1924	270.08	1.23E+04
18.090	2.080939	−682.4618	682.465	270.17	4.51E+03
18.140	2.092982	−680.2564	680.2596	270.18	4.45E+03
21.200	2.906770	−563.775	563.7825	270.30	2.21E+03
21.300	2.935998	−560.4819	560.4896	270.30	2.16E+03
21.400	2.965377	−557.2177	557.2255	270.30	2.12E+03
24.910	4.110506	−457.3024	457.3209	270.51	1.03E+03
24.960	4.128503	−456.0547	456.0733	270.52	1.02E+03
28.000	5.315387	−387.3122	387.3487	270.79	574.0
28.500	5.529187	−377.1607	377.2012	270.84	524.0
29.000	5.748455	−367.2937	367.3387	270.90	479.0

NMO 150B. Certainly another brand or a homebrew design could be used as well.

For the NMO 150B, the inductance of the base measured 0.3 µH, with approximate coil parameters of 4.5 turns, 0.7-inch diameter and 0.5-inch length. After installation of the NMO roof mount and the NMO 150 base, I cut the whip to length for a nominal 2-meter center frequency of 147 MHz using an MFJ-259 SWR Analyzer. The total length, including the threaded metal support cone, was 48.375 inches. You must do this carefully, because once set all the HF bands will be adjusted using that length. Any later change of whip length would shift the tuning for all bands.

I used the MFJ-259 for initial SWR measurements and for adjustments. I took final SWR data with an external return-loss bridge to ensure accuracy. **Fig 2** shows the SWR results for the 2- and 6-meter bands. The 6-meter SWR plot was better than anticipated because ground loss increased antenna impedance, and so lowered SWR. Thus both VHF bands can be covered without modification.

Matching-Network Design

The decision was made early on to use a base-loaded design (as opposed to a center-loaded configuration). I thought this would be stronger mechanically and would allow for quickly changing the tuning networks. I used *MININEC for Windows* to calculate antenna radiation resistance and reactance values for all the HF bands from 75 through 10 meters. Results are summarized in **Table 1**. From an impedance point of view, the antenna appears as a small capacitor (nominally 12.5 pF) in series with a small resistor, the radiation resistance, R_{AR}.

Despite the many digits past the decimal point generated by the computer, the values are approximate due to the assumptions made for the computer model used. First, a perfect, infinite ground plane was assumed rather than the actual vehicle and ground. Second, the antenna diameter is not a constant 0.1 inches, but is tapered. Third, the small base of the antenna and matching network are not included in the model.

Nevertheless, the calculated values are representative and serve as a starting point for the matching-network design. The capacitive reactance values are reasonably close, but the resistance values require two significant adjustments. The matching-network loss resistance and the system ground resistance must be added to the calculated radiation resistance to come up with a total R_T.

Fig 3A shows the basic schematic for the antenna system, including matching network. I then modified the schematic for analysis purposes in Fig 3B, which also shows the design equations. A basic L-network is used to match antenna resistance to the 50-Ω point at the NMO base connection. The main part of the loading coil L2 reactance cancels the antenna series capacitive reactance. The remaining (much smaller) part of the overall L2 reactance provides impedance transformation in conjunction with C1.

It would have been desirable to include the 2-meter matching coil L1 as part of L2, but the NMO base connection point is not easy to reach and I did not attempt to do so. Rather, the 0.3 µH L1 forms part of an L-network transforming 50 Ω to a higher intermediate resistance, R_P.

The big unknowns in the process are the loading-coil loss resistance and the ground loss. A starting point for the loading coil was to assume a Q of 150, and then refine it by actually measuring the coil resistance at the operating frequency after the coil was built.

Ground loss resistance is more difficult. I had to make measurements directly at the antenna when it had been installed on the vehicle. **Fig 4** shows the technique used to measure the coil resistance, R_{L2}, and the total antenna/coil resistance, R_T (ground resistance being a calculated value, $R_G = R_T - R_{L2} - R_{AR}$). The resistance measurements and calculations are summarized in **Table 2**. Included there are calculated efficiencies for the antenna system and the number of S-units (based on 6 dB per S-unit) a received signal would be down compared to a similar antenna with 100% efficiency.

With the measured values of R_T and the equations listed in Fig 3, you can calculate the values for the shunt capacitor, C1, and

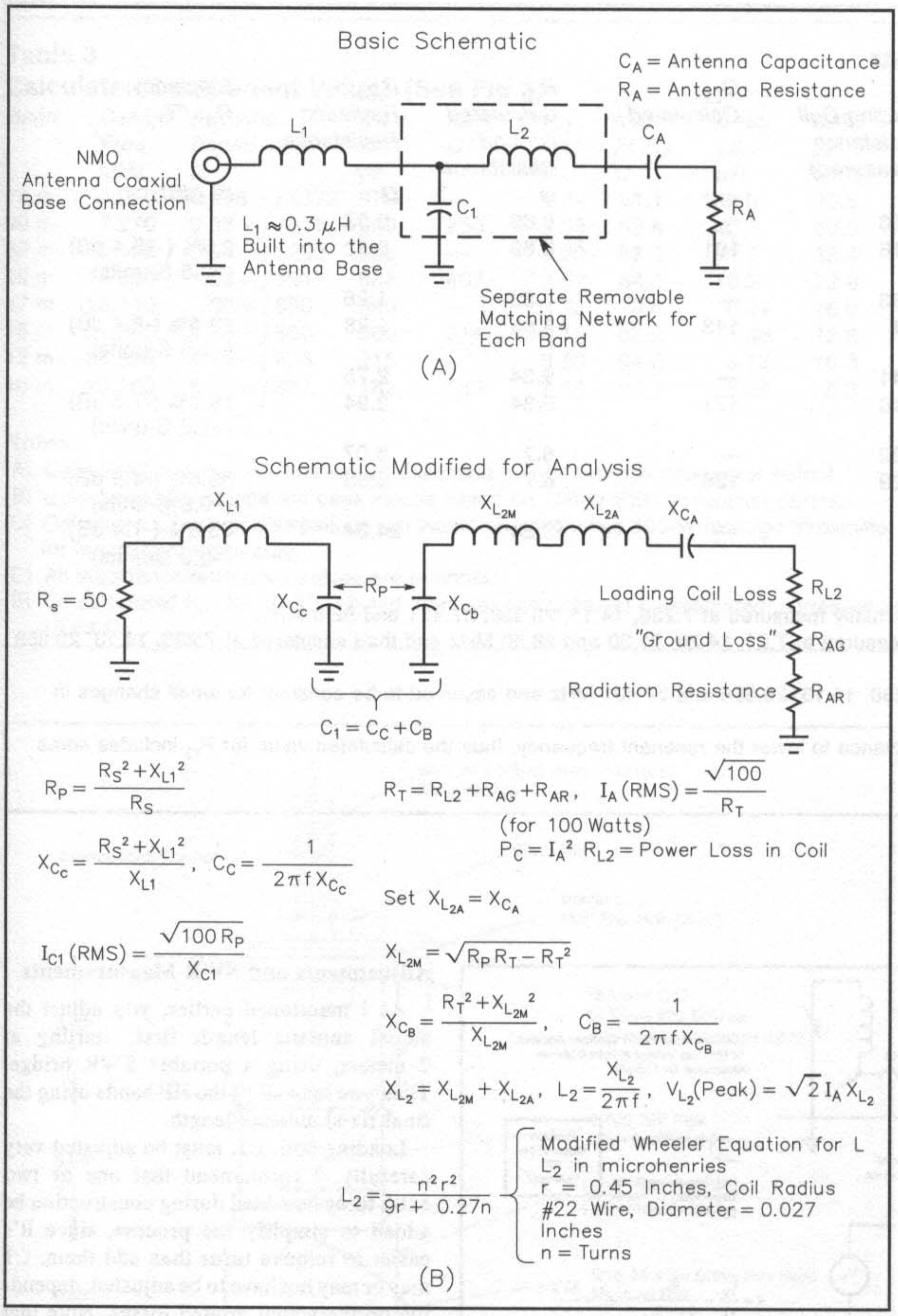

Fig 3—HF band matching network: at A, basic schematic, and at B, schematic modified for analysis.

the base-loading coil, L2. **Table 3** shows the values calculated for all bands from 75 to 10 meters. Important currents, voltage and power dissipation are listed for each band.

I built networks for the 40, 20, 15 and 10-meter bands and I included actual values for C1 and L2 (turns) in Table 3. I chose the final values for C1 experimentally, based on the lowest SWR, starting first with the calculated value. Notice that in each case the experimental value is less. The primary reason for this is the lead inductance of the capacitor, which effectively magnifies the value of the capacitor.

Substantial RF current flows through C1, so you should choose one with low loss and temperature stability. I used silvered-mica capacitors, which generally have a Q in excess of 1000 and a voltage rating of 300 or 500 volts. Dipped silvered-mica capacitors are available from distributors such Mouser and Jameco. You might have to achieve the required values from series/parallel combinations. This is what I did in some cases. The exact value is not extremely critical since the tuning is relatively broad at this point in the circuit. For example, at 14.3 MHz the calculated value for a 1:1 SWR is 508 pF, but a value of 531 pF or 485 pF would give a 1.1:1 SWR with a center frequency shift of only 5 kHz, not much of a change.

Loading Coils and Mechanical Construction

I wound the loading coils for each band on CPVC nominal ¾-inch pipe using #22 enamel wire. I cemented caps to the ends of the pipe for mounting with brass hardware. Construction details are illustrated in **Fig 5** and also shown in the photograph in **Fig 6**.

I made one modification to the NMO 150 base. To secure a ground connection for C1, I drilled a hole in the base and tapped for a 4-40 brass screw, as Fig 5 shows. A ground lug soldered to C1 slips under the screw to make the connection. It is important for quick-disconnect reasons to have the lug cut open at the end.

The NMO 150 base has a 5/16-inch, 24 threads per inch stud for connecting the whip antenna. Thus all hardware must have a 5/16-24 NF thread. Most hardware stores, if they have brass at all, stock hardware with the 5/16-18 NC thread. So this becomes an issue.

I was able to find brass nuts at Home Depot labeled 5/16-18, which were actually 5/16-24—I bought all they had. I had no such luck for the bolts. I bought 3-inch hex-head brass machine bolts, which were partially threaded. I cut off the 18 tpi threaded ends and threaded the remainder for 24 tpi. The mounting support is ½-inch brass rod (purchased at a local machine shop and cut there in 1-inch lengths), drilled and tapped for 24 tpi.

Here are some points to remember. Don't drill the hole in the NMO 150 base until after you've tried it on the roof of your vehicle. Then you can select the location for the hole so it is convenient for quick access. Similarly, the solder lug at the bottom of the coil should be positioned for shortest C1 lead length before final assembly. Be sure to firmly tighten the bolts in the end caps before cementing the ¾-inch CPVC pipe section in place.

I computed the number of turns for each coil using the modified Wheeler formula for inductance, which is listed in Fig 3. The modification involves a close-wound solenoid using #22 enamel wire, where the length of the coil becomes: length = 0.027 × number of turns.

The calculated number of turns and the final actual number of turns for the four networks built are listed in Table 3. In each case, the actual number of turns is slightly greater than the calculated value. Note that the final inductance adjustment is very critical, as will be discussed in the next section.

Table 2
Results of Resistance Measurements

Band	Frequency MHz	R_T Total Resistance (Measured) Ω	R_{L2} Loading Coil Resistance (Measured) Ω	Q_{L2} Calculated	R_G Calculated Ground Resistance Ω	R_{AR} Radiation Resistance Ω	Efficiency R_{AR}/R_T % (dB)
40 m	7.238	11.17	10.16	—	0.69	0.32	—
	7.270	11.19	10.18	181	0.69	0.32	2.9% (−15.4 dB) (−2.6 S-units)
20 m	14.130	9.44	6.36	—	1.83	1.25	—
	14.300	9.51	6.4	143	1.83	1.28	13.5% (−8.7 dB) (−1.5 S-units)
15 m	20.658	15.5	3.41	—	9.34	2.75	—
	21.300	15.74	3.46	171	9.34	2.94	18.7% (−7.3 dB) (−1.2 S-units)
10 m	27.421	15.0	3.23	—	6.7	5.07	—
	28.500	15.52	3.29	126	6.7	5.53	35.6% (−4.5 dB) (−0.8 S-units)
6 m	52.000	37.88	—	—	13.24	24.64	65.0% (−1.9 dB) (−0.3 S-units)

Notes:

(A) Total Antenna/Network Resistance (R_T) actually measured at 7.238, 14.13, 20.658, 27.421 and 52.0 MHz.

(B) Loading Coil Resistance (R_{L2}) actually measured at 7.27, 14.30, 21.30 and 28.50 MHz and then estimated at 7.238, 14.13, 20.658 27.421 MHz.

(C) Ground Resistance (R_G) calculated at 7.238, 14.13, 20.658 and 27.421 MHz and assumed to be constant for small changes in frequency.

(D) R_T at 52 MHz measured with series inductance to lower the resonant frequency, thus the calculated value for R_G includes some inductance loss.

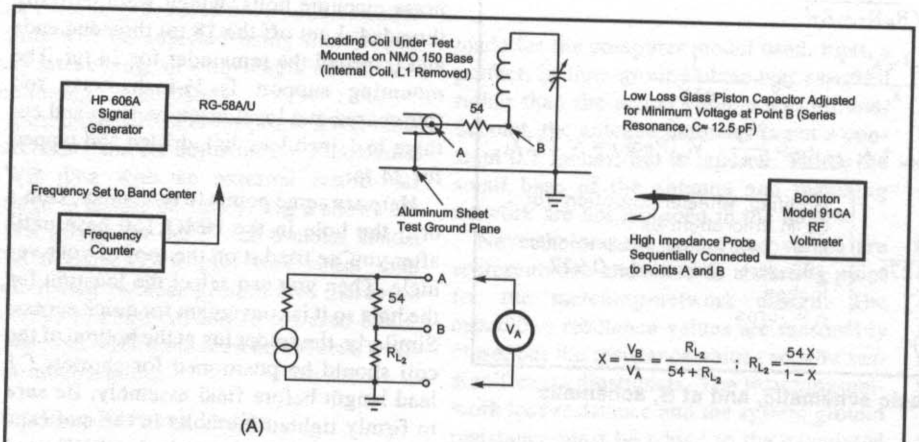

Fig 4—Loss-resistance measurements: at A, loading-coil resistance, and at B, total antenna resistance.

Adjustments and SWR Measurements

As I mentioned earlier, you adjust the actual antenna length first, starting at 2 meters, using a portable SWR bridge. Then you tune all of the HF bands using the final fixed antenna length.

Loading coil, L2, must be adjusted very carefully. I recommend that one or two extra turns be added during construction be added to simplify the process, since it's easier to remove turns than add them. C1 may or may not have to be adjusted, depending on the actual ground losses. Note that the calculated RF voltage gradient across the coil is moderately high, up to nearly 175 V per turn. You must wind each coil as a single-layer solenoid without overlapping the turns.

You adjust L2 by removing turns and by spreading the turns on the form to bring the minimum SWR frequency to the desired point in the band. C1 basically determines the minimum SWR and has a relatively small effect on center frequency. Start with the value actually used, as shown in Table 3. Have enough different silvered-mica capacitors available to make small changes, achieving a near 1.0 to 1 SWR at the center frequency.

Since you make the coil adjustment by spreading turns, use a small piece of tape to

Table 3
Calculated Component Values (See Fig 3)

Band	*Design Freq. MHz*	*Antenna Impedance Ω*	*Calc. C1 pF*	*Actual C1 pF*	*I_{C1} rms A*	*Mid Pt R_P Ω*	*Calc. L2 µH*	*Calc. L2 turns*	*Actual L2 turns*	*V_{L2} Peak V*	*Coil Diss. W*	*Ant. I_A A*
75 m	3.950	$0.095 - j3373$	979	—	1.74	51.1	136.9	196.5	—	9960	—	2.07
40 m	7.270	$0.32 - j1817$	906	750	3.03	53.8	40.3	66.0	69	7774	91	2.99
30 m	10.100	$0.63 - j1293$	686	—	3.29	57.2	20.7	38.4	—	5739	—	3.09
20 m	14.300	$1.28 - j891$	508	407	3.67	64.5	10.2	22.6	25	4189	67	3.24
17 m	18.140	$2.09 - j680$	340	—	3.32	73.4	6.21	16.0	—	2786	—	2.78
15 m	21.300	$2.94 - j560$	260	214	3.15	82.2	4.43	12.8	15	2113	22	2.52
12 m	24.960	$4.13 - j456$	215	—	3.28	94.3	3.13	10.3	—	1756	—	2.53
10 m	28.500	$5.53 - j377$	182	149	3.38	107.7	2.36	8.6	9	1489	21	2.54

Notes:

(A) Calculated currents are rms values assuming 100-W average transmitter output.

(B) Calculated L2 voltages are peak values based on 100-W PEP transmitter output.

(C) Calculated L2 power dissipations are based on continuous 100-W average transmitter output. Dissipation will be substantially less for intermittent voice duty.

(D) All impedance/resistance values are in ohms.

(E) C1 calculated for the 75, 30, 17 and 12-meter bands based on estimated, corresponding values for R_T: 23.3, 10.5, 12.92 and 15.63 Ω.

hold the turns in position before applying clear silicon rubber sealant. A small center frequency shift must be anticipated as you apply the sealant and it hardens overnight. On 40 meters, expect a shift of –15 kHz; on 20 meters, –105 kHz; on 15 meters, –100 kHz; and on 10 meters, a negligible shift. After sealing, each network is very rugged and stable. **Fig 7** shows SWR plots. Also see photos in **Fig 8** and **Fig 9**. These show the 40-meter and 15-meter quick-connect assemblies.

Vehicle Installation

Installation of the antenna, cabling and the transceiver is, of course, unique to each model vehicle. However, some comments on my experience relating to a year 2000 Ford Explorer four door XLT may be helpful.

My past practice has been to permanently mount the antenna on the vehicle rather than use a magnetic mount or some other temporary method. Although this is a matter of personal preference, the permanent approach certainly results in a more secure and neater installation.

To gain inside access to the roof of the vehicle, you must partially lower the inside ceiling material, which is held in place by plastic push pins and plastic trim with push pins molded in. Exercise great care prying the pins out to avoid breakage. This operation is probably best done in warmer weather.

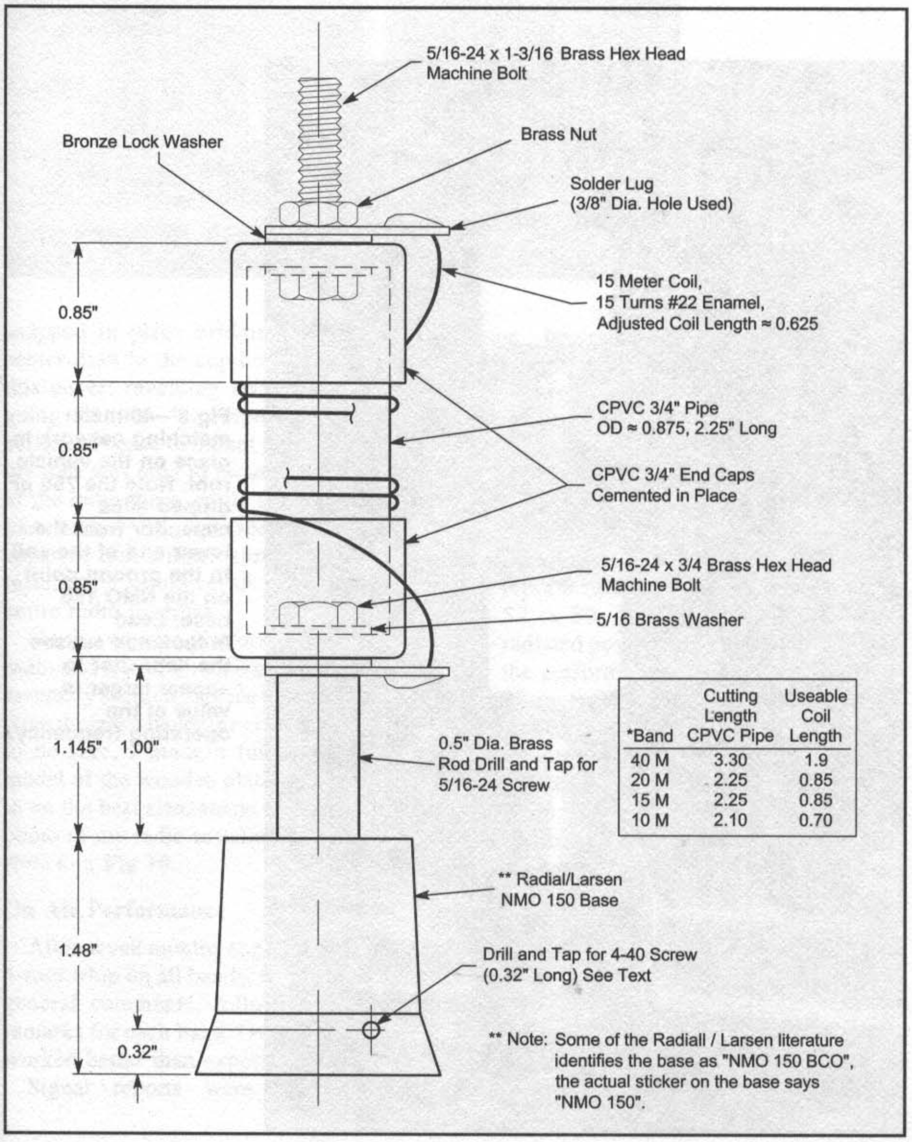

*Band	Cutting Length CPVC Pipe	Useable Coil Length
40 M	3.30	1.9
20 M	2.25	0.85
15 M	2.25	0.85
10 M	2.10	0.70

** Note: Some of the Radiall / Larsen literature identifies the base as "NMO 150 BCO", the actual sticker on the base says "NMO 150".

Fig 5—Loading-coil construction detail.

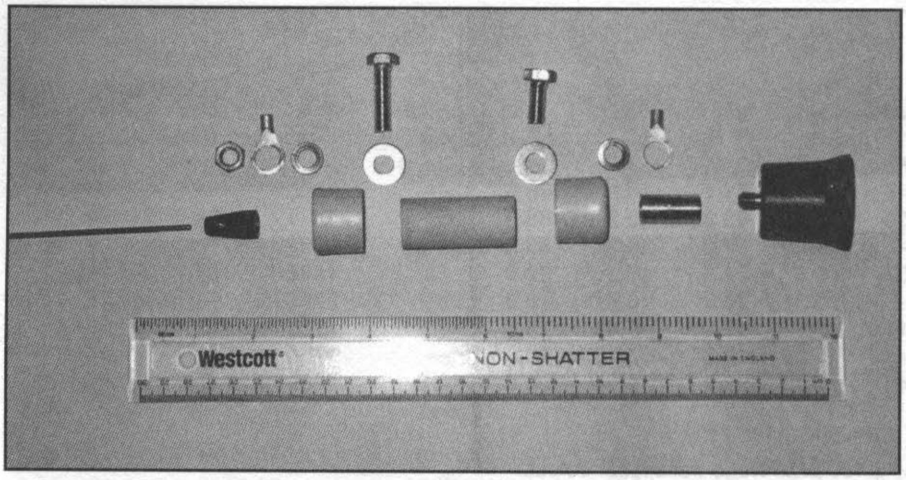

Fig 6—Layout of parts for the 10-meter coil before assembly. The parts for the other bands are identical except for the length of the CPVC pipe.

The roof of my vehicle is a single sheet of 0.035-inch steel. Naturally, locating the antenna hole must be done very carefully and double checked before starting to drill. My wife's pie pan served well to catch the chips and prevent the drill from piercing the ceiling fabric. (She hasn't noticed the dent in the pan yet.)

Using a variable speed drill, drill a small pilot hole, followed with a ³/₈-inch drill and then a ¾-inch Greenlee punch. The punch is actually the easiest part of the operation. I ran the coax to the driver's side of the vehicle down the post to the left of the windshield and under the carpet to the center console in the vehicle. A metal coat hanger makes a good tool to fish the coax under the carpet and through a small hole cut in the carpet. The total length of RG-58A cable in my installation was 11.5 feet (the original length on the NMO-K mount being 17 feet).

My particular vehicle center console had a plastic cover, roughly 9 by 9 inches,

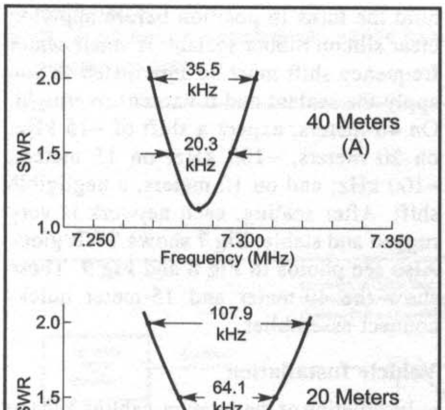

Fig 7—Final measured SWR in the HF bands.

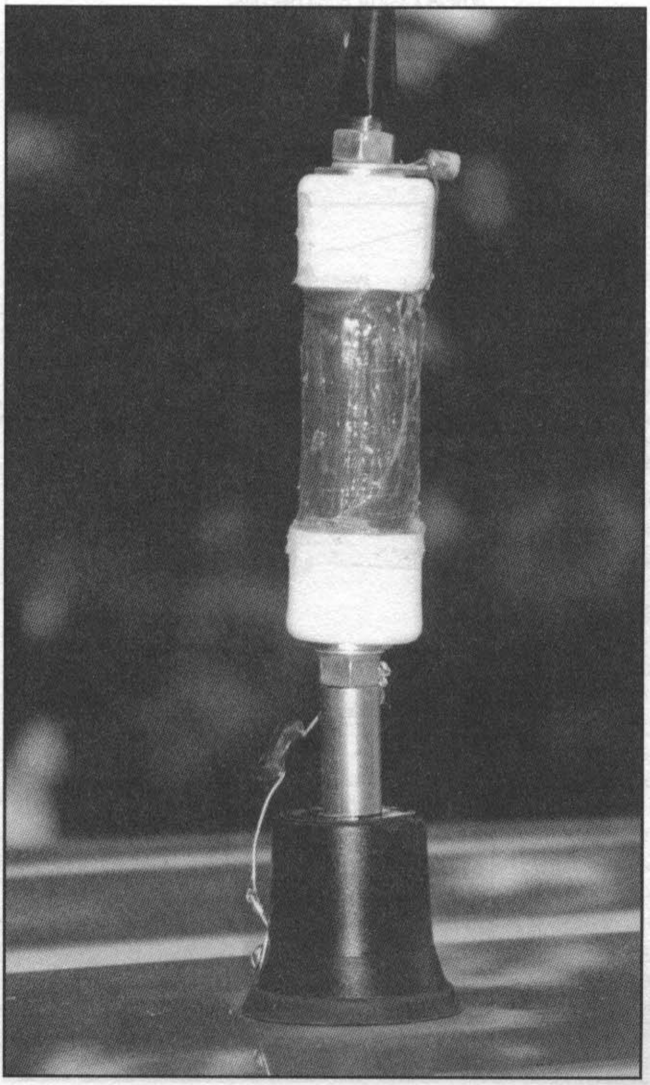

Fig 8—40-meter matching network in place on the vehicle roof. Note the 750 pF dipped-mica capacitor from the lower end of the coil to the ground point on the NMO 150 base. Lead inductance causes the capacitor to appear larger in value at the operating frequency.

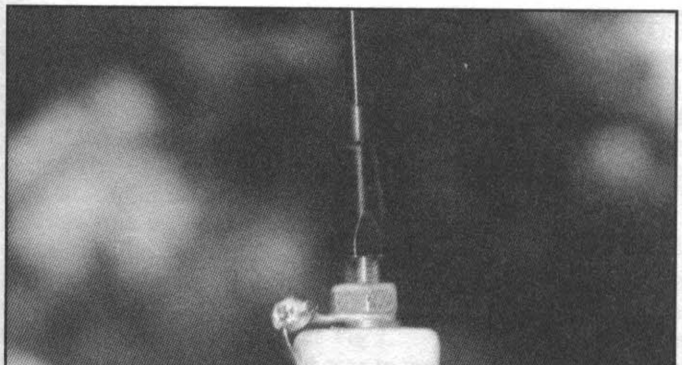

Fig 9—15-meter matching network. Adjustment of the coil inductance is by spreading turns to achieve the desired center frequency. Silicon rubber sealant is applied after adjustment. Allowance must be made for a downward shift in frequency as the sealant cures. See text.

Fig 10—The multiband radio is mounted on a small wooden platform that also holds the GPS receiver. A manually-operated coaxial switch connects the transceiver's dual outputs to the single antenna feed line. A cardboard mockup of the wooden platform was made first, in order to ensure a good fit in the center console.

snapped in place bridging the gap from center dash to the cup holders. I removed this cover, revealing access to the wires going to the "powerpoint" block and sufficient space to mount the radio. At first my idea was only to mount the front panel of the radio there, while locating the main part under the rear seat. It was soon apparent that a much simpler and cleaner installation would result by mounting the entire radio together.

I built a wooden platform to hold both the radio and my GPS receiver, with the whole assembly secured in place by a plastic fabric strap threaded under the console frame. Just to be sure, I made a full-size cardboard model of the wooden platform first to zero in on the best size, shape and mounting. A photo of my radio installation with GPS is shown in **Fig 10**.

On Air Performance

After seven months experience using the 4-foot whip on all bands, let me offer some general comments, followed by specific remarks for each band. Overall the antenna worked better than expected.

Signal reports were almost always quite favorable, with many operators expressing surprise at the performance of an antenna only 4 feet high. I can change bands in about 90 seconds, with the impedance match being repeatable and stable over many months. Here are my band-by-band observations:

- **40 meters**: Skywave contact distances ranged from 40 to 750 miles. Signal reports received typically varied from S7 to S9. Considering that my actual radiated power was probably about 3 W, the performance was very good.
- **20 meters**: Skywave distances ranged from 700 to 1200 miles, with signal reports received varying from S3 to S9. Ground-wave contacts at 9 miles were made in the New Haven, CT, area with S6 being a typical report. It was fascinating to work in a net with both local stations on ground wave and distant stations at 1100 miles by sky wave. While traveling in Ohio, I had a QSO with an incoming jet over Canada arriving from Milan, Italy.
- **15 meters**: This is a good long-distance band with relatively little QRM and was frequently open in the year 2000. Contact distances varied from 1100 to 2050 miles, with signal reports from S5 to S9. I spoke mobile to mobile from eastern Missouri to Seattle, Washington. Mobile-to-mobile over a long distance is always a thrill. I had quite a long QSO while on Route 70 in Ohio with a station in San Jose, Costa Rica.
- **10 meters**: Contact distances were from 1100 to 2700 miles, including QSOs to Alaska and Grenada. Reports varied from S5 to S9.

Acknowledgements

My thanks to all the operators who let me into their QSOs to check out the new mobile antenna. Special thanks go to my friends Dave Dalziel (N4ICE, North Palm Beach, FL) and Irv King (W1ERE, Northford, CT) who gave advice and set up schedules to run comparative tests.

NOTES AND REFERENCES

[1] R. Dean Straw, N6BV, Editor *The ARRL Antenna Book*, 19th Ed, Chapter 16: Mobile and Maritime Antennas, pp. 16-29.

[2] Donald K. Reynolds, K7DBA, "The 5/8 Wavelength Antenna Mystique," *The ARRL Antenna Compendium, Vol 1* (Newington: ARRL, 1985), pp 101-106. Reynolds argues that in practice a ½-wavelength antenna may actually be better on a vehicle due to the less than perfect ground.

[3] EM Scientific, Inc., *MININEC for Windows*, 1996.

[4] R. Dean Straw, N6BV, Editor, *The ARRL Antenna Book* (19th Edition), Chapter 16, p 16-9.

A Stealth RV Antenna

By Jack Schuster, W1WEF
408 Thompson St
Glastonbury, CT 06033

You're right…if there was ever a place you don't need a hidden antenna, it's on your RV! So why is W1WEF writing an article about a stealth RV antenna? Read on!

One of the joys of RVing is meeting hams whom you spot by their antennas. In ten years of enjoying this adjunct hobby, my wife and I have met many hams, and we've seen a wide variety of homebrew and commercial antennas in RV parks.

We're on our third RV, and I have always enjoyed operating while parked for the night or before breakfast while my wife is still asleep. Needless to say, I operate mostly CW with headphones. For the first few years, I used a Kenwood 930S, for which I built an oak cabinet that would prevent it from sliding while taking up half of the kitchen table. Later on, I used an ICOM IC-706, which took a lot less space.

In our first "Class C" RV and in our second motor home, a "Class A" model, I mounted a Hustler on a rear roof rail. With a base spring and a rope attached to the mast, I could pull the rope from the ground, and fold the antenna at the spring while traveling. The Hustler always worked great both in the Class C with an aluminum roof and the Class A with a rubber roof over an aluminum frame.

The only drawback to my earlier installations was that I had to climb up on the roof to change bands. It certainly can't be related to my getting older… perhaps I'm just getting lazier! As the years went by I tended to always leave the 20-meter coil on the antenna and seldom climbed to the roof to change bands. I had a radio that could operate on all the HF bands—with a monoband antenna.

I wanted to do something different on our brand spanking new RV #3. See **Fig 1**. Although it was another Class A, this one didn't come with a roof rail. Frankly, other than using it to support the antenna, I had no other need for a roof rail. I considered the alternatives that would allow me to operate the HF bands on 80 through 10 meters. The only easy place to mount an antenna on this RV appeared to be off the rear ladder, if I were to avoid drilling holes in vital places.

I noticed that the ladder was not visibly attached to the chassis of the RV anywhere, and knowing how they're typically constructed, I suspected that the ladder mounting screws might not be going into the aluminum frame. In fact, the way the ladder was built, it was insulated from the mounting brackets by plastic inserts in the brackets. Hmmm, I wondered if somehow I could use the ladder for my antenna?

So that's exactly what I did. Just to be sure, I checked continuity from the ladder to the chassis and it checked open. Then I mounted my ICOM AH-4 automatic tuner under the RV in a convenient spot that was close to the bottom of the antenna but tucked into the frame so it was protected from the road. I mounted the tuner using heavy-duty

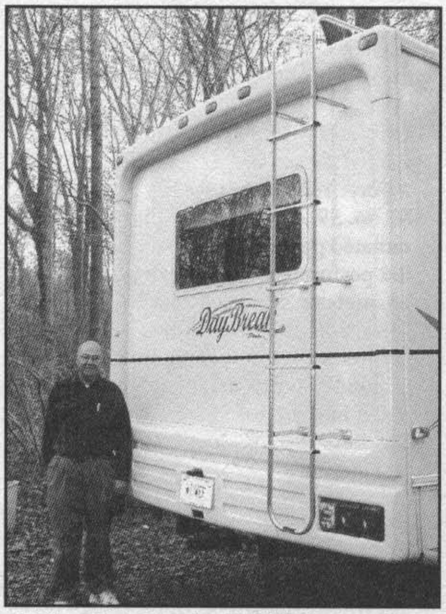

Fig 1—Photograph of W1WEF standing next to his Class-A motor home. The ladder at the back is the stealth antenna.

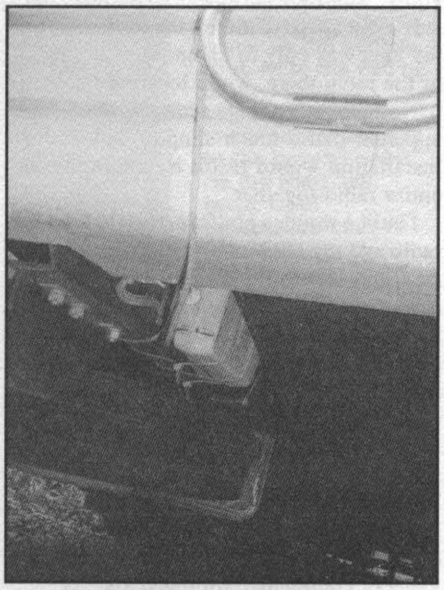

Fig 2—Photograph of the ICOM AH-4 tuner mounted under the rear bumper of W1WEF's motor home, with an insulated wire going to the ladder.

2-foot plastic ties available from Home Depot and similar stores.

The tuner connects to the ladder through about a foot of polyethylene-insulated wire extracted from a piece of RG-213 coax. I drilled a small hole in the ladder, slightly off center from the bottom so it wouldn't interfere with use of the ladder. The wire connects to the ladder with a sheet metal screw and solder lug. A short ground braid using a flattened piece of coax braid ties the tuner to the chassis ground. See **Fig 2**.

I routed the control cable and coax to the rig along the frame, being careful to keep away from the exhaust system, using cable ties to hold them in place. It found it necessary to drill a hole through the floor to bring cables into the "shack," bringing them in underneath a bench seat beside the table. I mounted an SO-239 coax connector on the front of the bench seat near the wall and I snaked the control cable through a tight-fit hole drilled beside it.

HOW WELL DOES IT WORK?

With the IC-706 MkIIG and the AH-4 automatic tuner, I can operate anywhere in the 80 through 6-meter bands, including the WARC bands. I can tune up auto-matically in 2 seconds.

I suppose I could tell you I got reports of "ten over nine" all the time, but I also have called stations at times that it seemed couldn't hear me. Depending on propagation, it sometimes gets out great and at other times I might as well have a wet noodle for an antenna.

If I really want to enhance my signal, I shoot a random length of wire as high as I can into a nearby tree and then attach it to the ladder with a copper clip at the feed point. Most of the campgrounds we stay in have trees. The automatic tuner still tunes all bands and the extra height generally pays off.

One final precaution if you try this second scheme on your RV: Add to your checklist: "Take down the wire antenna!" See you on the bands, RV to RV.

A Mobile Antenna Mount for Difficult Vehicles

By Jim Smith, N3UZ
105 Fantasia Dr
Newark, DE 19713-1903
E-mail: **N3UZJim@aol.com**

Here are some tips on mounting an HF whip on different types of vehicles. One size definitely does not fit all!

When I finally decided to upgrade my license a year and a half ago I thought it would be fun to run HF mobile QSOs on my way to and from work. At the time I had a full-sized Ford Club Wagon van in which I didn't really want to drill holes. Nor did I wish to grossly modify the interior or exterior. I looked into several mounts and found each one flawed for mounting on my van.

The antenna installation for 2 meters was fairly easy, and I had used similar installations on several cars and trucks in the past. This was an on-glass antenna from Antenna Specialists. However, putting up an HF antenna posed the real problem.

An article in April 2000 *QST* on page 33 about a multiband homebrew antenna made from PVC pipe and junk-box parts started a project that evolved over several months into this article. In the article, "$20 Martian Death Ray," Frank W. King, KM4IE, showed his antenna installed on an SUV with a bumper-style mount.

When I made this antenna (an excellent one once I was able to mount it on the van) and tried to do the same thing for mounting to the bumper, there wasn't enough space to clear the rear doors when they were opened. To get the needed clearance, I had to move the mount from the bumper to a section of 2×2-inch square aluminum tubing with 11/32-inch wall thickness that just happened to fit into the cross member of the trailer hitch below the bumper. I drilled a ¼×20 hole and tapped in the cross member of the hitch for a stainless-steel bolt that was used to press against the aluminum tube to keep it tight.

Too Close to the Body

This made things a lot better for spacing and got everything clear of the doors. However, a new problem arose with this relocation, which I would have had even if I had been able to place the mount on the bumper. One of the differences between an SUV installation and a van is the relationship of the body metal panels to the loading coil. On the SUV the coil was above the roof at a point well away from where the metal starts its sweep forward. This keeps the body metal away from the antenna. On the van the coil and most of the vertical element was still parallel and very close to the metal all the way up to the roof. Because of this coupling the antenna would not load properly nor would it tune at all.

I looked at the problem for a couple of days. I need to elevate the loading coil above the roof if it were to be of any use. I found some 1-inch copper pipe and fittings in my garage. These looked like they should work for adding some height to the bottom of the antenna. A few simple measurements and some cutting with a tubing cutter produced the needed copper parts. I made a quick trip to the local hardware store for some ¾×1-inch carriage bolts, nuts and lock washers, and a trip to RadioShack for the SO-239-to-3/8×24-inch antenna mounts (RS 21-961).

Fig 1—The 1-inch copper T, 1-inch copper pipe and the 2×2-inch square tubing. The coax and the rubber crutch tip are also shown.

An important part of this article is to state that none of the measurements are critical. You may have to do some experimenting with parts you can find locally. The diameter of the bottom pipe shouldn't be any smaller than 1-inch copper, just for strength and the ability to put a PL-259 connector inside it. First, I sweated a 1×1×1-inch T and a short stub of 1-inch copper pipe (approximately 2 inches long) together. Then I sweated a 1-inch copper cap to the stub. That completed the bottom section. See **Fig 1**.

I drilled a hole into the square aluminum tube about an inch in from the end. I then filed the round hole into a square opening to accept the square flats of the carriage bolt. I then inserted the bolt into the hole, and put a copper cap over the carriage bolt with a lock washer and nut. The copper cap had been drilled and filed the same way. Note that you must be careful when drilling copper, since a drill bit tends to "grab" in the soft material. Do not try to hold the copper piece being drilled with your hands. Use some means to hold it securely before attempting to drill it.

Tighten down the nut with the bottom of the T facing in towards the van. A 42-inch section of 1-inch copper pipe was then sweated to the T. Finally, I drilled the top 1-inch cap to accept the RadioShack antenna mount (RS 21-961).

Once I completed this step, I inserted RG-213U through a rubber crutch tip and fished the cable up through the copper pipe. This allowed me to solder a PL-259 to the end of the coax and connect the SO-239 portion of the mount to the coax. I placed a star washer and an insulating nylon washer on the 3/8×24-inch stud.

Next, I wrapped a length of bare utility wire around the stud as a "fish" wire to make it easier to retrieve the mount. The reason for this is that the coax and mount must be pushed back down inside the pipe so the top cap can be sweated to the top of the pipe. After this is done and the pipe and fitting cooled down, the coax is then pushed back up until the mount is through the hole. The fish wire is then removed and the top insulator, washer and threaded barrel are tightened.

Extra Support Needed

When I tried the "$20 Martian Death Ray" antenna on the new mount assembly I found that it was too heavy and had too much cross section (wind loading). This meant that the upper portion of the mount needed to be supported with a bracket, as shown in **Fig 2**. I constructed this bracket using 1-inch PVC pipe and fittings. I pressed a short section (8 to 9 inches) of 1-inch copper pipe half way into the PVC pipe and then hammered flat the remaining section, which I bent as necessary to fit between the door and the door frame. Two #10×1-inch sheet metal screws were used to fasten the bracket to the doorframe.

Be careful when drilling these holes, since there may be wiring or rear A/C plumbing in the area. I pressed the PVC T over the bottom copper pipe cap after I applied silicone caulking to the cap and inside the T to glue the pieces together. I attached the ground strap from the car body to the copper pipe just below the PVC T, using a stainless steel hose clamp. And that completed the project, minus a coat of paint to protect against corrosion.

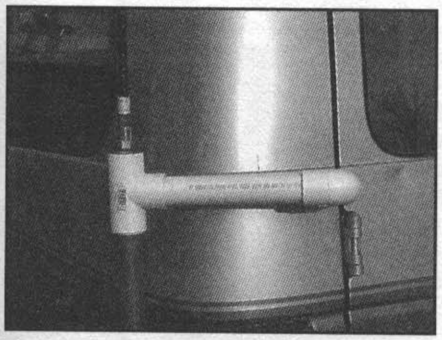

Fig 2—The PVC upper-support bracket, along with a Ham Stick antenna.

Fig 3—Two is always better than one. This configuration worked for many months before I replaced the van.

However, like most operators, I wasn't satisfied with the single antenna, so I decided that two are better than one. I made a mirror image of the mount assembly for the opposite side of the van. I purchased several "Ham Stick" antennas and mounted them, as shown in **Fig 3**. (The "$20 Martian Death Ray" is still in service on a Honda Civic with a conventional bumper mount, doing a fine job.)

I threw my ICOM IC-706 into the van, along with a coax switch, and off I went. Contacts on 20 and 40 meters were great. The 80-meter band and 6 meters just didn't work well for several reasons, mostly QRM. And then, like any project, things made a drastic change. The van went and a brand new 2001 Jeep Wrangler Sport took its place.

Another Car, Another Mounting Problem

The Wrangler posed a different problem from the van. The ends of the bumper are plastic, which makes it hard to mount to the ends of the bumper. The tailgate swings out and prevents mounting anything on the bumper except in front of the license plate and taillight—not a good place. That meant it was back to the tow hitch for a place to support the antennas. This cross member was a bit smaller, so the 2×2-inch aluminum square tubing wasn't going to fit. However, I did find some 1¾-inch square steel tubing with 0.085-inch wall thickness at the local Sears Hardware Store that fit just fine. See **Fig 4**.

Fig 4—An L made of 1-inch copper pipe inserted and bolted to the 1¾-inch square steel tubing bolted through the hitch cross member. Steel tubing is approximately 22 inches long.

This time I sweated a 36-inch length of 1-inch copper pipe to a 90° elbow and then sweated a 14-inch length of copper pipe to the other end of the elbow, forming an L shape. I sweated a 1-to-1¼-inch reducer to the end of the shorter pipe. With a little "convincing," I inserted the reducer into the square tube with the longer pipe going straight up. Then I drilled the pipe so that a bolt could be passed through the square-tube holes and through the copper pipe near the elbow. This made the upright rigid.

Then I drilled and bolted the cross member of the hitch. This made the entire assembly rigid. The hitch was not compromised by this 3/8-inch hole on either side according to the manufacturer. None of the lengths are critical; however, the length into the hitch needs to be as long as practical. The stainless steel ¼-20-inch cap screw and wingnut were added for an additional ground contact, even though it isn't really necessary.

There was one weakness in my old van setup. The copper caps I had used at both ends of the pipe were soft and bent easily. For the top of the pipe on the Jeep I used a 1-inch female brass pipe cap, in conjunction with a 1-inch female pipe adapter. I filed flat a 1-inch area in the center of the top of the pipe cap to make it easier to make a good electrical contact. This resulted in no flexing or bending, so the Ham Sticks needed no further support brackets. See **Fig 5**.

Before I threaded the pipe cap on, I drilled a hole through the copper pipe and square

Fig 5—A 1-inch female threaded brass pipe cap with a 1-inch male threaded-pipe-to-copper-pipe adapter. The center of the brass pipe cap was filed to provide a flat surface for the RadioShack antenna mount.

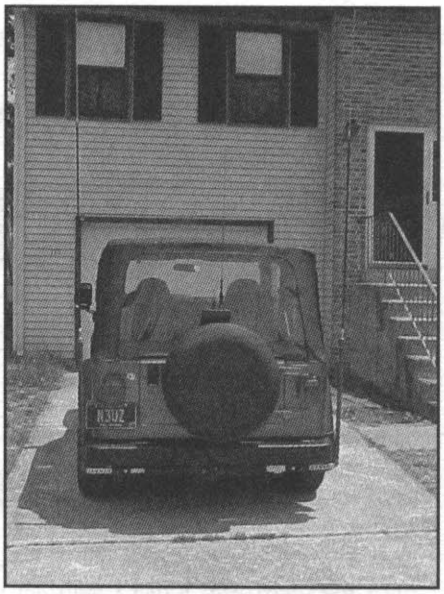

Fig 6—Final assembly but before the paint.

tubing just before the cross member of the hitch. I fished RG-58/U through the hole and up the pipe. This allowed for soldering a PL-259 to the end of the coax and attaching the SO-239 portion of the mount to the coax. The pipe cap was drilled to accept the RadioShack antenna mount (RS 21-961). I connected the PL-259 to the SO-239 in the mount and then threaded the cap onto the pipe adapter. Once this was tight, I pushed the other end of the RG-58 through a 4-inch length of $^3/_8$-inch plastic tubing, used to protect the coax where it passes through the hole in the pipe and square tube. Any sort of protection can be used here.

I fished the coax through a drain plug in the body pan of the Jeep and soldered a PL-259 to the coax's end. Finally I dressed the coax using tie wraps to the frame members of the body pan. After everything checked out, the copper pipe was given several coats of flat black enamel spray paint to match the rest of the trim on the Jeep.

I installed the Ham Sticks and checked with an antenna analyzer. The 80, 40, 20, 15 and 12-meters sticks did not have to be changed from what they had been on the van. The 10-meter Ham Stick had to be shortened a little bit, and the 6-meter version needed a new, longer rod.

As can be seen in **Fig 6**, if one antenna is good, two is even better. Besides, it balances the wind drag and is more appealing to the eye. It also makes it real easy to find the Jeep in a parking lot—just look for the dual antennas! Another hint: Mount the longer antenna on the driver's side, where it is farther away from overhead obstructions, such as branches, damaged road signs, etc.

I found that the on-glass 2-meter mount was not practical on the Jeep. The 2-meter/70-cm antenna assembly is the topic of another article, along with the stealth installation of the Icom IC-706.

The Screwdriver Mobile Antenna

By Pete Wilson, K4CAV
5411 Amick Rd
Julian, NC 27283

K4CAV describes another way to build a screwdriver antenna.

I am involved in two fascinating hobbies that demand a good mobile antenna—HF mobile amateur radio and traveling in a motor home. I have been active in amateur radio since 1955 and have traveled about 150,000 miles in a motor home in the last 13 years. I have seen or used just about every radiating device known to man! I am convinced that the *Screwdriver Antenna* is the best compromise I have seen so far.

For mobile operation the screwdriver antenna is a shortened vertical whose bottom section is large enough to house a modified cordless screwdriver mechanism. The screwdriver turns a lead screw that moves the loading coil up and down to change the resonant frequency of the antenna. There is a top whip section above the loading coil, so basically we have a center-loaded short vertical antenna whose loading coil can be increased or decreased remotely to change the resonant frequency.

The portion of the loading coil exposed above the bottom section of the antenna determines the resonant frequency, while the remaining (unused) portion of the coil that is down inside the bottom section is out of the circuit. This is a novel approach since it is continuously variable in frequency and it is remotely controlled.

As far as I have been able to find out, credit for the original concept belongs to Don Johnson, W6AAQ. His original discovery date is 18 March, 1991. For a small fee, he will provide a copy of his plans. I have talked with Don several times and he has been most helpful.

Because of its complexity, this is not a *first-time* antenna construction project. Years ago I was an apprentice machinist and I took a liking to the lathe. My work is certainly not tool-and-die-maker quality, so the construction of the screwdriver antenna has been an interesting challenge. To date I have built many of these antennas for friends and myself. I am not in the antenna-manufacturing business, and I do not accept orders. This activity is just another facet of my ham radio hobby.

Commercial versions of the screwdriver are advertised in *QST*. You can also build one in a home workshop. My antenna is based on, but is not identical to, the one described in the material I received from W6AAQ. I emphasize that this project requires reasonable mechanical skills and the use of a lathe and a drill press.

In my travels, I have found that there are a lot more lathes out there than you might think. If you are not in a local radio club, join one and poke around a bit—you may be surprised to find how much mechanical and electrical expertise is out there just waiting to be tapped. Be prepared to spend several hours of your time and a few of your hard-earned dollars just for the parts. The finished product will be well worth the effort and the expense.

There are three sub-assemblies:

- The base section
- The modified cordless screwdriver
- The coil itself.

A cover for the coil and a top whip are also required. Not normally a part of the antenna itself, but very necessary, is an impedance-matching device of your choice. More on this later.

The Base Section

The base section of the antenna consists of a 3-foot length of heavy-wall copper pipe (2.00 inches ID, 2.125 inches OD). The last one I bought locally cost approximately $3.00 per foot and this was from a used pipe outlet. On one end of this pipe, solder half of a 2-inch coupling. Save the other half of this coupling for use as a drill template later. See **Fig 1**.

In order for the finger stock[1] to fit on the coupling, you must taper the outer edge of the coupling slightly with a file. Cut some finger stock to the maximum number of whole fingers that will fit on the end of the coupling. See **Fig 2**. A small gap between the ends of the finger stock will not affect the operation.

Use sand paper and/or steel wool to clean the upper end of the coupling where the finger stock is to be soldered. Apply a thin layer of soldering paste to the end of the coupling and press the finger stock all the way down on the coupling. Wrap two turns of #22 bare copper wire around the finger stock to hold it in place during the soldering operation. Lightly tap the finger stock down so it is even all the way around. Don't be alarmed if the #22 wire gets soldered to the finger stock—It is easy enough to peel it off

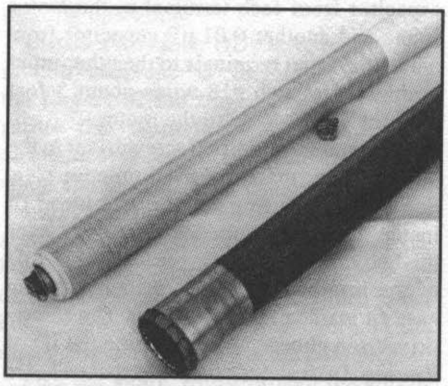

Fig 1—Photograph of the 2-inch copper pipe bottom section and the coil. Fingerstock is soldered to the bottom of the coupling in the copper pipe to make contact with the coil.

after the joint has cooled.

Clamp the copper pipe in a horizontal position for the actual soldering operation. I clamped the pipe to the drill press table. This way the height is adjustable. You'll need a propane torch and a 200-W soldering iron. Use the torch to get the pipe almost hot enough to melt solder, and then use the iron to actually solder the finger stock to the copper pipe.

Do not let the flame of the torch heat the finger stock directly. Too much heat can anneal the finger stock and take the spring out of it. When the pipe is almost hot enough to melt solder, set the torch aside and use the iron to solder each finger to the pipe. It may be necessary to use the torch again to replenish the heat in the pipe before you finish soldering all the fingers.

Machine an aluminum plug for the bottom of the base section. Drill (13/64-inch) and tap (¼-20) three holes in the periphery of this plug. See **Fig 3**.

Modifying the Screwdriver Itself

The Skil Twist model 2105, or the True Value Master Mechanic model 8521 are both good choices for the cordless screwdriver. I have found some factory-rebuilt Black & Decker screwdrivers at attractive prices—especially if the store can't find the battery-charging stand that goes with them. All three of these units are equipped with a 3-V dc motor.

These 3-V dc motors can easily be replaced with a 12-V dc motor from Radio Shack: No. 273-255, $3.00 ea. There are two modifications to the 12-V dc motor. Cut approximately 1/8 inches off the end of the shaft and file a flat to accept the gear from the original motor. Carefully disassemble the screwdriver and remove and discard the batteries, the reversing switch and the motor. See **Fig 4**.

Be sure to retain the small drive gear from the shaft of the original motor. From each of the motor terminals, install a 0.01 µF capacitor from each terminal to the motor frame and another 0.01 µF capacitor from one of the input terminals to the other input terminal. Use two #18 wires about 3 feet long for the 12-V dc to the motor.

To mount the modified screwdriver to the bottom tube, machine an aluminum ring. See **Fig 5**. This ring should be a loose fit inside the bottom tube and a snug fit over the body of the screwdriver body. The OD of the ring should be 1.970 inches for an easy fit inside the base section. The screwdriver you choose will determine the ID of the ring. Drill and tap 6 evenly spaced holes around the periphery of the ring, using a #36 drill and a 6-32 tap. Install a 6-32 × 1/8-inch Allen set screw in every other hole for mounting the ring to the screwdriver body. The other three holes will be used to anchor the ring inside the base section.

The Coil Assembly—The Toughest Part

Before we start, let me make some observations relative to PVC pipe. If you intend to use PVC pipe for your coil form do *not* buy pipe that has been stored horizontally outdoors in the sun. The side that was exposed to the sun will be harder than the side in the shade, and you can take truing cuts until you have no pipe left, and it still will *not* be round.

I get my PVC pipe from a home improvement store where it is stored vertically indoors. I find out from the store clerks which pipe is the newest—It is usually the most nearly round of the whole inventory.

The coil is really the heart of the whole antenna and must be made on the lathe. When finished, you will have a threaded form (10 turns per inch) to wind the coil on, with a tapped brass bushing in each end. The bushing in the bottom will be threaded ¼-20 to accept the lead screw that runs the coil up and down. The bushing at the top of the coil will be threaded 3/8-24 (this is the standard thread used for almost all amateur radio antennas) for the whip.

For the body of the coil, cut a piece of 1½-inch PVC pipe 22 inches long. For the bushings in the ends of the coil, use two 1¼ × ½-inch, schedule-40, PVC "STX" bushings. These bushings come threaded internally for ½-inch pipe on one end and the other end is the equivalent of 1¼-inch pipe. The OD of these bushings is 1.657 inches, and must be turned to approximately 1.605 inches to be cemented in the end of the coil form. See **Fig 6**.

Chuck a ½-inch short pipe nipple in the lathe and screw a bushing on it. Turn these bushings to 1.605 inches OD, and leave a flange to butt the pipe up to when cementing these bushings to the pipe later. Unscrew the bushing from the pipe nipple, remove the nipple from the lathe and chuck a bushing on the surface just machined to 1.605 inches. Screw a brass ½-inch pipe plug firmly into the bushing. Face this plug, center drill and tap drill. The plug for the top of the coil is drilled with an "R" drill (0.339-inch), and tapped 3/8-24 all the way through the plug.

Countersink (60 degrees) slightly for centering later. On one of the corners of this

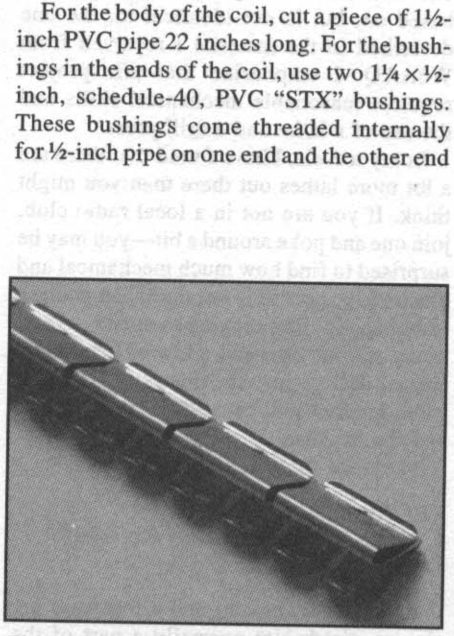

Fig 2—Close-up photo of reverse-bend, clip-on type mounting finger stock.

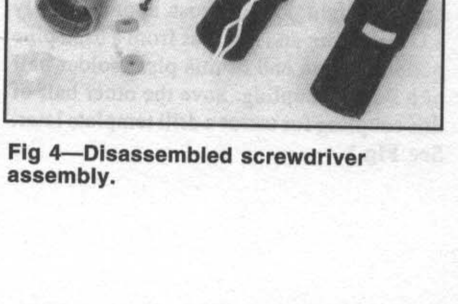

Fig 4—Disassembled screwdriver assembly.

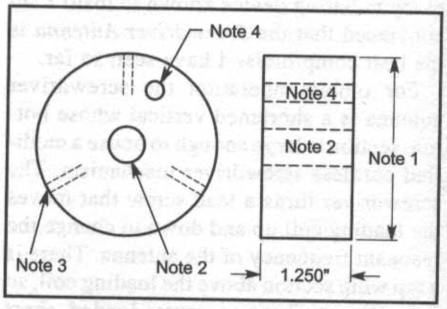

Fig 3—Drawing of aluminum plug for the bottom of the base section. Note 1: Turn OD for a loose fit in base pipe, typically 1.970 inches. Note 2: For standard amateur radio thread, use "R" (0.339-inch) drill and tap 3/8-24. Note 3: Three holes spaced 120°, with no. 5 (0.2055-inch) drill; tap 1/4-20. Note 4: Drill 1/4-inch for motor wire-exit hole. Debur to prevent wire chafing.

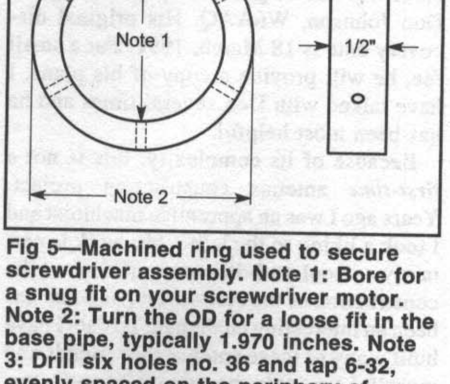

Fig 5—Machined ring used to secure screwdriver assembly. Note 1: Bore for a snug fit on your screwdriver motor. Note 2: Turn the OD for a loose fit in the base pipe, typically 1.970 inches. Note 3: Drill six holes no. 36 and tap 6-32, evenly spaced on the periphery of the ring. Equip every other hole with a 6-32×1/8-inch socket head setscrew. The remaining three holes accept the 6-32 round head screws that anchor the ring to the base section.

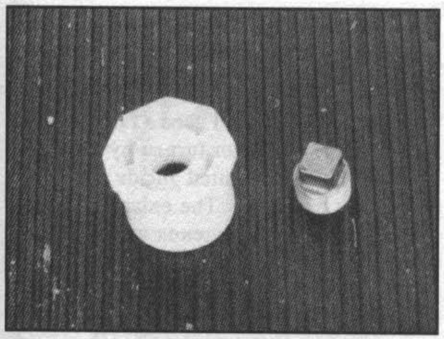

Fig 6—Modified STX bushing turned to fit inside the end of tuning coil.

plug file a small flat, and drill (#36) and tap (6-32) to provide a point of attachment for the top end of the coil wire. On the second bushing, also screw in a brass plug, face, and drill (#7) and tap ¼-20. See Fig 1 again.

Chuck a ¼-20 bolt (with the bolt head behind the chuck jaws) and screw the coil form snugly against the chuck jaws. Support the other end with a center in the tailstock. All the PVC pipe I have used is slightly egg shaped, so take a light truing cut the length of the coil form. The finished diameter is not critical—usually my forms are true with a finished diameter of approximately 1.875 inches.

Grind a thread cutting tool to the same radius as the #16 coil wire (0.025 inch), set the lathe to cut 10 threads per inch and thread at least 150 turns approximately 0.020-inches deep. The ¼-20 threaded bushing is at the bottom of the coil form. I usually wind about 155 turns on the coil just to be safe. At the start of the winding, drill a 1/16-inch hole in the center of the thread groove. Opposite this hole cut a slot in the PVC that will pass a #6 flat brass washer.

Remove the tool holder from the tool post and insert the #16 coil wire through the tool post, then into the hole and pass it through the slot on the opposite side. Solder the wire securely to the washer, let it cool and pull all the slack wire and the washer back through the slot and pull all the slack back out of the hole. The washer will anchor the coil wire to the coil form. Insert two small pieces of hard wood into the tool post, place the coil wire between the pieces of wood and tighten the tool post lightly so there is pressure on the wire. *Caution*: It is easy to have enough friction between the wood blocks and the wire to actually break the #16 coil wire.

With the lathe in the slowest back-gear position and the threading lever engaged, center the wire in the groove in the coil form with the compound slide. Turn the lathe on just momentarily to make sure the tension in the tool post is proper and that the coil wire is centered in the wiring groove. Now, turn the lathe on and wind all but the last two or three turns. Stop the lathe and while the wire is still under tension, put a radiator hose clamp around the coil leaving the last few turns to be wound by hand. Carefully hand wind the last few turns and secure the end of the winding under the 6-32 screw on the corner of the brass pipe plug. Now, remove the radiator hose clamp.

Close to the very bottom of the coil form, drill (#36) and tap (6-32) three holes equally spaced around the coil form. The pulley in the headstock of my lathe has 120 indexing holes in it just for this purpose. Insert a 6-32 nylon screw in each hole and tighten securely. File the screw heads until they will just slip into the base section of the antenna. This forms a longitudinal bearing for the bottom of the coil form as it slides up and down inside the base section.

Relax, the hardest part is now behind you! You should now have a coil of approximately 155 turns of #16 wire on a form that has a ⅜-24 thread at the top to accept a standard whip antenna extension and a ¼-20 thread at the bottom that will accept the ¼-20 lead screw.

For the coil cover, I was fortunate to find a piece of 3-inch OD clear plastic tubing locally. I used a 3-inch PVC pipe cap for the top of the cover. Chuck the pipe cap in the lathe, drill a ⅜-inch hole in the center, and face off the rounded end until the top of the cap is approximately 3/16-inch thick. Remove the cap from the lathe and secure a ⅜-inch bolt in the chuck jaws. Slip the top cap over the ⅜-inch bolt and tighten with a ⅜-inch nut.

Carefully, shorten the pipe cap at least an inch and then bore the cap slightly to accept the clear plastic tube. Use clear acrylic caulk to secure the clear tube into the pipe cap.

For the whip section, I used a full-length CB whip from RadioShack, cut 60 inches long. In my particular installation with the rig tuned to 75 meters, the top of the whip is just under 13 feet 6 inches above street level. This is the magic clearance height on most of the interstate highways.

Final Assembly

The position of the aluminum ring on the body of the modified screwdriver is arbitrary, and there are physical differences in the three cordless screwdrivers mentioned, so it is almost impossible to precisely specify the dimensions of the mounting position of the aluminum mounting ring in the base tube.

Cut the ¼-20 lead screw 24 inches long and file a small flat on one side of one end approximately ¼ inches long. Center punch in the center of this flat, drill (#42 drill) and tap (4-40) all the way through. Screw a 4-40 × 3/16-inch round head screw into this hole. Insert the threaded rod into the ⅜-inch hole in the top of the coil and turn the rod down until all of the rod is threaded through the ¼-inch end of the coil.

The head of the 4-40 screw will not allow the rod to completely exit the ¼-inch bottom of the coil. Install a ¼-inch flat washer and then two ¼-20 hex nuts on the bottom of the lead screw with the washer between the bushing at the bottom of the coil and the two hex nuts. Run these nuts about 2 inches up on the shaft for now. (These nuts will be positioned later and locked together to become the bottom limit for the coil).

Insert the bottom end of the lead screw into the end of the modified screwdriver, and drill #53 (0.059 inch). Use steel wire #16 (0.050 inch), and bend both ends of this wire around the chuck. Hold the motor securely, and apply 12 V dc to the motor wires. Run the motor until the ¼-20 rod between the bottom of the coil and the motor chuck is approximately 3 inches. Run the two ¼-20 nuts and washer up until the washer is just touching the bottom of the brass bushing at the bottom of the coil. Lock the two nuts together.

On a flat surface, lay the coil next to the base section with two turns of the coil exposed beyond the top of the finger stock. Mark the copper base pipe where the 6-32 holes in the aluminum ring line up on the base pipe. This mark is where you will drill the three holes to attach the aluminum motor mounting ring to the copper base pipe. Chuck the unused half of the 2-inch copper coupling in the lathe and index and mark three holes (#36 drill) 120 degrees apart.

Slip this coupling on the end of the base tube and use the coupling as a template to mark the holes in the base pipe. Drill these three holes oversize (I used a #12 (0.189-inch) drill to facilitate alignment with the holes in the aluminum motor mounting ring. It is only fair to warn you that after drilling any holes in the base section, it is mandatory that *all* the internal burrs be removed completely. I made an internal sanding drum of scrap 1½-inch PVC pipe and ¼-20 threaded rod to accomplish the internal sanding operation.

Install a 1⅞-inch (ID) × ⅛-inch (cross section) neoprene "O" ring down in behind the fingers of the finger stock. This will assure that there is good electrical and mechanical contact between the finger stock and the coil assembly.

Insert the coil into the bottom of the base section and push it up until you can see the holes in the aluminum ring through the holes on the base section. Use 6-32 × ¼-inch round head screws and lock washers to hold the motor assembly securely in the base section.

Fish the motor wires through the aluminum bottom plug and insert the plug into the base section until the three ¼-inch holes line up. Use ¼-20 × ½-inch hex-head bolts and lockwashers to anchor the bottom plug in place.

There is just no standard way to mount this antenna—I don't think I have ever seen two identical installations. I mounted mine on the back bumper of the motor home, with a stiff-leg guy anchor to the back of the motor home. See **Fig 7**. I slit a 2-inch piece of PVC pipe for an insulator and used a pipe clamp to attach the guy to the antenna.

Impedance-Matching Devices

While this antenna will resonate at any frequency from 10 through 80 meters, it is not necessarily matched to a 50-Ω coax feed line. Some of the built-in antenna tuners in the newer rigs may possibly have a tuning range sufficient to accommodate this antenna. There have been a number of different schemes published about impedance-matching devices for this type of antenna. The most popular ones that I know of are:

- The toroid balun: 14 bifilar turns on an Amidon T106-2 core tapped at the 12th turn for the connection to the antenna. A 100 pF capacitor across the coax may or may not be used.
- A relay-switching arrangement using a separate relay for 80, 40 and 20 meters. The 80-meter relay switches in approximately 1200 pF; the 40-meter relay switches in about 220 pF; and the 20-meter relay switches in about 125 pF. These capacitance values may be made up with several capacitors in parallel, and may or may not include a small variable capacitance to put the combination right-on for a favorite frequency. The 15- and 10-meter bands usually need no matching devices.
- An inductor across the coax at the antenna feed point. About 30 turns of #16 enameled wire, OD approximately $5/8$ inches with an air core. This is adjusted for the best match on 80 meters by stretching or compressing the turns.

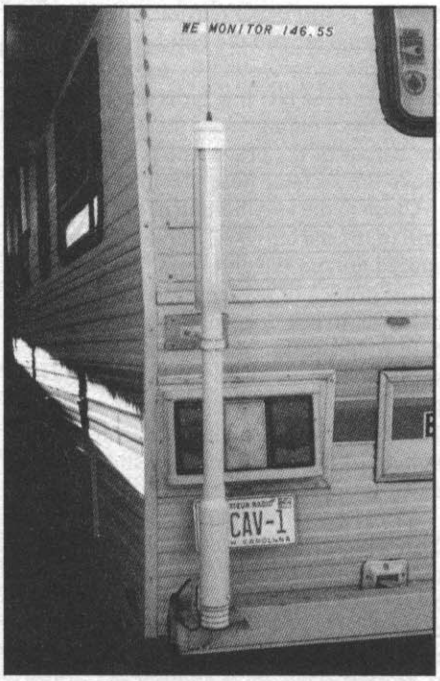

Fig 7—Final antenna mounted on the rear bumper of my RV.

On my installation, I used a remote-operated variable capacitor turned by a 1 RPM, 12-V dc motor mounted inside the lower part of the base pipe. The enlarged section at the bottom of the antenna was necessary to house the variable capacitor and the drive motor. The capacitor is a three-gang broadcast capacitor with the three gangs connected in parallel. The minimum capacitance is 45 pF and the maximum is 1250 pF. I used two DPDT, center-off, momentary-switches to control the tuning and matching operations. By alternately adjusting the inductance of the loading coil and the variable capacitor I can obtain a 1:1 match at any frequency. A dual movement forward and reflected power meter is a real convenience in tuning and matching. Tuning and matching can also be accomplished off-the-air with the aid of an MFJ 259 analyzer.

References and Notes

[1] Finger stock may be obtained from: Gateway Electronics, 8123 Page Blvd, St Louis, MO 63130, tele (314) 427-6116. The size of the fingers is 0.210 inches wide by approximately 0.37 inches long. There are four fingers to the inch of fingerstock and it comes in strips that are 16 inches long. Also see: **http://www.tech-etch.com/rbclip2frameset.html**, which shows the Tech-Etch 250KC070L "reverse bend contacts" for the "clip-on" mounting finger stock.

A Multiband Wire Yagi

By Douglas A. Campbell, N1CWR
146 Kentucky Ave
Oak Ridge, TN 37830
e-mail: **N1CWR@kornet.org**

Here's a 40/20/15/10-meter wire Yagi that can be beamed in two directions at the flip of a switch.

Yagis made with wire elements are a practical alternative to conventional Yagis constructed with aluminum tubing. Their performance (gain and F/B) compares favorably with that of standard Yagis, and their cost advantages (especially on the lower-frequency bands) are substantial.

Wire Yagis are most easily configured as fixed monobanders oriented to favor a single direction of operation. As such they lack some of the flexibility and scope of rotary versions. But these limitations can be lessened if the fixed-wire Yagi can be quickly reversed, and if it can function on more than a single band. In this article I describe a reversible 2-element wire Yagi that exhibits significant gain and F/B on 40, 20 and 15 meters, and that has a usable F/B on 10 meters.

WIRE YAGI DESIGN

The N1CWR wire Yagi has two identical elements, as shown in **Fig 1**. Parallel-wire feed lines attach to each element through a feed-point relay box. Only one element at a time is driven through its feed line. The second element, detached from its feed line by remote switching, functions as a parasitic reflector. The 15-foot element spacing (0.11 λ on 40 meters) is a compromise between optimized performance on any one band, and good performance across several bands. The elements are 69 feet long, using #12 AWG copper. This places the forward gain and F/B peaks within the 40-meter band at the 15-foot spacing. The Yagi's multiband capability stems from its tuned-doublet driven element, and from the harmonic relationships among the traditional HF bands (40, 20, 15, 10 meters).

Fig 2 shows the relay-switching scheme at the element feed points. The full circuit diagram, and that of the relay control box, are shown in **Fig 3**.[1] The feed-point relays, activated on the parasitic element only, perform two functions. First, relays K1 and K2 separate the now unused feed line from the parasitic element—this eliminates element detuning and simplifies (and enhances confidence in) the computer modeling.

Second, both modeling and on-the-air experience show that the wire Yagi performs properly on 40 and 15 meters only when the parasitic element is continuous end-to-end. On 20 and 10 meters, the wire Yagi performs properly when the parasitic element is discontinuous at the element center.

A third relay (K3) placed across each element's center insulator connects the half-elements together as needed. The control box circuitry in Fig 3 allows the two feed-line relays, and the single relay across

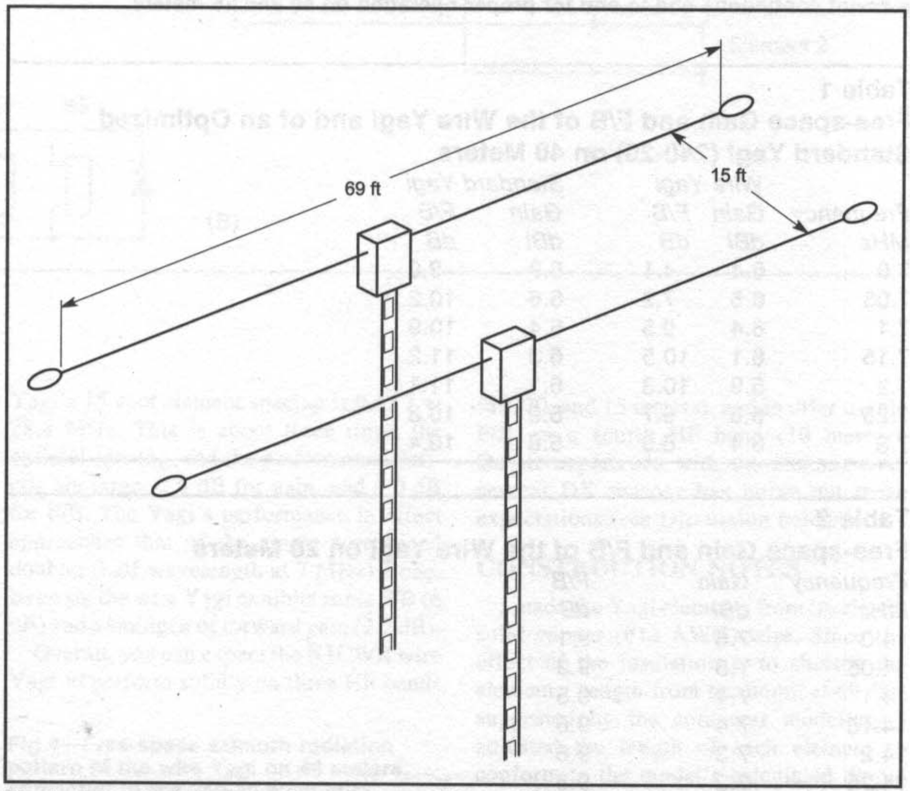

Fig 1—Layout of the two-element, reversible multiband wire Yagi. Element length is for bare #12 AWG copper wire. For other wire types element lengths should be adjusted to resonate at 6.84 MHz at 20-30 feet above ground.

the feed point, to be activated independently. The control box also controls the Yagi's directional switching, with all relays controlled by low-voltage AC/DC through the feed lines.

COMPUTER ANALYSIS

The results of *EZNEC* modeling of the multiband wire Yagi are shown in Tables 1-4 and azimuth radiation patterns are shown in Fig 4-7.[2]

In **Table 1** the wire Yagi's performance on 40 meters is compared with that of an optimized two-element aluminum-tubing reference Yagi.[3] As expected from its thinner elements, the wire Yagi has narrower bandwidth for both gain and F/B, although in-band peak values are nearly the same for the two Yagis. The reference Yagi's slightly better properties arise in part because its element spacing (19.5 feet) is closer to the ideal than the wire Yagi's compromise 15-foot spacing. The wire Yagi's azimuth radiation pattern, shown in **Fig 4**, is indistinguishable from that of the standard Yagi.

On 20 meters (**Table 2** and **Fig 5**) both driven element and reflector behave as close-spaced, two-element collinear arrays (two half-wavelengths in phase). The free-space gain and F/B numbers shown in Table 2 are those typical of a two-element Yagi; that is, 6-7 dBi gain and 9-11 dB F/B. The 15-foot element spacing (0.216 λ at 14.15 MHz) is twice the spacing at which forward gain is maximum, and about 1.5 times the spacing for best F/B. The deficits, however, are small: 0.5 dB for gain and 0.3 dB for F/B. Both performance indices remain nearly constant across the band.

On 15 meters (**Table 3**) the wire Yagi elements are each three half-wavelengths long, and the radiation pattern (**Fig 6**) takes on a typical "butterfly" shape (actually closer to a hawk moth), with four oblique radiation lobes. The 15-foot element spacing (0.32 λ at 21.2 MHz) is close to optimal for best F/B, and about 1.3 times optimal for best gain. The deficits are again small: 0.2 dB for gain, and 0 dB for F/B. As shown in Table 3, Yagi gain is nearly constant across the entire band. However, F/B reaches the typical 2-element Yagi level (9 dB) only above 21.35 MHz. Given the antenna's complex radiation pattern on this band, comparisons with antennas producing the more familiar single-lobe (forward and back) radiation pattern are difficult to make. Analysis of a single-element tuned doublet (half wavelength at 7 MHz) shows that the Yagi's calculated gain and F/B on 15 meters are quite real, exceeding the single-element doublet's performance by the same factor(s) found for the Yagi on 40 and 20 meters.

On 10 meters (**Table 4** and **Fig 7**) the wire

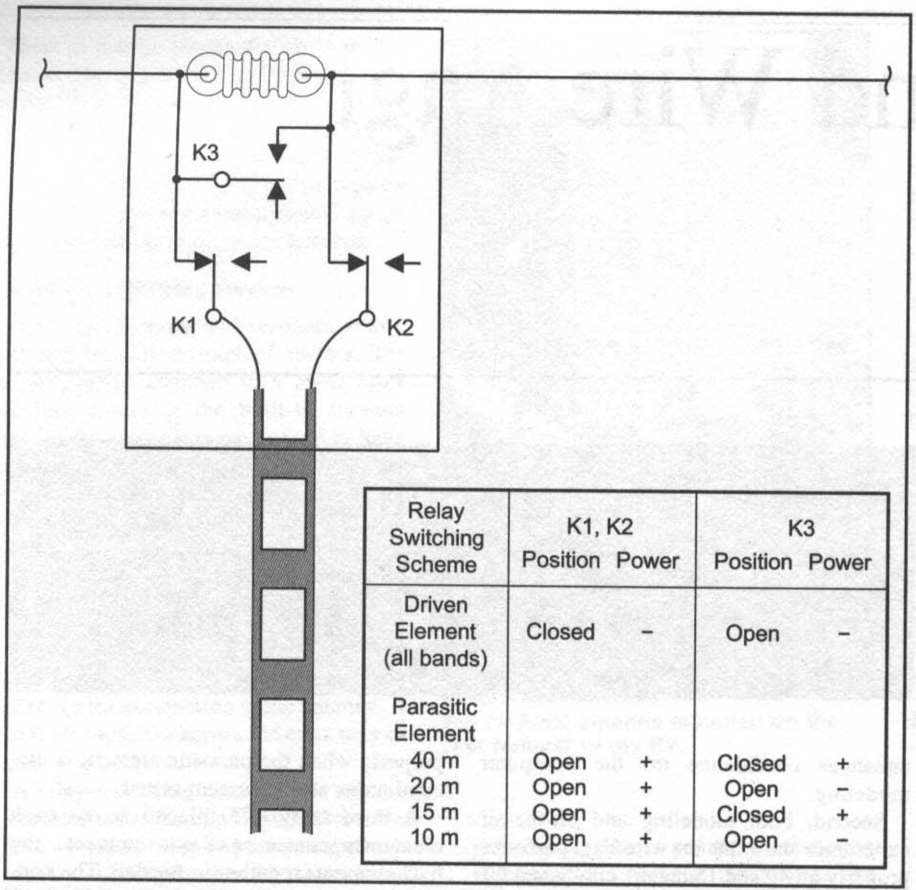

Relay Switching Scheme	K1, K2 Position	K1, K2 Power	K3 Position	K3 Power
Driven Element (all bands)	Closed	–	Open	–
Parasitic Element				
40 m	Open	+	Closed	+
20 m	Open	+	Open	–
15 m	Open	+	Closed	+
10 m	Open	+	Open	–

Fig 2—Relay switching scheme at the element feed points. Relays K1 and K2 (normally closed), when activated in the parasitic, separate the unused transmission line from the antenna element. Relay K3 (normally open), when activated in the parasitic, shorts out the center insulator and makes the parasitic element continuous end-to-end for proper operation on 40 and 15 meters.

Table 1
Free-space Gain and F/B of the Wire Yagi and of an Optimized Standard Yagi (240-20) on 40 Meters

	Wire Yagi		*Standard Yagi*	
Frequency MHz	*Gain dBi*	*F/B dB*	*Gain dBi*	*F/B dB*
7.0	6.4	4.1	6.8	9.0
7.05	6.6	7.2	6.6	10.2
7.1	6.4	9.5	6.4	10.9
7.15	6.1	10.5	6.3	11.2
7.2	5.9	10.3	6.1	11.1
7.25	5.6	9.7	5.9	10.8
7.3	5.4	8.9	5.8	10.4

Table 2
Free-space Gain and F/B of the Wire Yagi on 20 Meters

Frequency MHz	*Gain dBi*	*F/B dB*
14.0	7.6	9.1
14.05	7.5	9.3
14.1	7.4	9.5
14.15	7.4	9.6
14.2	7.3	9.6
14.25	7.2	9.6
14.3	7.2	9.6
14.35	7.1	9.5

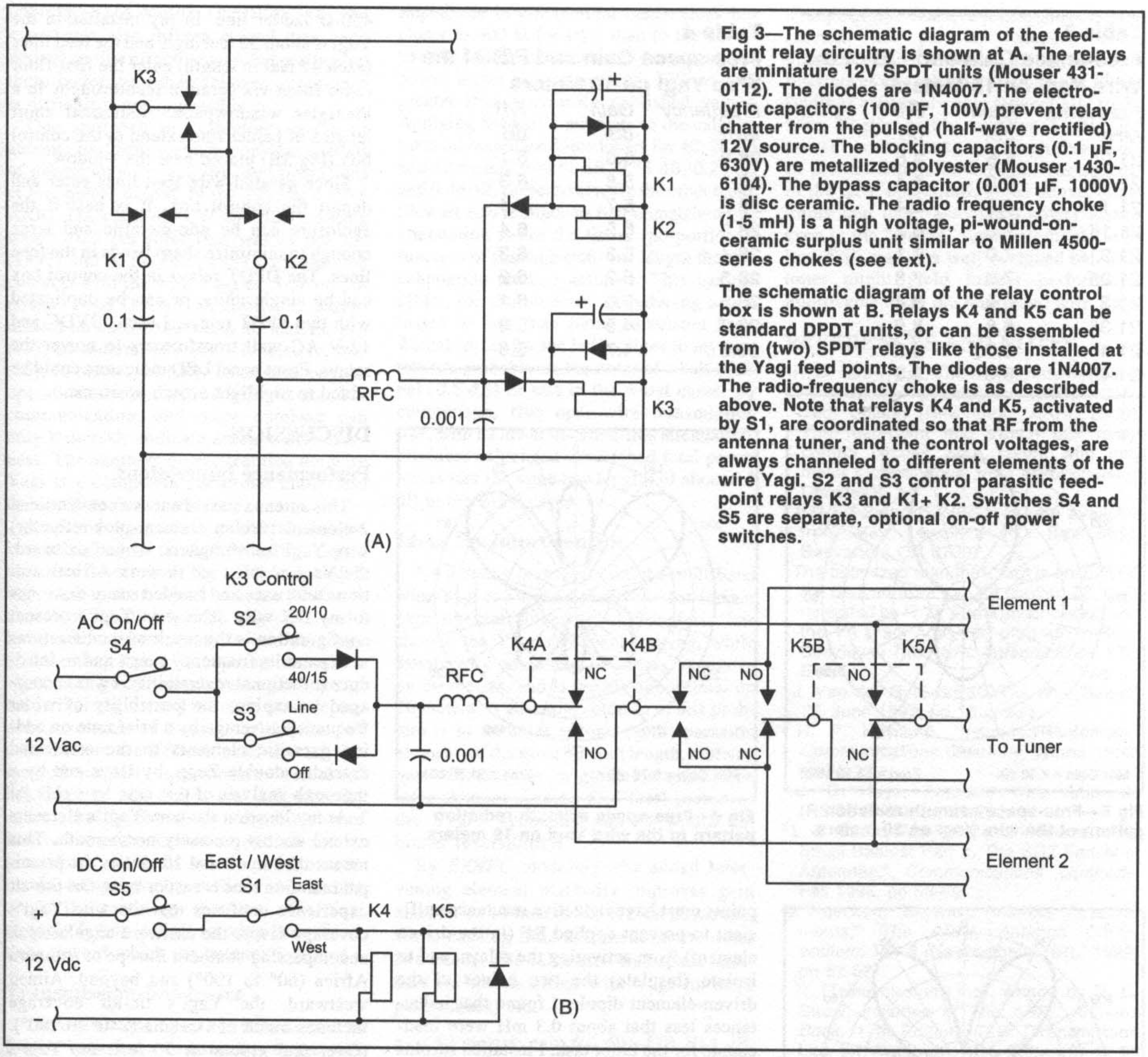

Fig 3—The schematic diagram of the feed-point relay circuitry is shown at A. The relays are miniature 12V SPDT units (Mouser 431-0112). The diodes are 1N4007. The electrolytic capacitors (100 µF, 100V) prevent relay chatter from the pulsed (half-wave rectified) 12V source. The blocking capacitors (0.1 µF, 630V) are metallized polyester (Mouser 1430-6104). The bypass capacitor (0.001 µF, 1000V) is disc ceramic. The radio frequency choke (1-5 mH) is a high voltage, pi-wound-on-ceramic surplus unit similar to Millen 4500-series chokes (see text).

The schematic diagram of the relay control box is shown at B. Relays K4 and K5 can be standard DPDT units, or can be assembled from (two) SPDT relays like those installed at the Yagi feed points. The diodes are 1N4007. The radio-frequency choke is as described above. Note that relays K4 and K5, activated by S1, are coordinated so that RF from the antenna tuner, and the control voltages, are always channeled to different elements of the wire Yagi. S2 and S3 control parasitic feed-point relays K3 and K1+ K2. Switches S4 and S5 are separate, optional on-off power switches.

Yagi's 15-foot element spacing is 0.43 λ at 28.4 MHz. This is about three times the optimal spacing, and the performance deficits are large: 2.6 dB for gain, and 4.0 dB for F/B. The Yagi's performance in effect approaches that of the single-wire tuned doublet (half-wavelength at 7 MHz) alone. Even so, the wire Yagi exhibits some F/B (6 dB) and a smidgen of forward gain (2.2 dB).

Overall, you can expect the N1CWR wire Yagi to perform solidly on three HF bands (40, 20, and 15 meters), and to offer usable F/B on a fourth HF band (10 meters). On-air experience with the antenna over several DX seasons has borne out these expectations (see Discussion below).

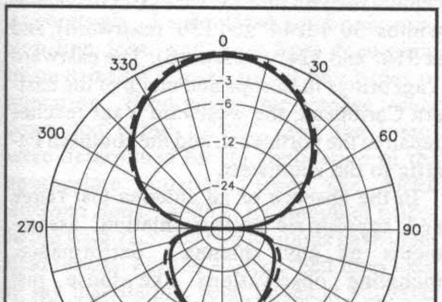

Fig 4—Free-space azimuth radiation pattern of the wire Yagi on 40 meters, compared to the 240-20 aluminum-tubing Yagi from *The ARRL Antenna Book*. The latter has a 20-foot boom and hence slightly more gain.

CONSTRUCTION NOTES

I made the Yagi elements from insulated, solid copper (#12 AWG) wire. Since the effect of the insulation is to shorten the elements' length from the nominal 69 feet suggested by the computer modeling, I adjusted the length of each element to conform to the model's calculated dipole resonance of 6.84 MHz at 20-30 feet above ground.[4,5]

I mounted the feed-point relays and their

Table 3
Free-space Gain and F/B of the Wire Yagi on 15 Meters

Frequency MHz	*Gain dBi*	*F/B dB*
21.0	6.6	3.6
21.05	6.8	4.4
21.1	6.9	5.4
21.15	7.0	6.2
21.2	7.0	7.1
21.25	7.0	7.8
21.3	6.9	8.4
21.35	6.8	8.9
21.4	6.7	9.2
21.45	6.6	9.3

Table 4
Free-space Gain and F/B of the Wire Yagi on 10 Meters

Frequency MHz	*Gain dBi*	*F/B dB*
28.0	6.0	6.1
28.1	5.8	6.3
28.2	5.7	6.4
28.3	5.5	6.4
28.4	5.3	6.3
28.5	5.2	6.2
28.6	5.0	6.1
28.7	4.9	5.8
28.8	4.7	5.6

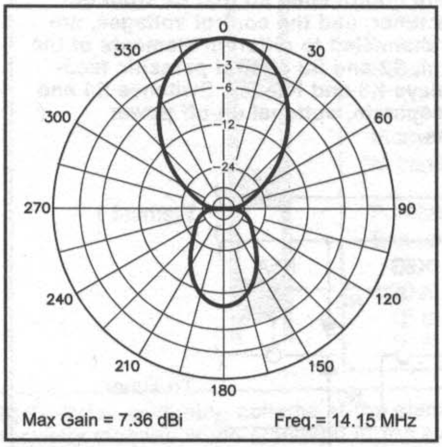

Fig 5—Free-space azimuth radiation pattern of the wire Yagi on 20 meters.

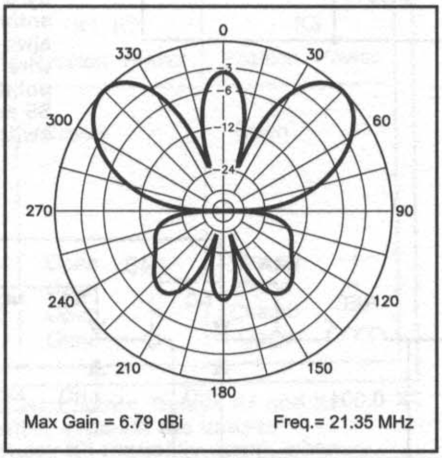

Fig 6—Free-space azimuth radiation pattern of the wire Yagi on 15 meters.

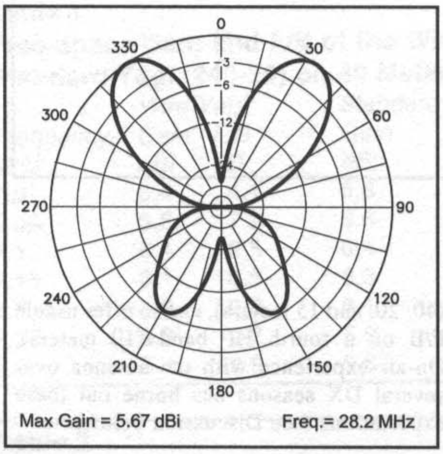

Fig 7—Free-space azimuth radiation pattern of the wire Yagi on 10 meters.

associated components (Fig 3A) on perfboard and connected them by point-to-point wiring. By direct tests, the relays at the Yagi feed point(s) handled 100 watts RF without complaint. I bench-tested the relays for switched-on endurance for periods up to eight hours, with no evidence of heating or other stress.

The radio-frequency chokes at the feed points must have inductive reactance sufficient to prevent applied RF (in the driven element) from activating the relays, and to isolate (insulate) the two halves of the driven-element dipole. I found that inductances less that about 0.3 mH were inadequate for the latter task. I installed surplus high-voltage, pi-wound-on-ceramic, radio-frequency chokes, estimated at 1-5 mH, and similar to Miller 4500-series chokes.

The feed-point relay assemblies were enclosed in small plastic boxes (Hammond 1594C with weatherproofing kit 1594SKC, Mouser 546-1594C-BK and 546-1594SKC). The antenna and feed-line wires entering the boxes were held in place by nylon machine nuts (6-32 for the feed line wires, 4-40 for the antenna wires) threaded on to the insulated wires and tightened against the box wall. One nut on either side of the box wall (two nuts per wire) anchored the wires firmly and helped to seal the holes. The half-dipole ends inside the box were affixed to a short (1.5 inch) Plexiglas center insulator for added strain relief. I further weatherproofed the feed-point boxes with coax seal. A small packet of silica gel was tucked into each box.

I fed the Yagi elements with commercial 450-Ω ladder line. In my installation the Yagi is about 50 feet high, and the feed lines (each 42 feet in length) enter the first-floor radio room via ceramic feedthroughs in a Plexiglas windowpane. Additional short lengths of ladder line extend to the control box (Fig 3B) placed near the window.

Since parallel-wire feed lines enter and depart the control box, it is best if the enclosure can be non-metallic and large enough to minimize sharp bends in the feed lines. The DPDT relays in the control box can be single units, or can be duplicated with two SPDT relays. I used 12VDC and 12-V AC wall transformers to power the relays. Front panel LED indicators could be added to highlight switch positions.

DISCUSSION

Performance impressions

This antenna started out as a conventional 2-element (driven element-plus-reflector) wire Yagi for 40 meters. Aimed eastward, the Yagi enabled me to work African stations with ease and I added many new ones to my DX tally. The wire Yagi's present configuration is the result of modifications to expand its frequency range and to introduce directional reversibility. I was encouraged to explore the possibility of wider frequency coverage by a brief note on adding parasitic elements to the center-fed extended double Zepp, by Heys and by a thorough analysis of this case by Cebik.[6,7]

At my location the wire Yagi's elements extend almost precisely north-south. This means that on 40 and 20 meters the principal radiation lobe is east or west. On-the-air experience confirms that the wire Yagi's coverage favors the eastward angular span encompassing southern Europe to southern Africa (60° to 100°) and beyond. Aimed westward, the Yagi's on-air coverage includes much of Oceania (240° to 280°). (Over real ground at 50 feet, the Yagi's calculated –3 dB beamwidths average 75° on 40 meters, and 48° on 20 meters.) On 15 meters, the north-south element orientation centers the two oblique lobes (–3 dB beamwidths: 30°) at 44° and 136° (eastward), and at 316° and 224° (westward). The eastward Yagi brings in Europe and much of the eastern Caribbean; the westward Yagi reaches Japan to the northwest, and the southern Pacific to the southwest.

In the absence of an antenna test range and appropriate instrumentation, assessments of any antenna's performance, including observations like those just described, must be largely subjective. Often, the antenna under test is the only antenna, and the crucial question "Compared to what?" remains unanswered. The recent Cycle 23 sunspot peak has given us HF propagation conditions in which even the least-efficient antennas can yield impressive DX results. Operating skill and experience also influence (and may even define) station effectiveness. Separating out these factors and their relative importance is difficult if not impossible.

One approach to evaluating on-the-air antenna performance is to consider periods of minimum solar activity, and operations at low power output. In the 1997 and 1998 ARRL DX contests (CW and SSB), during which 10.7 cm solar flux was in the 70s (1997) and in the 90s (1998), I made 948 contacts with the wire Yagi at 5-W output power. Total QSOs (DX entities in parentheses) on each band were: 40 meters, 173 (45); 20 meters, 299 (69); 15 meters, 407 (86); 10 meters, 69 (20). To be sure, contest operations are not typical of most amateur communication, and these numbers can only indirectly indicate antenna effectiveness. The numbers do suggest that the wire Yagi is a competent performer under less than perfect circumstances.

A second approach is to look at changes in received signal strength when the Yagi's direction is switched. The computer modeling implies that signal-strength shifts in excess of 20 dB might be expected, and I have often observed shifts in this range (3-5 S-units). Rapid fluctuations in received signal strength, uncertainties regarding signal arrival angles, and the need for independent assurance of S-meter calibration, all contribute to the difficulties of making this method properly quantitative. Kuecken[8] has directly addressed, and substantially solved, these problems by a combination of innovative instrumentation and on-the-air procedures. Without such careful assessments, reception observations risk ending up in the tautology that the wire Yagi strongly favors signals arriving from directions toward which the antenna is aimed.

Transmission-line losses

The use of tuned parallel-wire feeders to finesse impedance mismatches at the wire Yagi's feed point is not without hazard. As designed, the wire Yagi operates with high SWR on all four bands, a condition that can cause power losses in the transmission line. Accordingly, I calculated total transmission-line loss, and loss from feed-point mismatch (SWR loss), for all four bands of operation. Feed-point impedances were computed using *EZNEC*, and the losses were determined by (1) application of the appropriate equations from *The ARRL Antenna Book*[1] and (2) by computer calculation with *TL*.[9] The two methods gave identical results. For the 42-foot feed lines used in my installation, total losses at 7.0 MHz and 14.0 MHz (the worst cases) were 0.26 dB and 0.29 dB, respectively. Total losses were 0.14 dB at 21.0 MHz and 0.22 dB at 28.0 MHz. In all cases most of the total loss was due to mismatch loss.

Stewart[10] has found that the characteristic impedance of commercial ladder lines lies closer to 400 Ω (or less) than to the advertised 450 Ω, and that measured matched-line power losses are, on average, 30% to 40% greater than previously published values. Applying Stewart's numbers to the calculations increased total line losses for 40, 20, 15 and 10 meters to 0.61 dB, 0.73 dB, 0.23 dB and 0.44 dB, respectively. On the other hand, Stewart also reminds us that unmatched line attenuation is not the linear (proportional) function of transmission-line length that the calculation method assumes. This has the effect, for shorter lines, of reducing actual losses to less than those calculated here. Actual losses for the ladder lines in my system are probably on the order of a half decibel (0.5 dB) or less in the worst cases. By comparison, true open-wire transmission line, with its lower matched-line attenuation, produces calculated unmatched total power losses (for the same line length) of about 0.3 dB in the worst cases.

Ideas for improvement

No antenna is perfect, and the multiband wire Yagi is surely a candidate for further experimental tinkering. As analysis has shown, the Yagi's element spacing, while satisfactory on 40 and 15 meters, is less so on 20 meters, and is clearly suboptimal on 10 meters. A potential solution to this problem is to mount a second (split) parasitic element, of the same 69-foot length, midway between the two original elements. The inter-element spacing (7.5 feet) preserves the Yagi's symmetry and so would not hinder reversibility.

By *EZNEC* modeling, the added intervening element markedly improves gain and F/B on 10 meters and F/B on 20 meters, while causing little detriment on the other two bands. The calculated free-space numbers for the modified wire Yagi (in-band peak values) are:

- 40 meters: gain 6.6 dBi, F/B 10.4 dB
- 20 meters: gain 7.6 dBi, F/B 14.3 dB
- 15 meters: gain 6.9 dBi, F/B 8.6 dB
- 10 meters: gain 7.9 dBi, F/B 13.9 dB.

Refer to Tables 1-4 for comparisons with the original wire Yagi. Though the extra parasitic element would add structural complexity to the array—and perhaps limit installation choices—it is a modification worth considering.

The wire Yagi requires an antenna turner with a balanced output. The proper device is a balanced tuner, rather than the commonly available unbalanced tuner equipped with an output balun.[11,12,13,14] My own experience with such a compromise tuner, though, has been satisfactory, with no evidence of the tuning instability or component warming that might be expected from RF absorption or a poorly balanced output.

Direct RMS voltage measurements at the balanced output of the tuner, determined for a range of non-reactive loads, showed good (though not perfect) balance, which dropped off somewhat at higher load resistances and at higher frequencies. These findings may apply only tangentially to the wire Yagi's highly reactive loads, and power losses of unknown magnitude could be present and go undetected. The success of the QRP operations, noted above, could imply that tuner-associated power losses, even in the "wrong" tuner, are likely to be low. Still, use of a well-designed balanced tuner might yield further performance improvements in the multiband wire Yagi.

REFERENCES AND NOTES

[1] R. D. Straw, Ed., *The ARRL Antenna Book*, 17th Edition (Newington: ARRL 1994); 19th Edition (Newington: ARRL 2000). The feed-point and switch box relay-control circuits were taken, with only minor modifications, from descriptions in Chapter 8.

[2] *EZNEC-2* and *EZNEC v.3.0* are available from Roy Lewallen, PO Box 6658, Beaverton, OR 97007.

[3] The optimized standard Yagi is an *EZNEC* file derived from the *YA* file 240-20.YAG, designed by R. D. Straw and included with the *YA* (Yagi Analyzer) program of Brian Beezley in *The ARRL Antenna Book*, 17th Edition.

[4] J. Van der Ryd, "VE3CYC's Wire Beam," *73*, June 1992, pp 16 *et seq.*

[5] R. P. Haviland, "Insulated Antennas," *Communications Quarterly*, Winter 1993, pp 75-79.

[6] J. D. Heys, *Practical Wire Antennas* (RSGB: 1989) pp 19-20.

[7] L. B. Cebik, "Modeling and Understanding Small Beams: Part 3. The EDZ Family of Antennas," *Communications Quarterly*, Fall 1995, pp 53-65.

[8] J. Kuecken, "Skywave Antenna Measurements," *The ARRL Antenna Compendium, Vol 6* (Newington: ARRL, 1999) pp 57-62.

[9] *TL* (Transmission Line), written by R. D. Straw, included in *The ARRL Antenna Book*, 17th Edition. *TLW* (Transmission Line for Windows), also written by R. D. Straw, is included in *The ARRL Antenna Book*, 19th Edition. See also: R. D. Straw, "A Beginner's Guide to Transmission-Line and Antenna-Tuner Modeling," *QST*, May 2001, pp 34-37.

[10] W. Stewart, "Balanced Transmission Lines in Current Amateur Practice," *The ARRL Antenna Compendium, Vol 6* (Newington: ARRL, 1999) pp 174-178.

[11] R. W. Lewallen, "Baluns: What They Do and How They Do It," *The ARRL Antenna Compendium, Vol 1* (Newington: ARRL, 1985) pp 157-164.

[12] C. A. Lofgren, "Beyond the Z-match: The IBZ Coupler," *Communications Quarterly*, Winter 1995, pp 23-32.

[13] J. R. Buchanan, "A Delicate Balance: Building a Balanced Antenna Tuner for 160, 80, 40, and 20 Meters," *CQ*, August 1999, pp 24-35.

[14] A. A. Roehm, "Some Additional Aspects of the Balun Problem,, *The ARRL Antenna Compendium, Vol 2* (Newington: ARRL, 1989) pp 172-174.

A 10 Through 80-Meter Ground Plane/Vertical Antenna: A Result of New Technology

By Ralph Crumrine, NØKC
1621 E Sunvale Dr
Olathe, KS 66062-2108
e-mail: **CrumrineRJ@aol.com**

CAD software, a fast computer and a novel capacitor design result in a complex multiband antenna structure—on the first try!

I needed a fresh approach to an antenna to go along with my renewed interest in ham radio. Buy or build? Commercial vertical antennas seemed to be common these days, but in one way or another they missed the mark. What new technology could I bring to bear on antenna design and what type of antenna should it be?

Nearly 50 years ago I had built a 40-meter vertical ground plane antenna out of beer cans, a popular thing to do at the time. For a spate of activity 20 years ago I had hung out some dipoles from rooftop to trees. All these simple structures had the disadvantage of single-band operation or high takeoff angles for low dipoles.

What was desired was an antenna that was multiband, with full bandwidth on each band. Electrical efficiency was of prime importance. I ruled out the use of lossy and overly complex matching networks, lossy coaxial tuning stubs, ferrite-cored transformers or resistors.

Because of suburban restrictions, towers and beams were out of the question. Since that old 40-meter beer-can vertical ground plane had worked wonderfully well years ago, I settled quickly on a ground plane and/or vertical as the prototype structure around which to design the new antenna. Furthermore, I figured a ground plane has a built-in maintenance-free antenna rotator!

Antenna Design

Antenna CAD tools[1,2] have been available for some time but only the recent availability of ultra-fast computers has made the application of that software really practical for complex designs. The design job could be done. The question was: How accurately?

If the results of the CAD design called for component values that weren't commercially available how would that be handled? The coils for inductors can be shaped to any value. Capacitors are another thing.

Binary adjustment of small-signal chip capacitors is a staple in the microwave receiver industry. Taking a cue from these parts I decided to take on as a side project the development of a binary-adjustable, printed-circuit capacitor along those lines. With such a capacitor, I could create whatever value came out of the computer design. Having a continuum of capacitor and inductor values allowed me both degrees of freedom in the design of an LC parallel circuit—both center frequency and impedance level. See sidebar *Making a High-Voltage Fixed Capacitor*.

Achieving full bandwidth in an efficient manner for each band was one design goal. However, after many months of design, plus trial and error at the computer keyboard, I determined that I couldn't reach this goal for all bands from 10 through 80 meters. So I discarded the so-called WARC bands: 12, 17 and 30 meters. An antenna for those bands would have to be a follow-on project. Further, I decided to concentrate on the 10 through 40-meter bands in the form of a ground-plane antenna and then merge this into the mounting base to produce an 80-meter vertical antenna that used conventional on-ground radials. More on that later.

I started the design by establishing a reasonable mechanical size for the antenna. Since tubing comes in 12-foot lengths, I made the vertical sections, VS1, VS2 and VS3 (see schematic drawing in **Fig 1**) out of two telescoping sections of tubing. I also made each radial, RDL1 through RDL4, from 12-foot sections of smaller-diameter tubing. I found that an advantage of a large-radius radial system for the antenna is design stability. If I paid careful attention to mechanical dimensions and accurate implementation of electrical parts from the computer design, my goal was that the antenna would perform to specifications without any adjustment.

I determined coverage on the 20 and 40-meter bands on the prototype antenna structure using an LC tank circuit (L1-C1 in Fig 1). My first attempt was to tune this to the geometric center of the two bands, although after manipulation using the computer I ended up with a parallel resonance at 10.93 MHz. I placed the tank at the approximate midpoint of the vertical element. At frequencies below LC resonance, the circuit looks inductive, stretching the length of the antenna to resonate on 40 meters. Above the LC resonant frequency, the tank circuit is a capacitive reactance, which shortens the effective antenna length to make it resonant on 20 meters. One advantage to this approach is that the LC tank circuit is not operated at resonance on any band, and hence has lower voltages across it for all bands.

I defined the part of the antenna structure

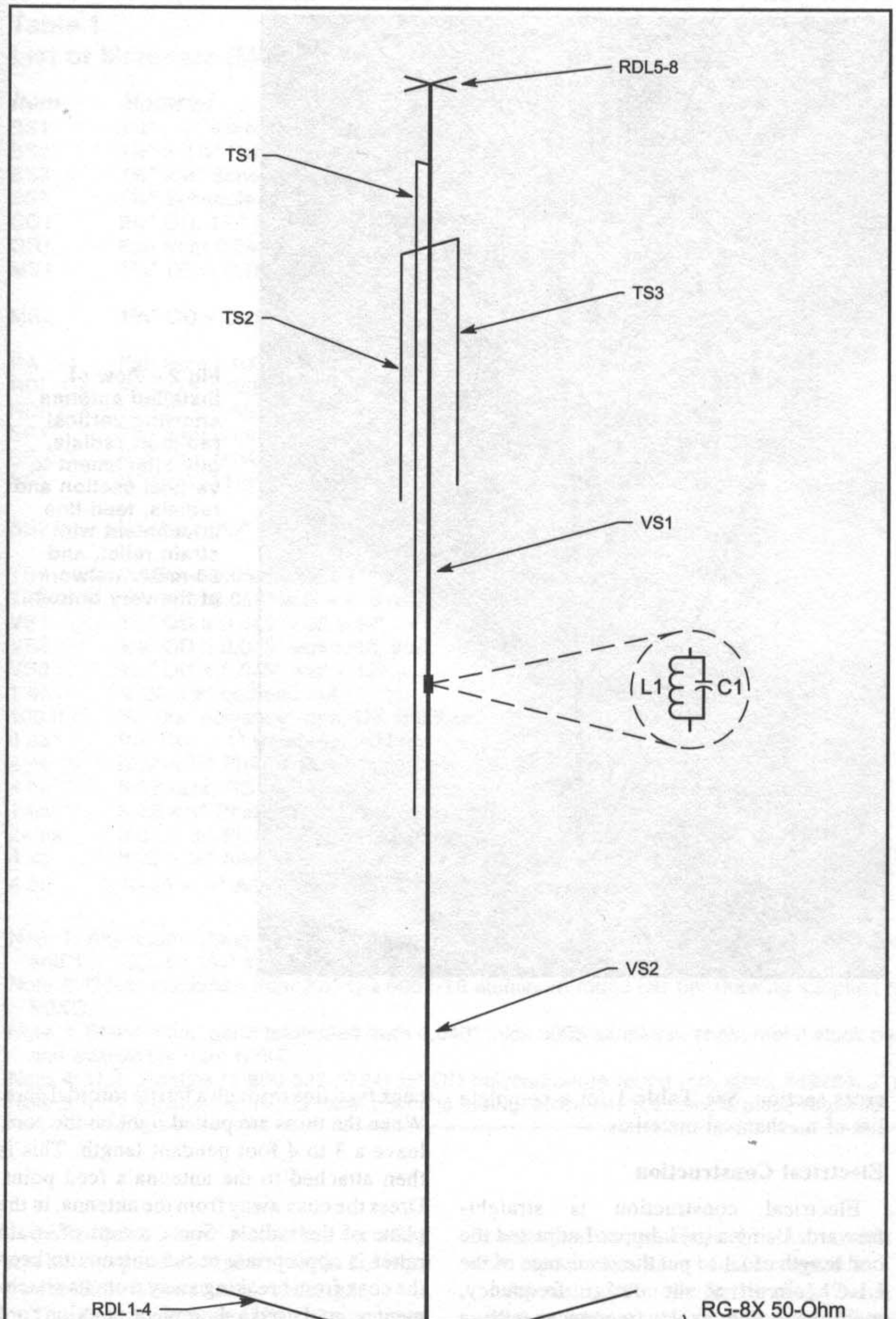

Fig 1—Schematic representation of 10 through 40-meter ground-plane antenna, with 80-meter capability.

that functions as a 15-meter antenna by mounting a ¼-wave 15-meter transmission line stub (TS1 in Fig 1) on the main vertical element, open-circuited at the bottom. Since a ¼-wave stub shorted at one end will be an infinite impedance at the open end, the resulting high impedance isolates the upper part of the overall antenna structure for operation on 15 meters.

The full length of the antenna structure is approximately two ½-wavelengths on 10 meters. To adjust the resonant length to exactly 10 meters and to effect an impedance transformation at the feed point, I added two approximately ⅛-wave-long stubs TS2 and TS3 in parallel, as shown in Fig 1. Think of this as a very broad stub that brackets the center section of the antenna.

All of these pieces of a multiband antenna interact with each another, so this is where the power of the computer comes into play. After many computer design trials (several weeks or more), I established final locations, component values and mechanical dimensions for all of the parts. Finally, to allow another degree of freedom in computer optimizing the design, I added a top hat (RDL5 through 8).

The feed point is at the junction of the radials and the vertical radiator. I ran several computer studies to investigate bandwidth. First, I examined bandwidth as a function of the diameter of the antenna parts. I fixed the main vertical section at 1.5 inches in diameter because going to a larger diameter produced very little improvement in bandwidth. Likewise, I studied how the number of radials affected bandwidth. There is a nice improvement in bandwidth between three and four radials, but beyond four radials the improvement in bandwidth becomes negligible.

I optimized the antenna mounted with its base eight feet high. The antenna unit is insulated from the mounting base just below the radials with a phenolic tube at the bottom of VS3 in Fig 1. With the addition of two parallel LC networks in series, just below the radials and across the insulating gap between the antenna and the mounting base, the structure becomes a loaded 80-meter vertical antenna. This requires a traditional ground-mounted radial system[3,4] for 80 meters. The installation of the network for 80 meters has a small effect on the 40-meter bandwidth and no noticeable effect on any of the higher bands.

The eight-foot base mounting height is not an accident. Besides being a good dimension to accommodate the 80-meter band, it allows you to walk around the yard, mow or garden under the antenna without getting poked in the eye by a radial.

Mechanical Design and Construction

I made the vertical sections, VS1, VS2

and VS3, from 1½-inch OD aluminum tubing. The radials, RDL1 through 4, are 12-foot lengths of ½-inch OD aluminum tubing. The final assembly of the antenna is shown in the photo in **Fig 2**. The main vertical sections, VS1 and VS2, of the antenna are joined (insulated) with a 13-inch long section of 1$^3/_8$-inch OD thick-wall phenolic tubing, MS1. L1 and C1 are placed in parallel across this insulated gap. Again, see Fig 1. [Detailed engineering drawings for this antenna and *EZNEC* files are on the ARRLWeb site at **www.arrl.org/8608**—*Ed.*]

I tapped the phenolic tubing for 8-32 screws. The radials, RDL1 through 4, connect to the bottom vertical section, VS3, using a collar, CO1, I machined out of a section of aluminum round-bar stock. A 28-inch piece of phenolic tubing, MS2, passes through VS3 and joins this to the middle vertical section, VS2, at the top and the mounting base, BS1, at the bottom.

The bottom insulating section of the antenna, MS2, fits into the base mount, BS1, which is a seven-foot section of 1¼-inch Schedule-40 galvanized pipe. The bottom end of this pipe has a 1¼ to 1½-inch reducer, plus a six-inch section of 1½-inch Schedule 40 pipe. I attached a floor flange, BS4, to the bottom of the 1½-inch pipe.

This mounting arrangement requires two persons to raise the antenna; one to hold the antenna erect and one to bolt up the flange. If you were to weld a hinge to the bottom of the mounting base instead of the floor flange, then erection could probably be done by one person.

The antenna is designed to be guyed, using four $^1/_8$-inch OD nylon polyester cords attached to a guy ring, GR1, just below the midpoint of the vertical section. Since the radials are long and flexible, they require support along their length. The guy cords are thus secured to the radials at the point where they pass the radial on the way to the ground. The radial to guy-attaching bracket grasps the radial and has a hole large enough to permit a loop of guy rope to be passed through it. I placed a piece of wooden dowel in the loop and when the loop is pulled taut, the dowel is held firmly by the loop. This provides an adjustment to hold the radial horizontally and in the right location along the length of each guy rope. Again, see the photo in Fig 2.

The vertical sections of the stubs, TS1, TS2 and TS3, are made of $^3/_8$-inch OD aluminum tubing. They are spaced away from the center vertical section with ½-inch OD polycarbonate insulating rods and 0.040-inch aluminum brackets. The top hat, RDL5 through 8, is formed by crossed pieces of $^3/_8$-inch OD tubing. They are securely held in place by a 6-32 screw where the rods cross in the middle of the tubing cross section. See **Table 1** for a complete list of mechanical materials.

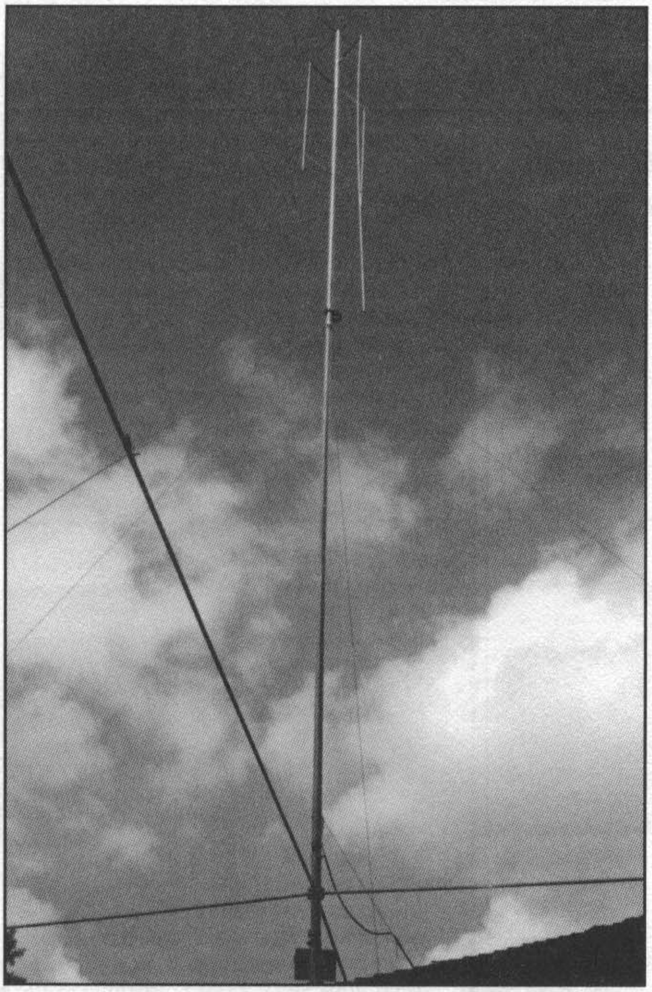

Fig 2—View of installed antenna showing vertical radiator, radials, guy attachment to vertical section and radials, feed-line attachment with strain relief, and 80-meter network at the very bottom.

Electrical Construction

Electrical construction is straightforward. Using a grid dipper I adjusted the coil length of L1 to put the resonance of the L1-C1 circuit at the design frequency, monitoring the exact frequency with a calibrated receiver. I tuned L1-C1 on the bench and then with a dial caliper measured the final length of the coil. I then installed the coil on the antenna, keeping the same measured length.

The 80-meter network is within easy reach from a stepladder. See **Fig 3**. After erection and testing of the 10 through 40-meter antenna, I put the 80-meter network in place. The procedure for adjusting the 80-meter network is identical to that described above, with the exception that there are two resonators involved in series, L2-C2 and L3-C3. Each LC section should be tuned separately. Mount L2 and L3 to minimize magnetic coupling between them.

The transmission-line balun, L4, is formed by threading 12 to 14 turns of the coax feed line through a ferrite toroidal core. When the turns are pulled tight on the core, leave a 3 to 4 foot pendant length. This is then attached to the antenna's feed point. Dress the coax away from the antenna, in the plane of the radials. Some means of strain relief is appropriate at the antenna to keep the coax from breaking away from its attachment point. I used a short piece of nylon cord wrapped in a self-tightening binding (Chinese finger trap) on the coax and tied to the antenna just above the feed point.

Electrical Components

As I mentioned earlier, the development of a new capacitor ran in parallel with the antenna design. The prototype of this antenna was installed with a new planar Teflon® capacitor of my own design wherever I required capacitors. A close-up picture of these capacitors is shown in **Fig 4**. They have the advantage of being adjustable over a ±15% range, in four-bit binary-coded increments. The prototype capacitors are similar in quality to a 850S ceramic "doorknob" capacitor, but in their present form can only handle about 500 to

Table 1
List of Materials (Mechanical)

Item	*Material*	*Function*	*Source/Remarks*
BS1	1¼" × 7' Schedule 40 steel pipe	Top base section	local hardware store
BS2	1½" × 1¼" Schedule 40 reducer	Top to mid section coupler	local hardware store
BS3	1½" × 6" Schedule 40 steel pipe	Lower base section	local hardware store
BS4	1½" Schedule 40 floor flange	Bottom base adapter	local hardware store
CO1	2½" OD, 1½" ID × 1½" long	Radial attaching collar	See note 2
GR1	Fab from 0.040" alum. sheet	Guy rope attaching ring	See note 3
MS1	1 3/8" OD × 0.75" ID × 13" phen. tube	Mid vertical mast section splicer	U.S. Plastics, Lima, Ohio See note 5.
MS2	1 3/8" OD × 0.75" ID × 28" phen. tube	Bottom vert. mast section splicer	U.S. Plastics, Lima, Ohio See note 5.
RA 1-4	Fab from 0.040" alum. sheet	Radial to guy attaching bracket	See note 3
RDL 1-4	½" OD × 0.058" wall × 12'	Radials (4 total)	See note 1
RDL 5-8	3/8" OD × 0.058" wall × 9¾"	Top hat (4 radials from 2 pcs)	See note 1
SP1	Fab from 0.040" alum. sheet	15 Meter stub bracket	See note 3
SP 2-3	Fab from 0.040" alum. sheet	10 Meter stub bracket	See note 3
SS1	½" OD × 11 3/8" Polycarb. rod	15 Meter stub spacer	U.S. Plastics, Lima, Ohio See note 4.
SS2	½" OD × 9 5/8" Polycarb rod	10 Meter stub spacer	U.S. Plastics, Lima, Ohio See note 4
TS1	3/8" OD × 0.058" wall × 11' 4 5/8"	15 Meter tuning stub	See note 1
TS2-3	3/8" OD × 0.058" wall × 4' 8 3/4"	10 Meter tuning stub	See note 1
VS1	1½" OD × 0.049" wall × 12'	Top vertical section	See note 1
VS2	1½" OD × 0.049" wall × 10' 9 7/8"	Middle vert. section	See note 1
VS3	1½" OD × 0.049" wall × 12"	Bottom vert. section	See note 1
1 ea	¼-20 × 2" bolt and nut	Base insulator insert limit	local hardware store
100 ft	1/8" Dia. polyester rope, UV stabilized		local hardware store
4 ea	5/16" Dia. × 1" wooden dowel rod	Guy rope adjusters (RDL1-4)	local hardware store
4 ea	6-32 × ½" Phillips Pan head screw, SS	Radial bracket attachment	local hardware store
4 ea	6-32 nuts, SS	Radial bracket attachment	local hardware store
1 ea	6-32 × 1" Phillips Pan Head screw, SS	Top hat assembly	local hardware store
24 ea	8-32 × ½" Phillips Pan Head screw, SS	Vertical mast assembly	local hardware store
4 ea	8-32 × ½" Allen head set screw, SS	Radial to collar attaching	local hardware store
4 ea	10-24 × ½" Allen head set screw, SS	Collar to mast attaching	local hardware store

Note 1: Aluminum tubing from local distributor or Texas Towers (1-800-272-3467). Note that Texas Towers stock is 0.058" wall thickness and 1 1/2" OD, so 1 3/8" insulating splicer may be a tight fit.
Note 2: Collar machined from 2½" OD 6061-T6 aluminum round bar per drawing supplied here or inquire about price and availability from N0KC.
Note 3: Sheet metal parts fabricated from 0.040" thick 3003 aluminum sheet metal stock per drawings supplied here or inquire about price and availability from N0KC.
Note 4: U.S. Plastics (1-800-537-9724) ½" OD polycarbonate round rod, stock #43284; 2' minimum order
Note 5: U.S. Plastics ¾" ID 5/16" wall phenolic tubing, stock #47106; single piece required

700 W of peak power. Not so bad for a first try, but not good enough to handle the legal power limit without some redesign.

The experimenter building this antenna can choose between the Teflon® capacitors I used (which are available from me) or 850S ceramic doorknob capacitors, available from RF Parts Co (1-800-RF-PARTS) or Fair Radio (1-419-223-2196).

The fixed values and tolerances of the commercial doorknob capacitors will likely result in some minor adjustments to your installed antenna. To reproduce the results obtained here—and to accommodate any changes desired, such as a greatly different mounting elevation—you should have an adjustable capacitor and a capacitance meter. Many modern digital multi-meters have a capacitance measuring range that can measure to a tolerance of 1%. Note that the capacitance values given in **Table 2** are actual values for the capacitor component itself—that is, after stray capacitances have been accounted for.

I determined that the ferrite choke balun ought to have a value of at least 50 to 100 μH of inductance and should be located about three feet away from the feed point. The requirement is satisfied with 12 to 14 turns of RG-8X transmission line wound through a FT-240-43 core. These turns can be about 1¾ inches in diameter on the core; not so tight that they distort the impedance of the transmission line and not so long that they waste transmission-line length.

I designed the coils using software provided by G4FGQ.[5] Results correlated well—except for predicted stray capacitance—with design information provided in the book *Reference Data for Radio Engineers*.[6] I deemed coil Qs in excess of 400 to be satisfactory. The Q of the coil is preserved by side mounting rather than coaxial mounting.

Electrical Performance—Computed and Measured

I compared the calculated gains and elevation patterns for the new design to standard ground-plane antennas (a vertical antenna for 80 meters). My antenna has a little less gain, –2.80 dBi on 80 meters compared to a full-sized standard vertical, but at 20 meters it is a tie and at 15 and 10 meters there is a small advantage in gain over the reference ground plane antenna. Elevation (takeoff) angles are nearly identical to the standard antennas.

One of the goals of this project was to see just how accurately the software could model this type of antenna. The results presented here are for the prototype as constructed and installed using the computed component values and dimensions without adjustments. The antenna has measured feed-point SWRs shown in **Fig 5**. I made

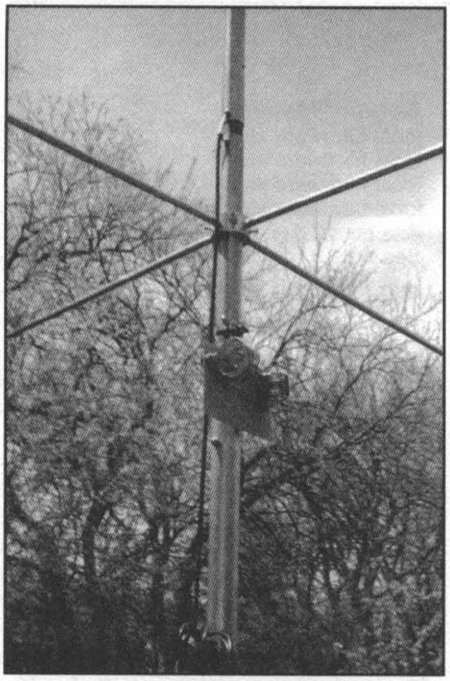

Fig 3—View of the top of the base-mounting section and antenna base, showing the 80-meter network.

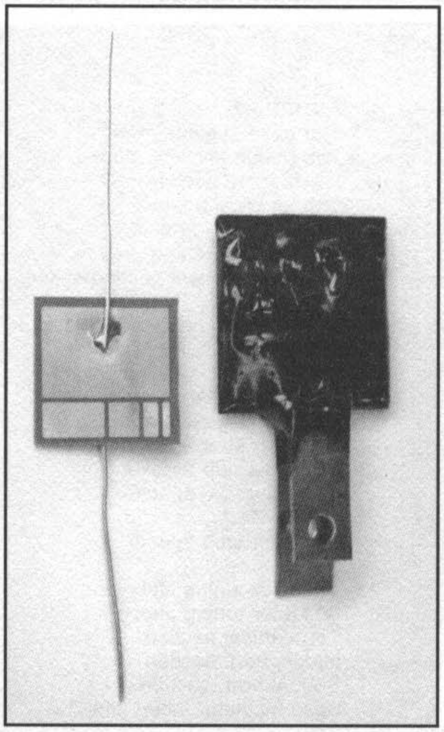

Fig 4—Power planar Teflon capacitors. Shown here is an uncoated substrate with test leads connected and a finished capacitor with heavy-duty, heat-dissipating copper strap leads and epoxy coating. Note the binary-sized capacitive sections that can be jumpered to the main area for adjustment.

these SWR measurements at the transmitter end of an 85-foot, RG-8X feed line for the prototype antenna. I made small design corrections to center the 15 and 10-meter bands in the next-generation hardware—that is, the hardware described in this article.

The 80-meter VSWR curve, while higher than desired, is acceptable because it is within the reach of the antenna tuner of the Kenwood TS440S-AT transceiver I use. Also a worst case SWR of 4:1 is within the tuning range of a well-designed linear amplifier with a Pi-L output network. An analysis[9] of the RG-8X coax shows the worst case heat rise to be within acceptable limits for full legal power when operating CW or SSB, and I computed losses in the cable to be only 0.4 dB. To some extent, the 80-meter SWR values are influenced by the ground radial system, of course.

You may want to mount this antenna at an elevation other than eight feet. Several computer runs indicate that center frequencies will change about ± 1% as the antenna base elevation is varied from one to 15 feet. This effect will be felt most on the 40-meter band. Either you will have to recalculate the principal elements of the antenna or else use some trial-and-error experimentation to accommodate the frequency shift at the extremes of base elevations mentioned here. If the base elevation is changed, you will have to recalculate the 80-meter network for operation on that band.

RF Exposure Considerations

With the current FCC rules regarding RF energy exposure[7,8] the design of a new antenna isn't complete without an investigation of near-electromagnetic fields to establish safe distances from the antenna. Computer modeling is an acceptable method under the rules. I calculated the closest-approach distance at a 1500-W level at 14 feet from the center of the antenna. At 100 W, the distance is 5 feet.

Table 2
List of Materials (Electrical)

Item	*Description*	*Source/Remarks*
C1	72.5 pF; HF power capacitor	See text
L1	2.80 µH; 8 T, #10AWG Cu wire, 2.0" Dia., 1.50" long	Hand fab, note 1,2
L4	60 µH; 12 T, RG8/X on Amidon FT-240-43 core	Loose 1¾" Dia. turns
The following parts are required only if operation on 80M is desired:		
C2	218 pF; HF power capacitor	See text
C3	85.0 pF; HF power capacitor. See text	
L2	2.5 µH; 8 T, #10AWG Cu wire, 2.0" Dia., 1.75" long	Hand fab, note 1,2
L3	1.48 µH; 7 T, #10AWG Cu wire, 1.45" Dia, 1.13" long	Hand fab, note 1,2
4ea	8-32 × ½ Phillips Pan head screws, SS	Local hardware store
4ea	8-32 Nuts, SS	Local hardware store
12ea	8-32 Washers, SS	Local hardware store
1ea	4.5" × 6.5" Phenolic vectorboard	Digi-Key #V1043-ND; Tel. 1-800-344-4539
2ea	1½" Radiator hose clamp, SS	Auto parts store

Note 1: Bend the coil leads at a sharp right angle from the coil such that the leads lie in a plane under the coil body. In one lead form an eyelet that will accept an 8-32 screw. Form an elongated eyelet in the other coil lead that accommodates the appropriate center to center mounting spacing and allows some inductance adjustment.

Note 2: Final adjustment of L1, L2 and L3 is done with a Grid Dip meter. With capacitors C1, C2 and C3 in hand, adjust the length of each inductor to resonate with its respective capacitor to a resonance frequency as shown:

L1C1	10.93 MHz
L2C2	6.82 MHz
L3C3	14.20 MHz

Monitor the Grid Dip meter signal with a calibrated receiver to obtain the necessary frequency accuracy for these adjustments.

Making a High-Voltage Fixed Capacitor

PC boards made with PTFE insulation (commonly known as Teflon) can be used to make high-voltage, high RF-current capacitors that have some very desirable characteristics. While Teflon doesn't have a very high dielectric constant, it can withstand high temperatures (think of Teflon-coated skillets), doesn't absorb moisture and is stable under UV. Furthermore, it has very low dielectric losses, even at microwave frequencies, and it can withstand high voltages.

The general expression for a parallel-plate capacitor is given by:

$$C = 0.225\,\varepsilon_r \left[(N-1)\,A / t\right] \qquad \text{Eq 1}$$

where N is 2 (representing the top and bottom surfaces of PC-board plate area) and the dielectric constant ε_r for Teflon is 2.1. A is the area in one side of the plate in square inches and t is the thickness of the dielectric between the plates in inches. Here, we'll use a 5 mil PCB substrate thickness and rearrange Eq 1 to calculate the area for a desired amount of capacitance.

$$A = 0.01058 \text{ square inches per pF} \qquad \text{Eq 2}$$

Note that the shape of the "plate" can be anything—a square, a rectangle, a circle, etc. For 100 pF, we need 1.058 square inches of copper, minus a 1% to 3% area reduction depending on the area-to-perimeter ratio to allow for fringing effects. A practical limit to this technique is a capacitor on the order of 300 pF, or about 1¾ inches on a side.

In Fig 4 you can see a capacitor made with "binary" adjustability to give a total of 15 binary weighted possible adjustments, with a 2-pF smallest "bit" of extra capacitance. I solder heavy copper straps (20 mils thick by ³/₈-inch wide) onto the PCB top and bottom. These straps conduct heat from the Teflon dielectric and also make a low-inductance connection. Remember, a square inch of Teflon might be asked to dissipate 3 or 4 W of RF power due to its dissipation factor (rated at 0.00015) for typical values of RF current in these kinds of applications!

Fig 4 also shows a capacitor after tweaking for a desired level of capacitance. It has been coated with epoxy to seal it against the weather. These capacitors broke down around the edges at about 1200 V rms of RF, so they are safe at applications up to the same sorts of levels that 850S-type doorknob capacitors can handle. Sometime in the near future I expect to improve the capacitor design and I will write an article about that. Stay tuned!

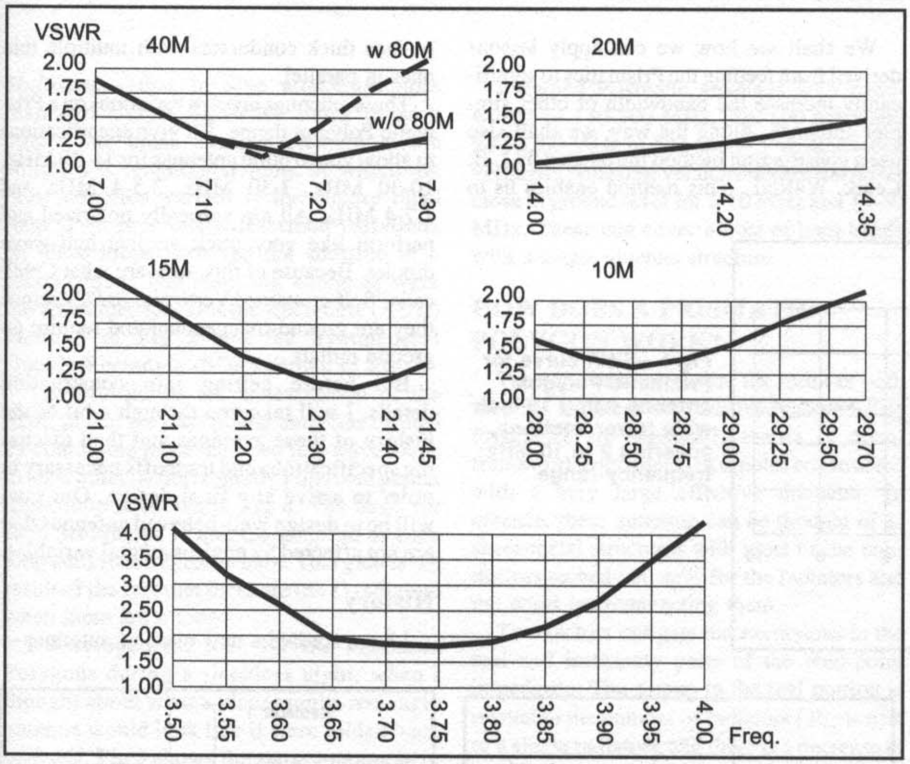

Fig 5—SWR measurement for the 80 through 10-meter bands.

Summary

This antenna resulted in worst-case center frequency errors of 1% or less for the 10 and 15-meter bands when comparing installed with computed results. With the exception of the 80-meter band, the SWRs are close to or better than 2:1 across the full bandwidth of each amateur band, 10 through 40 meters. My prototype antenna went up and has stayed up, without changes, after being built to the numbers crunched by the computer. As a computer exercise, I only had to make slight design adjustments to more perfectly center the SWR across the bands. This is shown in *EZNEC* file 1040GPD3.EZ.

I have used this antenna now for several years. It has withstood the "ice storm of the century" here in Kansas City. I have worked many DX contacts, CW and SSB, and have achieved all-mode DXCC. The local ground-wave tests that I've made indicated a remarkable advantage over a dipole, as expected.

References and Notes

[1] *EZNEC* software, Roy Lewallen, W7EL, PO Box 6658, Beaverton, OR 97007, **http://eznec.com/**.

[2] *NEC-Win Basic, NEC-Win Plus* antenna CAD software, Nittany Scientific, 1733 West 12600 South, Suite 420, Riverton, UT 84065, Phone/Fax: (801) 446-1426, **http://www.nittany-scientific.com/**.

[3] Rudy Severns, N6LF, "Verticals, Ground Systems and Some History," *QST*, Jul 2000, pp 38-44.

[4] R.J. Edwards, G4FGQ, Radial Systems CAD shareware, **http://www.btinternet.com/~g4fgq.regp/**.

[5] R.J. Edwards, G4FGQ, Solenoid Inductor CAD shareware, **http://www.btinternet.com/~g4fgq.regp/**.

[6] *Reference Data for Radio Engineers, Fifth Edition*, Howard W. Sams & Co, Inc., 1974.

[7] Ed Hare, W1RFI, "The FCC's New RF-Exposure Regulations," *QST*, Jan 1997, **http://www.arrl.org/news/rfsafety/qst9710.html**.

[8] Ed Hare, W1RFI, "FCC RF-Exposure—the Station Evaluation,", *QST*, Jan 1998, **http://www.arrl.org/news/rfsafety/eval/index.html**.

[9] R. J. Edwards, G4FGQ, Coaxial Ratings CAD software, **http://www.btinternet.com/~g4fgq.regp/**.

A MEMORIAL

This article is dedicated to the memory of Maurice "Buz" Baer, W0JAS. We called him "Uncle Wojazz." Buz was devoted to promoting Amateur Radio through teaching the art and science of radio, by construction and operation. His professional life was devoted to teaching. He was my friend and mentor.

The Prismatic Polygon Family of Very Wideband Antennas

By Dan Handelsman, N2DT
16 Attitash
Chappaqua, NY 10514

Introduction

In this article I shall introduce a new class of antennas, called the "Prismatic Polygons" ("Prismatics" or "Ps" for short), whose main feature is *very* wide bandwidth. **Fig 1** shows what can be accomplished by a Prismatic designed to cover 2-10 MHz.

The wideband capability of Prismatic Polygons is the result of two distinct, but convergent, design processes. These are feed-line coupling and the three-dimensional (3D) arrangement of the radiators. I shall show how experimental results have validated the design data obtained by *NEC* computer modeling.

N2DT reveals a new class of wideband antennas.

We shall see how we can apply lessons derived from feeding the Prismatics to significantly increase the bandwidth of other simpler antennas. Along the way, we shall also use a construction method introduced by L.B. Cebik, W4RNL. This method enables us to replace thick conductors with multiple thin ones in parallel.

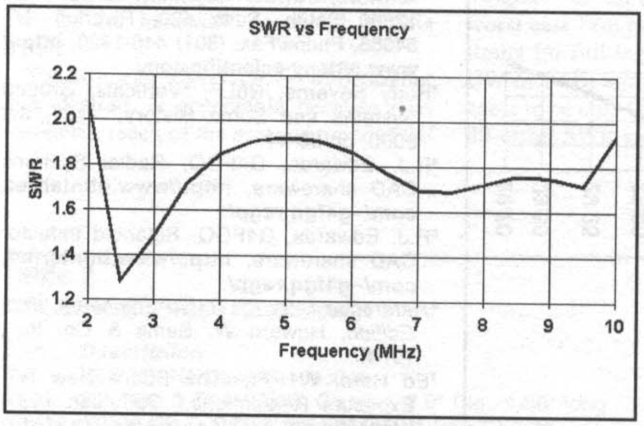

Fig 1—SWR curve for Prismatic Polygon antenna using 18-inch wide tower sections, covering 2 to 10 MHz frequency range.

These antennas involve variations on a Prismatic Polygon theme. I'll give specifications to allow you to build antennas for 14-30 MHz, 10-30 MHz, 7-30 MHz, 3.5-4 MHz and 1.7-4 MHz. All are vertically polarized and perform like very thick vertical half-wave dipoles. Because of this, they are what Cebik calls "Self-contained Verticals" or *SCVs* since they are ground-independent and require no ground radials.

But before getting into construction details, I will take you through a bit of the history of these antennas and then discuss the specifications and tradeoffs necessary in order to arrive at a final design. Our goal will be to design well-behaved antennas that are not affected by environmental variables.

History

I have studied a new class of antennas—

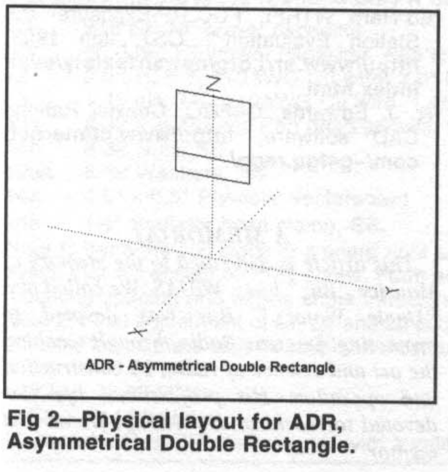

Fig 2—Physical layout for ADR, Asymmetrical Double Rectangle.

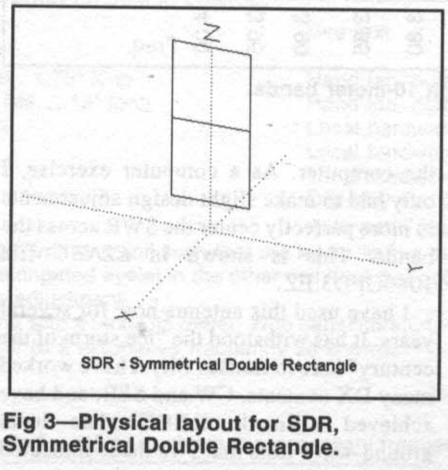

Fig 3—Physical layout for SDR, Symmetrical Double Rectangle.

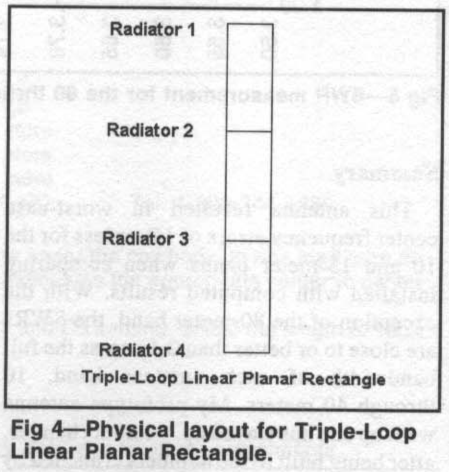

Fig 4—Physical layout for Triple-Loop Linear Planar Rectangle.

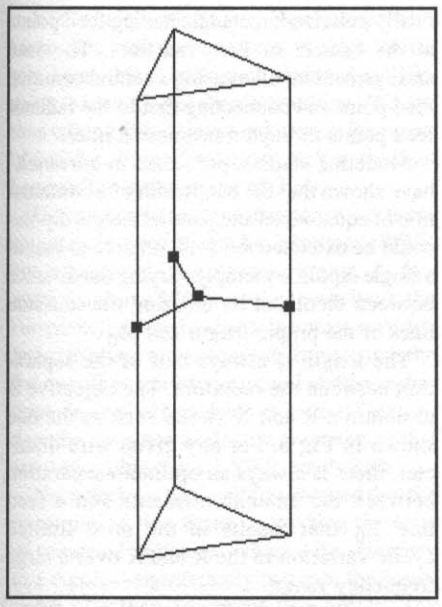

Fig 5—Physical layout for Prismatic Polygon, which is Fig 4 folded back onto itself. The feed point is the small square in the center of the structure.

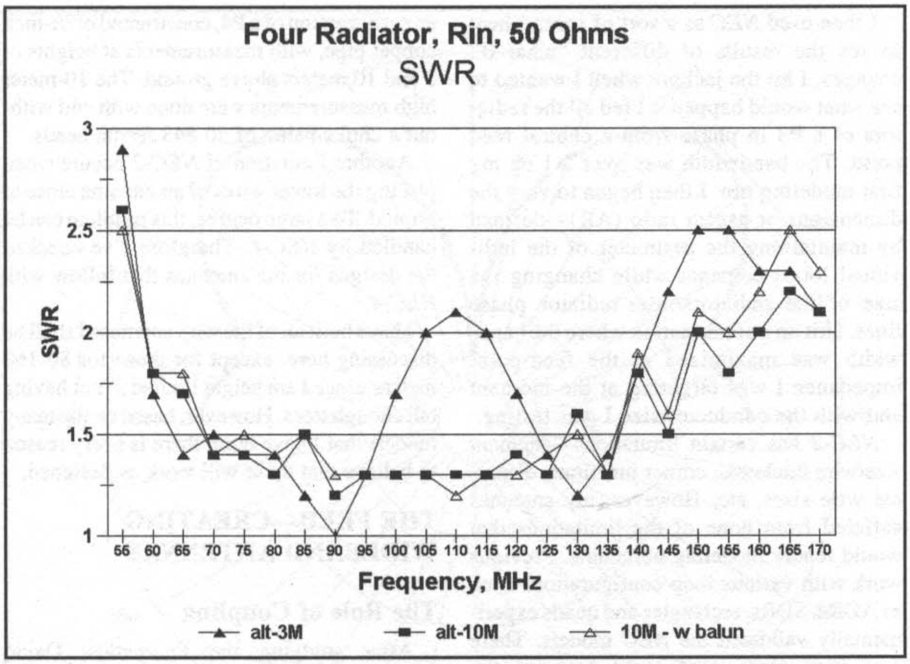

Fig 6—Typical measured SWR curves for Prismatic Polygon shown in Fig 5.

Multiloops—that involve attaching more than two simple full-wave loops to each other. The basic starting element is the simple 1-λ rectangular loop, of which the most common variant is the square quad loop. Two previously described variations on these loops involved the addition of a second loop. The resulting antennas were the Asymmetrical Double Rectangle (ADR) pictured in **Fig 2** and the Symmetrical Double Rectangle (SDR) shown in **Fig 3**.

The Multiloops are an extension of the SDR, in that they are planar antennas formed by conjoining more than two full-wave loops to each other. A horizontally polarized planar triple-loop is shown in **Fig 4**. The basis for such Multiloops is that the addition of each loop adds to the antenna gain. This gain is the result of the fact that there are (n+1) radiators when there are n loops.

I developed the idea for the Prismatic Polygons during a sleepless night, when I thought about what a planar multi-rectangle antenna would look like if were folded back on itself. **Fig 5** shows the same antenna as in Fig 4 when folded back on itself. David Jefferies, PhD, G6GPR, coined the name "Prismatic Triangle" when he was struck by its shape. We shall refer to such a three-sided Prismatic as a "P3" from now on. I then went on to study Prismatic Squares (P4s), Pentagons (P5s), Hexagons (P6s) ... Dodecahedrons (P12s).

I found that Prismatic Polygons have some very unusual properties, once I had arrived at a suitable feed arrangement. The P3 has a 2:1 SWR bandwidth in free-space that approaches 3:1.

I studied Prismatic antennas with bandwidths of 130-500 MHz, 200-800 MHz and 800-3200 MHz in free space. I've developed vertically polarized versions with lower wires close to ground level for 2-10 MHz and 10-50 MHz. These can cover a host of ham bands with a single antenna structure.

HOW DOES A PRISMATIC POLYGON WORK?

The wide bandwidths are the result of both their 3D structure and their feed method. The Prismatics are essentially matrix or open-framework equivalents of dipoles constructed with a very large effective diameter. In essence, these antennas can be thought of as sheet-metal structures with most of the conductors etched out, save for the radiators and the wires interconnecting them.

Two factors mitigate the excursions in the real and imaginary parts of the feed-point impedance: The stepup in the real portion is related to the number of radiators (R_{in} is n^2R of a single radiator), and there is a decrease in the stored magnetic energy (Q) by a factor of $1/n^2$. A more detailed discussion of the theory underlying these antennas can be found in "Plate Dipoles and Prismatics Revisited" at *antenneX*, Vol 61, Apr 2002, in Archive V.

The feed method described in this article is integral to the Prismatic's performance and enables feeding such large-diameter dipole structures properly. The length of the feed lines going from the feed point to the individual radiators and the feed-line Z_0 also mitigate the R and X excursion over bandwidths exceeding two octaves.

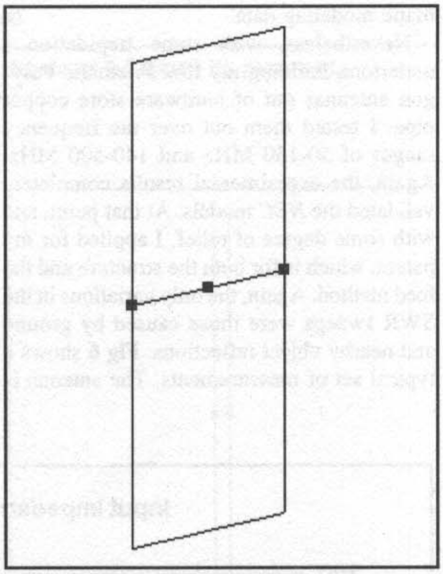

Fig 7—Simple vertically polarized rectangle, with feed points at the center of both radiators, with transmission lines going to the center common feed point.

The Role of *NEC* Modeling in Designing Prismatic Polygons

This class of antennas would never have seen the light of day had it not been for the computer modeling program *NEC-2*. When I imagined the planar triple full-wave loop folded back on itself, I didn't have the slightest idea of what it would do. I was doing "mental doodling" with *NEC* when I noticed that it had a wider bandwidth than the original planar antenna.

I then used *NEC* as a sort of spreadsheet to see the results of different "what if" changes. I hit the jackpot when I wanted to see what would happen if I fed all the radiators of a P3 in phase from a central feed point. The bandwidth was over 2:1 on my first modeling run. I then began to vary the dimensions or aspect ratio (AR)—defined by maintaining the perimeter of the individual loops constant while changing the size of the radiators/inter-radiator phase lines. I hit on a combination where the bandwidth was maximized at the feed-point impedance I was targeting at the moment and with the conductor size I was testing.

NEC-2 has certain limitations—segment size/wire thickness, corner junctions, disparate wire sizes, etc. However, my antennas suffered from none of the limitations that would render modeling unreliable. Previous work with various loop configurations such as ADRs, SDRs, rectangles and quads experimentally validated the *NEC* models. There was very close conformity between the experimental results and the modeling data, so long as the antennas were over 2 λ above ground and far from metallic objects. So there was no reason to be suspicious of the Prismatic modeling data.

Nevertheless, with some trepidation I undertook building my first Prismatic Polygon antennas out of hardware store copper pipe. I tested them out over the frequency ranges of 50-150 MHz and 140-500 MHz. Again, the experimental results completely validated the *NEC* models. At that point, and with some degree of relief, I applied for my patent, which is for both the structure and the feed method. Again, the only variations in the SWR sweeps were those caused by ground and nearby object reflections. **Fig 6** shows a typical set of measurements. The antenna is an early version of a P4, constructed of $^1/_2$-inch copper pipe, with measurements at heights of 3 and 10 meters above ground. The 10-meter high measurements were done with and without a choke balun of 50 #43 ferrite beads.

Another limitation of *NEC-2* occurs when placing the lower wires of an antenna close to ground. To a large degree, this problem can be handled by *NEC-4*. Therefore I've checked the designs for the antennas that follow with *NEC-4*.[2]

I have built all of the wire antennas I shall be discussing here, except for those for 80-160 meters, since I am height limited in not having tall enough trees. However, based on the many models that I have built, there is every reason to believe that these will work as designed.

THE FEED—CREATING WIDEBAND ANTENNAS

The Role of Coupling

After studying the Prismatics, David Jefferies prompted me to study the feeding of simpler antennas in the same way. His previous experience revealed that, under certain circumstances, manipulating the coupling between parallel radiators by feeding them with common feed lines would result in wider SWR bandwidth.

The coupling between radiators is a function of two inter-related factors; the separation between them (which influences radiation or electromagnetic coupling), and the coupling due to the connection of the radiator ends to each other (as found in rectangular loops). The bandwidth is then enhanced by the impedance transformation arising from the common feed lines. The combined result for these three modalities is shown in **Fig 7**, which shows a simple planar structure. This is a simple, vertically polarized, rectangle having feed points at the centers of both radiators. The feed arrangement involves using a central common feed point and connecting that to the radiator feed points through transmission lines.

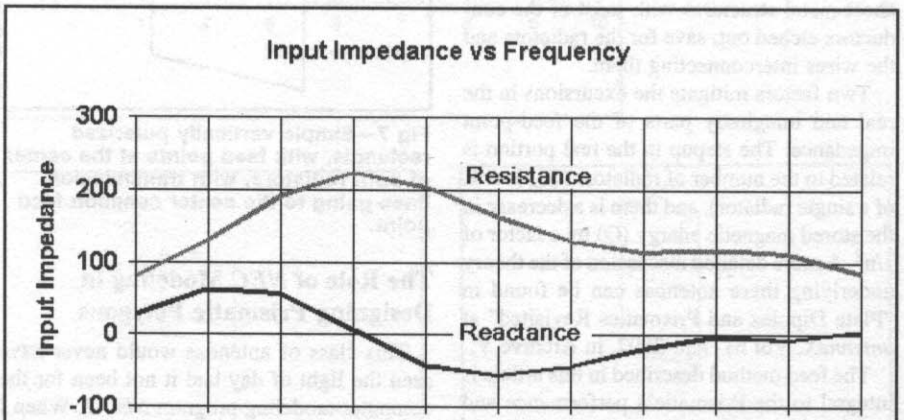

Fig 8—Frequency sweep for Prismatic Polygon, showing feed point resistance and reactance from 10-30 MHz. Note how the reactance in particular doesn't vary dramatically across this wide frequency range.

Modeling studies, published in *antenneX*[3] have shown that the bandwidth of a combination of equal-sized and parallel simple dipoles could be extended ten-fold, relative to that of a single dipole, by simply varying the distance between them and by utilizing transmission lines of the proper length and Z_0.

The length is always half of the separation between the radiators. The objective is to obtain a R and X sweep such as the one shown in **Fig 8**. For any given wire diameter, there is always an optimum separation between the antenna elements and a feed line Z_0 that results in the most limited cyclic variation in the R and X over a large frequency range.

Application of the Common-Feed Method to a Pair of Simple Wire Dipoles

As an example of what can be accomplished by such a simple feed technique, we can consider the case of two parallel dipoles constructed of 1-cm thick wire and designed for a frequency of 300 MHz. A single dipole has a bandwidth of 50 MHz or 17%.[4]

If we now take two similar dipoles, separate them by 0.15 λ and feed them with equal-length transmission lines with a Z_0 of 280 Ω, the bandwidth then becomes 440 MHz or 169%.[5] This is a ten-fold increase in bandwidth. For a host of different antennas I have studied, the optimum element separation is in the range of ± 0.15 λ.[6]

Application to Rectangular Loops

The simple rectangle in Fig 7 is fed in the same way as the two-dipole system. But, due to the additional coupling by the transmission-line wires connecting the ends of the two radiators—the horizontal wires forming the rectangle—the bandwidth is enhanced when compared to that of the parallel dipoles.[7] Of equal importance is the capacitive end-loading achieved with the wires orthogonal to the radiators. This significantly shortens the radiators and has little, if any, effect on gain.

Remember that a simple rectangle, such as a square or quad loop, can have a significantly wider SWR bandwidth than a dipole made of the same wire thickness. This is due to the fact that while the antenna is fed at only one radiator a current of almost equal phase and magnitude is induced in the opposite, unfed, parallel radiator. This occurs over a narrow range of frequencies—narrow by Prismatic standards but still sufficient to cover most ham bands. The equal current division and the phase relationships among the Prismatic Polygon radiators result in the wider BW.

NEC modeling led to my experiments with rectangles built with extremely thick radiators. I was able to build such antennas at VHF, using 2-inch (5 cm) diameter tubing. We are thus talking about wire thickness in the range of 0.025 λ. I found antennas such as this had bandwidths in the range of 70%.

Unfortunately, the performance of these antennas is limited not by impedance/SWR but rather by their radiation patterns. At frequencies above 45% over the lower limit, the current in the unfed radiator becomes very different in phase and magnitude from that in the fed one. This leads to profound endfire radiation—instead of broadside radiation. This renders the antennas useless at frequencies that are well within the 2:1 SWR bandwidth.

Nevertheless, these studies showed that the transmission line wires connecting the ends of truncated radiators—short with reference to a dipole—significantly increase the bandwidth of a loop compared to a dipole. The solution to the radiation pattern problem turned out to be simply feeding both the radiators in phase from a common central feed point. As I described above with the two parallel dipoles, this significantly widens the bandwidth of such a simple loop. Studies at UHF using relatively thick wires have revealed bandwidths approaching 3:1 for both 2:1 SWR and useful broadside gain and radiation patterns.

APPLICATIONS FOR THE AMATEUR RADIO COMMUNITY

Neither David Jefferies nor I have been able to find references in the professional engineering literature to this sort of feed-line coupling. Jefferies had attempted to promulgate a variation of it some years ago in antennas, but the design was co-opted by the British Defense Ministry and was never built. Apparently I had stumbled on the same solution when confronted with feeding the Prismatics. Jefferies feels that it as important to publicize the feed method as it is to publicize the novel antenna structure of the Prismatics.

The Basic Antenna Structure

As I mentioned earlier, the basic structure for all of the antennas I am discussing here is the full-wave loop. Because the perimeter is always nominally about 1 λ at the design frequency, there is a reciprocal relationship between the size of the radiators and the transmission-line wires orthogonal to them and connecting their ends.

With these vertically polarized antennas, the longer you make the radiators at any given frequency range, the narrower the inter-radiator separation has to be in order to maintain the same frequency bandwidth. I do not use the term "resonant frequency" with these antennas since there are multiple resonances

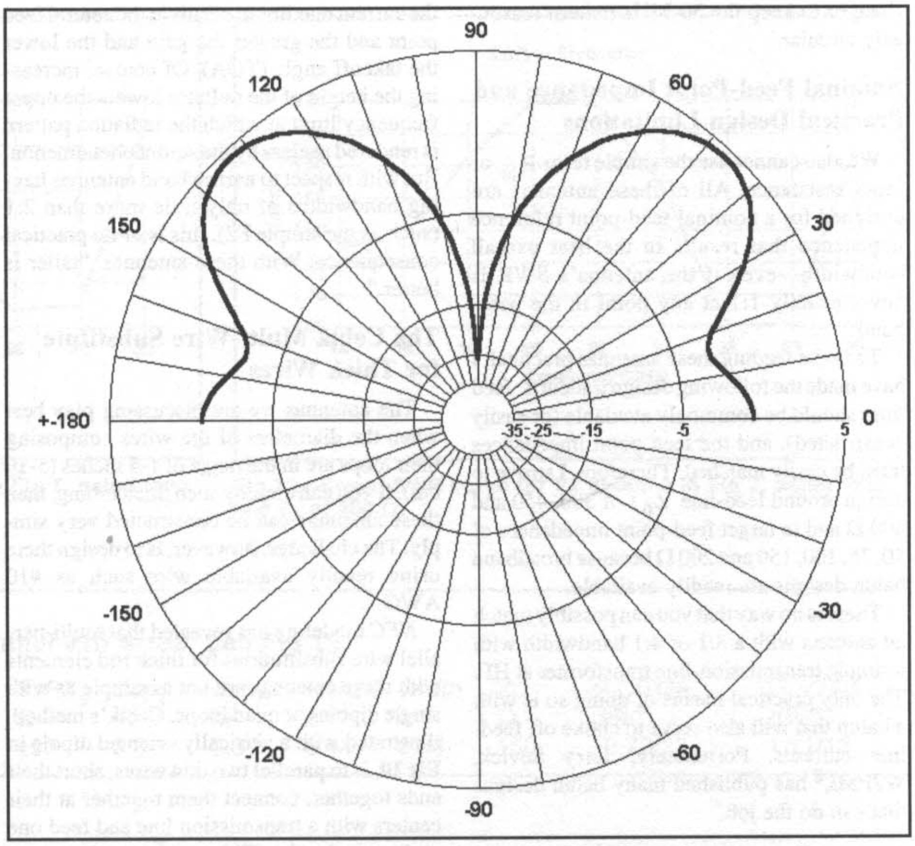

Fig 9—Elevation pattern distortion in a ½-λ dipole at 2.5 times its resonant frequency.

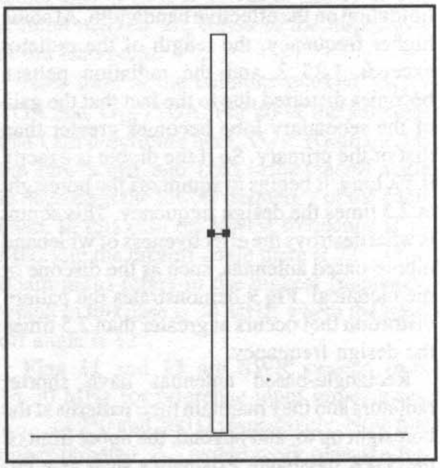

Fig 10—A vertically oriented dipole using the Cebik technique of two closely spaced, parallel thin wires, fed with a short feed line in the center.

with these structures. The goal is to achieve coverage over a very large frequency range.

Effects on Gain and Radiation Patterns

All of the antennas we shall discuss have additional gain compared to a single radiator, due to the "stacking" effect related to the separation of the radiators. Because of the relatively narrow spacing between the radiators, the gain increase is not as great as you might expect from antennas employing much wider separations, such as the quad or more extreme rectangles with even shorter radiators separated by much wider distances. Lessened gain is a tradeoff you must make for the greatly enhanced SWR bandwidth.

Since all of the antennas are "all-fed" arrays with feed lines going to the center of each radiator from a common feed point, the radiators are being force-fed currents of equal phase and magnitude. Even so, distortions of the radiation patterns can occur.

Taller radiators not only have more gain but due to the narrower separations between them they also yield more circular azimuth patterns. The radiator separation has its greatest effect on the azimuth pattern at the high frequency end of the passband and is particularly evident with the simplest antenna, the two-radiator rectangle, the P2. Circularity is never an issue at the low-frequency end of the passband.

Due to the planar arrangement of the two-radiator P2, it wants to radiate broadside at even minimal separations (in terms of λ). As we shall see later when we discuss this antenna further, we have to make some dimension changes to keep the 30-MHz pattern reasonably circular.

Nominal Feed-Point Impedance and Practical Design Limitations

We also cannot use the simple term R_{in} or input resistance. All of these antennas are designed for a nominal feed-point reference impedance that results in the best overall bandwidth—even if the antenna's SWR is never exactly 1:1 at any point in the passband.

To make feeding these antennas practical, I have made the following design tradeoffs: feed lines should be commonly available (or easily constructed), and the feed-point impedances must be easily matched. Therefore, I strove to design around feed-line Z_0 s of 300, 450 and 600 Ω and to target feed-point impedances of 50, 75, 100, 150 and 200 Ω because broadband balun designs are readily available.

There is no way that you can possibly match an antenna with a 3:1 or 4:1 bandwidth with a simple transmission-line transformer at HF. The only practical means of doing so is with a balun that will also serve to choke off feed-line currents. Fortunately, Jerry Sevick, W2FMI,[8] has published many balun designs that can do the job.

Design Tradeoffs and Radiation Patterns

As far as antennas composed of simple nominally 0.5 λ dipoles, there is a pattern limitation on the effective bandwidth. At some higher frequency, the length of the radiator exceeds 1.25 λ and the radiation pattern becomes distorted due to the fact that the gain of the secondary lobe becomes greater than that of the primary. So if the dipole is exactly 0.5 λ long, it begins to squint off the boresight at 2.5 times the design frequency. This squint is what destroys the effectiveness of wideband dipole-based antennas, such as the discone or the biconical. **Fig 9** demonstrates the pattern distortion that occurs at greater than 2.5 times the design frequency.

Rectangle-based antennas have shorter radiators and they maintain their patterns at the boresight up to, and beyond, the upper limit of the SWR passband. Prismatics such as a P4, with even shorter radiators and more compact structures, are able to radiate effectively at five times the lower SWR passband frequency.

An additional tradeoff occurs with respect to gain. With vertically polarized antennas, the taller the radiator, the higher above ground the current maximum occurs at the central feed point and the greater the gain and the lower the takeoff angle (TOA). Of course, increasing the height of the radiator lowers the upper frequency limit at which the radiation pattern is rendered useless by the squint phenomenon. But with respect to narrowband antennas having bandwidths of only little more than 2:1 (such as the simple P2), this is of no practical consequence. With these antennas, "taller is better."

The Cebik Multi-Wire Substitute for Thick Wires

The antennas we are discussing play best when the diameters of the wires composing their loops are in the range of 1-4 inches (5-10 cm). If you can employ such thick tubing, then these antennas can be constructed very simply. The challenge, however, is to design them using readily available wire such as #10 AWG.

NEC modeling has revealed that multi-parallel wire substitutions for thick rod elements with these antennas are not as simple as with single dipoles or quad loops. Cebik's method, illustrated with a vertically oriented dipole in **Fig 10**, is to parallel two thin wires, short their ends together, connect them together at their centers with a transmission line and feed one at the usual point. This can be made to perform identically to a single rod element made of thick wire. By identical performance, I mean that the distance between the wires can be varied such that the end-result is a single-rod equivalent having the same length, feed-point impedance and bandwidth.

The antennas in this paper derive part of their enhanced bandwidth from capacitive coupling to the ground by the wires that are parallel to and close to ground level. This coupling is affected by the diameter and spacing of the parallel thin-wires and is not at all electrically equivalent to the coupling between the radiators themselves.

Many modeling and experimental studies have shown that two parallel wires will not work well with the antennas we shall be constructing. We have to use three wires in parallel. However, the end results are worth the price:

- A two-radiator P2 antenna covering 14-30 MHz or 5 ham bands
- A three-radiator Prismatic Triangle (P3) covering 10-30 MHz
- A P4 (Prismatic Square) with a bandwidth of 7-30 MHz
- A P4 covering 1.7-4 MHz.

Wire Diameter

If we look again at Fig 1, we see that the bandwidth is 5:1 and the in-band SWR excursions are minimal. This is due to the fact that the antenna was designed around very thick tower sections for its radiators. The diameter of the radiators, more so than that of the orthogonal lines connecting them, determines the extremes of the bandwidth, as well as the degree of the R and X excursions within that bandwidth.

The design goal is to find the smallest wire diameter we can get away with that will still give us the bandwidth we need at both passband extremes, and that will prevent any mid-band SWR excursion from exceeding our 2:1 SWR limit. All of the solid-wire antennas we shall discuss have wire diameters that are 0.05 m (2 inches) or less.

A P2 FOR 14-30 MHZ

This antenna is a simple rectangle with two wire radiators. It is not a true Prismatic, but at Jefferies' suggestion I have adopted the misnomer of P2 for it—a "two-radiator Prismatic." This is because it is based on the same principles as the Prismatics; namely closely spaced equal and parallel radiators fed via transmission lines from a common feed point. It lacks the 3D structure of the true Prismatics but illustrates how a simple antenna can be made to cover a very wide bandwidth.

The Reference P2

This P2 is composed of single thick, 1-inch diameter, wires and is pictured in Fig 7. **Table 1** gives the design specifications.

We have to discuss how to interpret Table 1 and all of the other tables that follow. The first column, Peri., is the perimeter of the component rectangle(s) in meters. In other words, this P2 is a full-wave loop with a 19.5-meter perimeter. The columns Height and Width point toward the Aspect Ratio of the loop. Their sum is always 0.5 λ. For the P2 in Table 1, the overall physical height would be the Perimeter multiplied by the Height in λ, or 19.5 × 0.42 meters. The physical Width is 19.5 × 0.08 meters.

The column marked HAG refers to the "Height Above Ground," which is 0.025 m (1 inch) in Table 1. The next two columns, Dia_V and Dia_H, indicate the wire diameter for the vertical and horizontal wires respectively, which in this case are both 0.025 m (1 inch) in diameter. The column headed by

Table 1
P2, Made of Single Thick Wires. See Fig 7.

Peri. m	*HAG* m	*Dia$_V$* m	*Dia$_H$* m	*Tx Z_0* Ω	*Height* λ	*Width* λ	*Z_{in}* Ω	*G_{Lo}/TOA* dBi/°	*G_{Hi}/TOA* dBi/°
19.5	0.025	0.025	0.025	600	0.42	0.08	250	–0.8/22	1.1/12

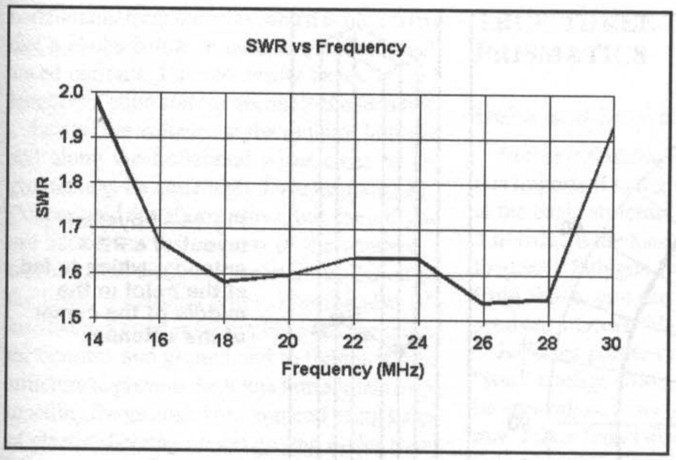

Fig 11—Swept SWR curve for P2 antenna in Fig 7, using feed line Z_0 of 250 Ω.

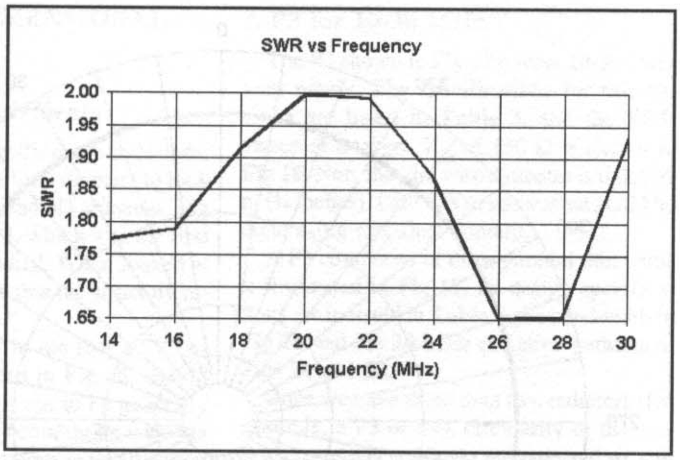

Fig 12—Swept SWR curve for P2 antenna in Fig 7, using feed line Z_0 of 200 Ω.

Table 2
P2-3, Made Using Sets of Three Parallel #10 wires. See Fig 15.

Peri. *m*	*HAG* *m*	*Dia$_V$* *AWG*	*Dia$_H$* *AWG*	*TxZ$_0$* *Ω*	*TxRZ$_0$* *Ω*	*Sep$_V$* *m*	*Sep$_H$* *m*	*Height* *λ*	*Width* *λ*	*Z$_{in}$* *Ω*	*G$_{Lo}$/TOA* *dBi/°*	*G$_{Hi}$/TOA* *dBi/°*
19	0.05	#10	#10	600	450	0.3	0.3	0.44	0.06	150	–0.72/23	1.71/13

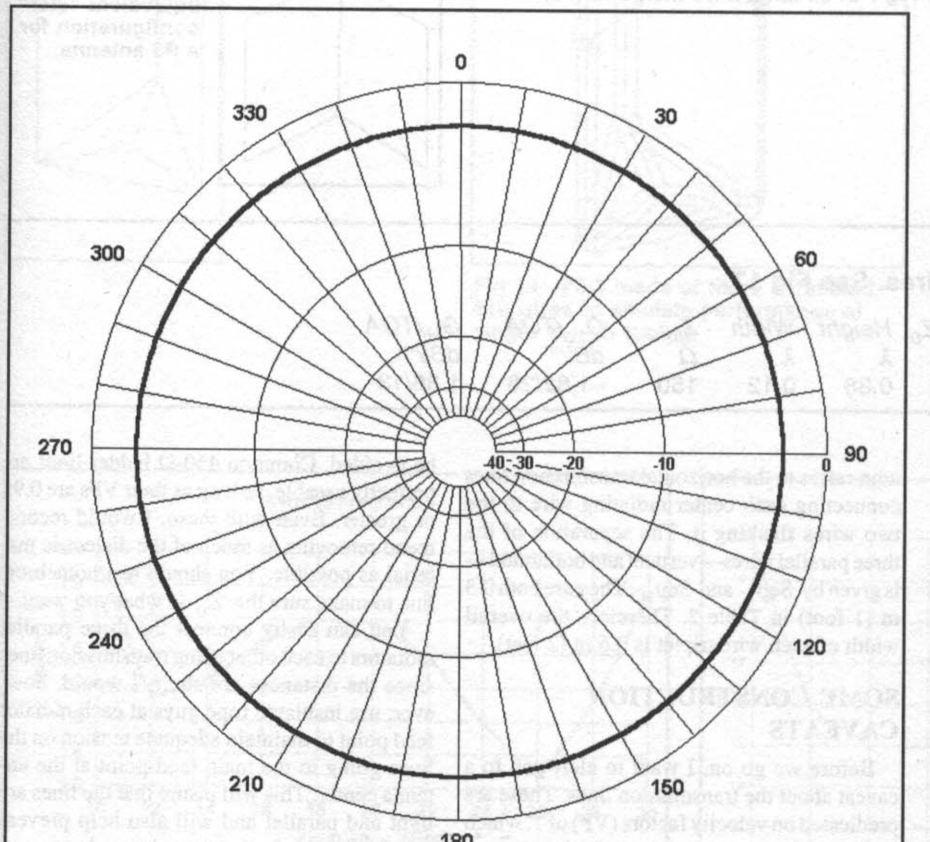

Fig 13—Azimuth pattern for P2 antenna in Fig 7 at 14 MHz. The pattern is omnidirectional.

Tx Z_O refers to the Z_0 of the two feed lines radiating from the antenna feed point in the central axis to the centers of the radiators on either side of it. It is 600 Ω in this case. The column marked Z_{in} refers to the impedance at the feed point.

Now look at the columns marked G_{LO}/TOA and G_{HI}/TOA. For all of the antennas that I am describing here, G_{LO} (Gain low) is the gain in dBi, and TOA is the takeoff angle in degrees at the lowest frequency of the passband. In this case the lowest frequency is 14 MHz and the takeoff angle there is 22°. G_{HI} (Gain high) refers to the highest frequency, which in this case is 30 MHz, where the takeoff angle is 12°.

Figs 11 and **12** are SWR sweeps from 14-30 MHz for reference input impedances, Z_{in}, of 250 and 200 Ω respectively. Note that either targeted Z_{in} would work over the frequency range, but you can choose the preferred response based on your own needs.

The radiation patterns **Figs 13** and **14** illustrate another design tradeoff that you must make. You can see in Fig 7 that the radiators are fairly closely spaced, and Fig 13 shows that at 14 MHz the pattern is circular. Note however in Fig 14 that the azimuth pattern at 30 MHz is very slightly out of circular by about 0.7 dB. At 30 MHz, the spacing is wider in terms of wavelength and the antenna wants to radiate broadside, distorting the circularity. The exact dimensions in meters and feet are given for this

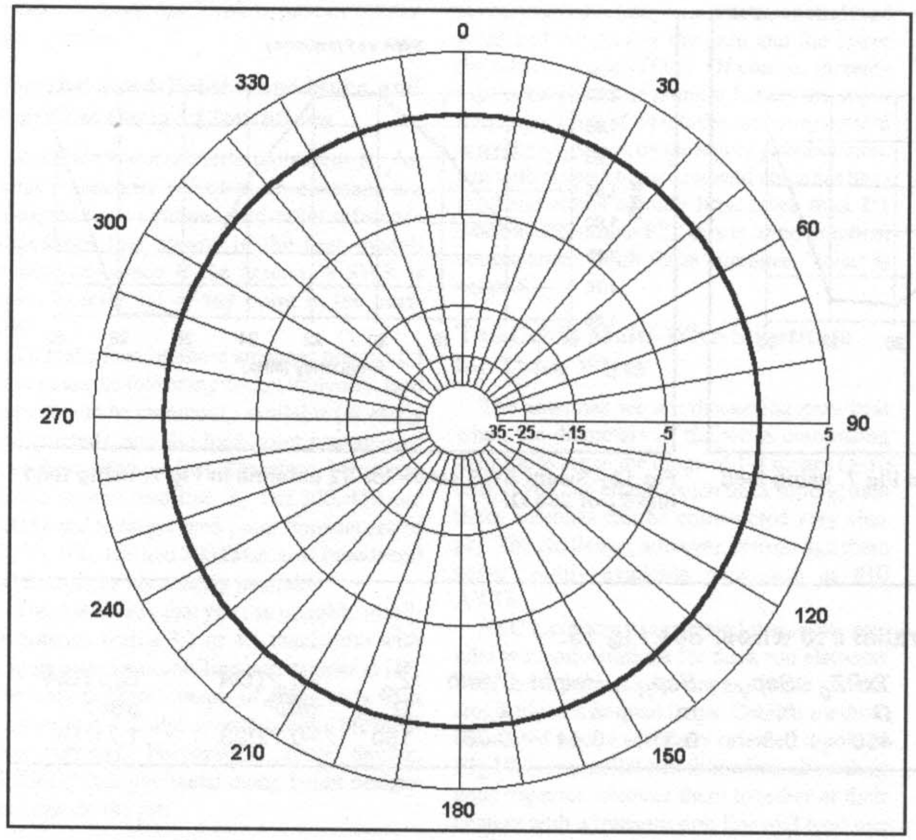

Fig 14—Azimuth pattern for P2 antenna in Fig 7 at 30 MHz. Here the pattern is slightly distorted.

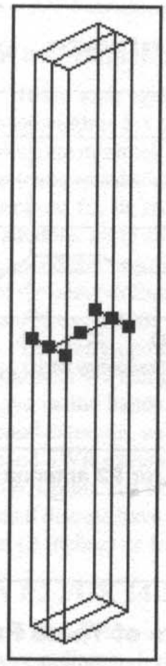

Fig 15—Physical layout of a P2-3 antenna, which is fed at the point in the middle of the center of the antenna.

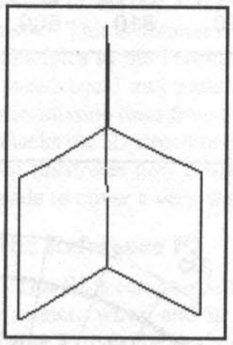

Fig 16—Physical layout of equivalent "star" configuration for a P3 antenna.

Table 3
P3 Composed of Single ¾-inch Wires. See Fig 17.

Peri. m	HAG m	Dia_V m	Dia_H m	Tx Z_0 Ω	Height λ	Width λ	Z_{in} Ω	G_{Lo}/TOA dBi/°	G_{Hi}/TOA dBi/°
18.5	0.025	0.01905	0.01905	600	0.38	0.12	150	−1.82/26	1.36/13

antenna and all of the others to follow, in the last Table in this article, Table 11.

A P2 Composed of Three #10 Parallel Wires

Fig 15 shows a P2 made using sets of three parallel #10 wires. Its performance replicates that of the single, thick-wire P2 shown in the sweep in Figure 11.

Let us look closely at **Table 2** and follow the columns. Subsequent tables describing triple-wire antennas will be similar. First, look at the columns marked Tx Z_0 and TxR Z_0. Tx Z_0 is the characteristic impedance of the transmission lines connecting the central radiating wires—the three parallel vertical wires—at their centers to the antenna's feed point, which is located at the central axis. The TxR Z_0 column refers to the horizontal transmission lines connecting each center radiating wire to the two wires flanking it. The separation of the three parallel wires—vertical and horizontal—is given by Sep_V and Sep_H. They are both 0.3 m (1 foot) in Table 2. Therefore the overall width of each wire triplet is 0.6 m (2 feet).

SOME CONSTRUCTION CAVEATS

Before we go on, I want to alert you to a caveat about the transmission lines. These are predicated on velocity factors (VF) of 1, which involve no propagation delays. Therefore these lines should be constructed without dielectric and should only use air spacing. Periodic separators are necessary to maintain the Z_0 but commercial lines using solid dielectrics must be avoided. Common 450-Ω ladder lines are perfectly useable, so long as their VFs are 0.95 or greater. Even with these, I would recommend removing as much of the dielectric material as possible. You should test homebrew line to make sure the Z_0 is what you want.

You can easily connect the three parallel radiators to each other using transmission lines since the distances are short. I would, however, use insulated rope guys at each radiator feed point to maintain adequate tension on the lines going to the main feed point at the antenna center. This will insure that the lines are tight and parallel and will also help prevent sagging of the feed point when a balun and coaxial feed cable are attached.

I also use rope guys suspended from the top corners to hold up the feed point and prevent sagging. The coaxial cable must be brought out horizontally from the array, and it is imperative that a choke balun be used to prevent unbalanced currents. I use 50 ferrite beads along a length of Teflon coax to decouple the feed line.

Lastly, the voltages at the radiator bottoms and along the horizontal wires close to the ground may be quite high. I use insulated #10 Copperweld for all my wires, but even if you use bare wires for the rest of the antenna, I would advise using some sort of insulation on the lower horizontal wires. I would also advise using a good insulator between the radiator bottoms and ground and to tighten up the structure to prevent the lower horizontals from touching the ground. I recommend using strips of plastic sheeting on the ground under these wires.

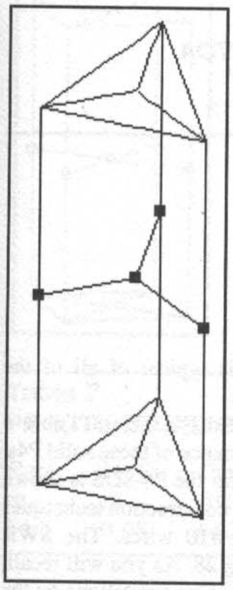

Fig 17—P3, using a combination of "star" and "delta" configurations.

TRUE THREE-DIMENSIONAL PRISMATICS

Delta and Star Equivalents

Before discussing specific antenna designs, it is important to digress for a moment to look at the basic structure of the 3D antennas. Fig 5 illustrated the basic P3, which was the first Prismatic Polygon I studied. When looked at from above, you can see that the structure resembles a Greek "delta."

Jefferies pointed out to me that a "Y" or "star" configuration, seen in **Fig 16**, should be equivalent. This turns out to be generally true. I later found that by combining the delta and star configurations more capacitive end loading resulted and enabled the use of shorter radiators. See **Fig 17**.

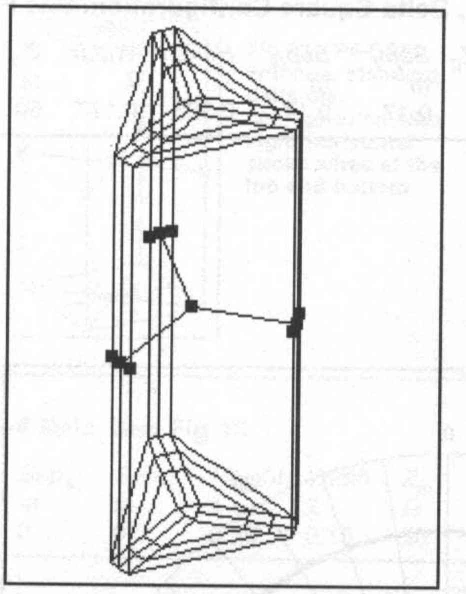

Fig 19—P3-3 made of three paralleled #10 wires to emulate performance of single ¾-inch tubing.

A P3 for 10-30 MHz

The P3 shown in Fig 17 covers 10-30 MHz very nicely. The specifications for this antenna are listed in **Table 3**, and the SWR sweep at a target Z_{in} of 150 Ω is shown in **Fig 18**. Note that the wire diameter is 0.01905 m (¾ inches). I did this to show what could be done using electrical conduit.

A P3 composed of three parallel thin wires is illustrated in **Fig 19**. Its design specifications are in listed in **Table 4**, the bandwidth in **Fig 20** and the 30 MHz radiation patterns in **Figs 21 and 22**.

Once we have more than two radiators (for example, a P3 or P4), circularity in the azimuth pattern is no longer an issue and we can aim for the shortest possible radiators and smallest antenna structures.

A P4 for 7-30 MHz

A P4 having four radiators in a square configuration can easily cover 7-30 MHz. As I have alluded to above, the problem is in seeing how thin we can make these radiators. With a frequency coverage of 4.28:1, the smallest radiators that I have been able to get away with are 0.05 m (2 inches) in diameter.

Table 5 gives the specifications for two P4s that cover this frequency range. One, shown in **Fig 23**, uses a standard delta-star configuration and is labeled P4DS4. It has four horizontal spoke wires at the top and bottom.

The P4DS8 in **Fig 24** has eight horizontal spoke wires, and I included it to illustrate another effect. The extra horizontal spokes enable further shortening of the radiators due to increased capacitive end loading. Here, the overall antenna height is only 22.75 feet.

Fig 25 is the swept-frequency SWR response for the P4-DS4, and **Fig 26** gives us the R and X variations over the two-octave passband for the P4-DS4. This kind of cyclic

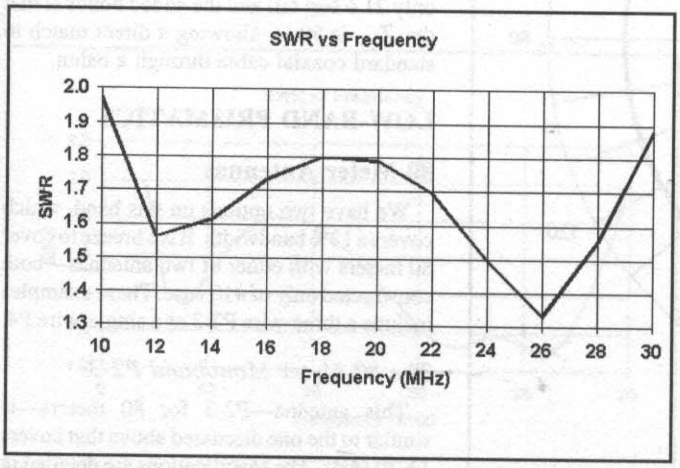

Fig 18—SWR sweep for P3 antenna in Fig 17 made of ¾-inch diameter tubing, using dimensions from Table 3.

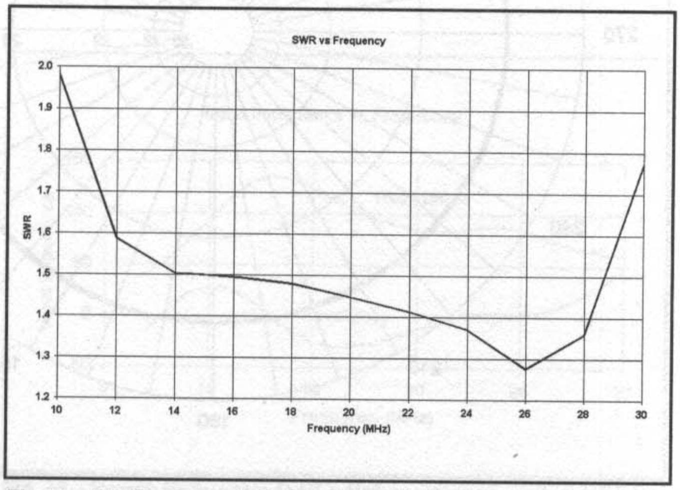

Fig 20—SWR sweep of P3-3 antenna in Fig 19.

Table 4

P3-3 Made of Three Parallel #10 Wires. See Fig 19.

Peri. m	HAG m	Dia_V AWG	Dia_H AWG	TxZ_0 Ω	$TxRZ_0$ Ω	Sep_V m	Sep_H m	Height λ	Width λ	Z_{in} Ω	G_{Lo}/TOA dBi/°	G_{Hi}/TOA dBi/°
19.5	0.05	#10	#10	600	600	0.06	0.06	0.362	0.138	150	−1.66/25	1.47/13

Table 5

Two P4s for 7-30 MHz, Using 2-inch Tubing. See Fig 23 and 24.

Type	Peri. m	HAG m	Dia_V AWG	Dia_H AWG	TxZ_0 Ω	Height λ	Width λ	Z_{in} Ω	G_{Lo}/TOA dBi/°	G_{Hi}/TOA dBi/°
P4-DS4	21.15	0.05	0.05	0.05	500	0.35	0.15	75	−1.9/27	1.65/13
P4-DS8	20.4	0.05	0.05	0.05	550	0.34	0.16	75	−2/28	1.48/14

Table 6

P4-3DS - Three Parallel #10 Wires, Delta-Square Configuration. See Fig 27.

Peri. m	HAG m	Dia_V AWG	TxZ_0 Ω	$TxRZ_0$ Ω	Sep_V m	Sep_H m	Height λ	Width λ	Z_{in} Ω	G_{Lo}/TOA dBi/°	G_{Hi}/TOA dBi/°
20.4	0.025	#10	450	450	0.17	0.17	0.323	0.177	50	−1.94/27	2.3/13

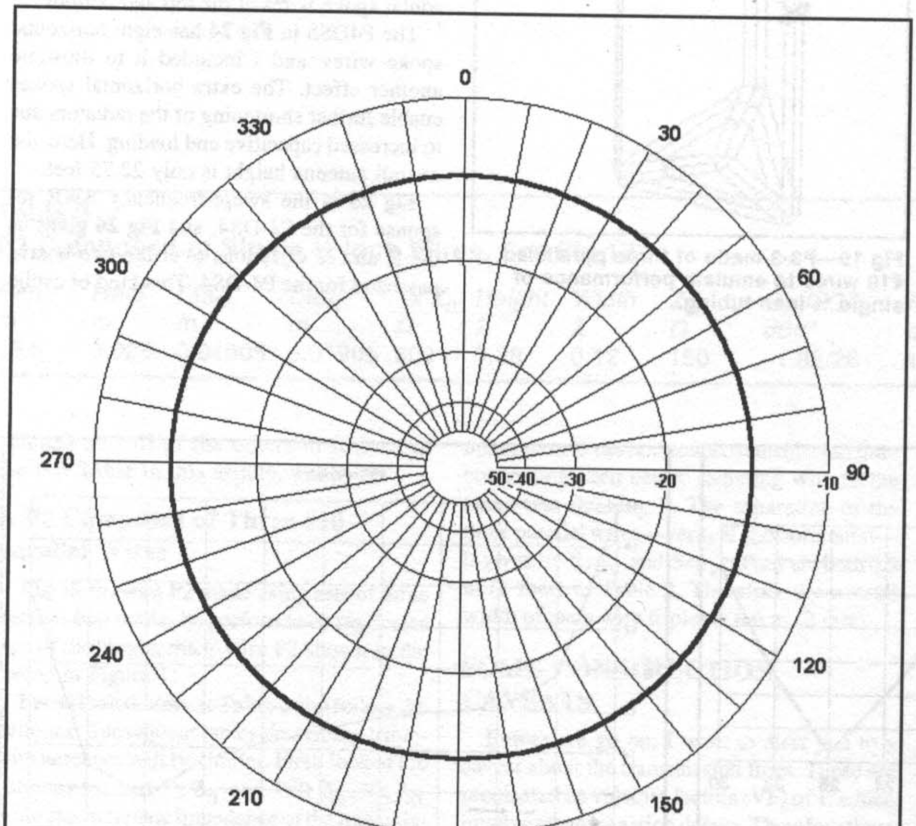

Fig 21—Azimuth pattern for P3-3 antenna in Fig 19.

R and X variation is typical of all of the wideband Prismatics.

The antenna labeled P4-3DS in **Table 6** replicates the performance of these solid P4s. The physical layout for the P4-3DS is shown in **Fig 27**, illustrating construction techniques using three parallel #10 wires. The SWR sweep is given in **Fig 28**. As you will recall, I imposed on myself some limitations on the use of readily constructed transmission lines, targeting a Z_0 of 450 Ω for both lines connecting the three parallel radiators to each other and connecting the central radiator to the common antenna feed point. As a result, this antenna only covers 7-29.5 MHz. It is only 21.6 feet tall and the added bonus is that the Z_{in} is 50 Ω, allowing a direct match to standard coaxial cable through a balun.

LOW-BAND PRISMATICS

80-Meter Antennas

We have two options on this band, which covers a 13% bandwidth. It is a breeze to cover 80 meters with either of two antennas—both constructed only of #10 wire. These examples include a three-wire P2-3 or a single-wire P4.

The 80-Meter Monoband P2-3

This antenna—P2-3 for 80 meters—is similar to the one discussed above that covers 14-30 MHz. The specifications are detailed in **Table 7.**

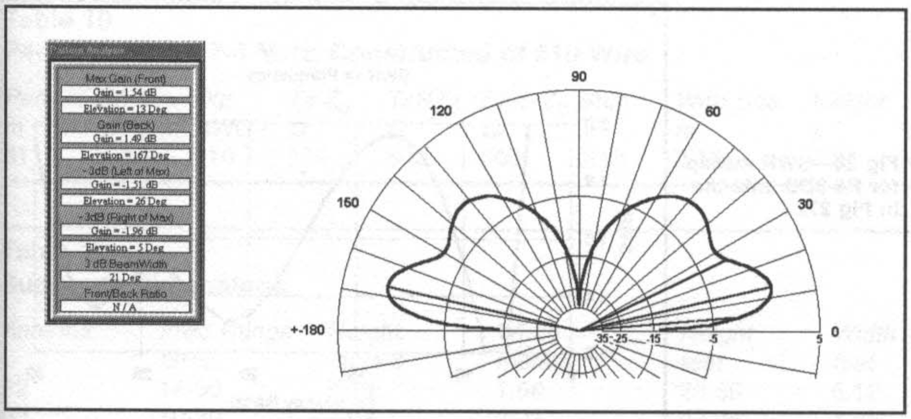
Max Gain (Front)
Gain = 1.54 dB
Elevation = 13 Deg
Gain (Back)
Gain = 1.49 dB
Elevation = 167 Deg
- 3dB (Left of Max)
Gain = -1.51 dB
Elevation = 26 Deg
- 3dB (Right of Max)
Gain = -1.96 dB
Elevation = 5 Deg
3 dB BeamWidth
21 Deg
Front/Back Ratio
N / A

Fig 22—Elevation pattern for P3-3 antenna in Fig 19.

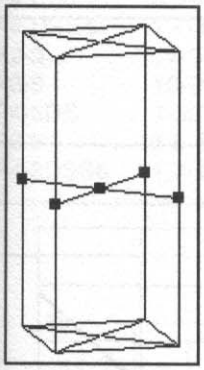

Fig 23—P4-DS4 antenna, standard delta-star configuration with four horizontal spoke wires at the top and bottom.

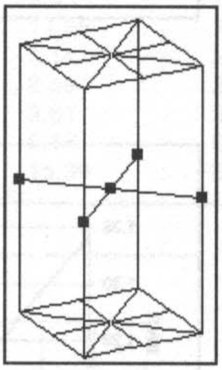

Fig 24—P4-DS8 antenna, standard delta-star configuration with eight horizontal spoke wires at the top and bottom.

Note the SWR sweep in **Fig 29**, which shows how easy it is to cover the widest amateur band with a Prismatic. This antenna's overall height is only 62.5 feet and it can be directly fed with 50-Ω coaxial cable. The only down side is that the gain is slightly low because of the extremely short radiators. Note also that the distance separating the radiators is small enough to result in a azimuth pattern that is within 0.5 dB of circularity.

80-Meter P4 Single #10 Wire

This P4-DS8 is marginally taller than the P2-3 above—at a height of about 73 feet—but it delivers a lot more gain. The antenna gain is in smaller part due to the taller radiators and in larger part due to the presence of four radiators instead of two. See **Table 8**.

Look at two SWR sweeps of this antenna. The 80-meter curve is shown in **Fig 30**, while **Fig 31** shows response over a wider frequency range. This P4-DS8 antenna covers a bandwidth of 3.1-4.6 MHz or almost 50%, and it is made using only a single #10 wire. At 3.5 MHz, this is only 0.00003 λ in thickness. I believe that this is a wonderful demonstration of the capabilities of the Prismatics.

Table 7
P2-3, Three #10 Wires, Covering 3.5-4 MHz. See Fig 15.

Peri. *m*	*HAG* *m*	*Dia_V* *AWG*	*TxZ_0* *Ω*	*$TxRZ_0$* *Ω*	*Sep_V* *m*	*Sep_H* *m*	*Height* *λ*	*Width* *λ*	*Z_{in}* *Ω*	*G_{Lo}/TOA* *dBi/°*	*G_{Hi}/TOA* *dBi/°*
54.5	0.05	#10	600	300	0.3	0.3	0.35	0.15	50	–2.17/27	–1.82/26

Table 8
P4-DS8, Single #10 Wires—for 80 Meters. See Fig 24.

Peri. *m*	*HAG* *m*	*Dia.* *AWG*	*Tx Z_0* *Ω*	*Height* *m*	*Width* *m*	*Zin* *Ω*	*G_{Lo}/TOA* *dBi/°*	*G_{Hi}/TOA* *dBi/°*
63.5	0.05	#10	450	0.35	0.15	200	-0.49/24	-0.5/22

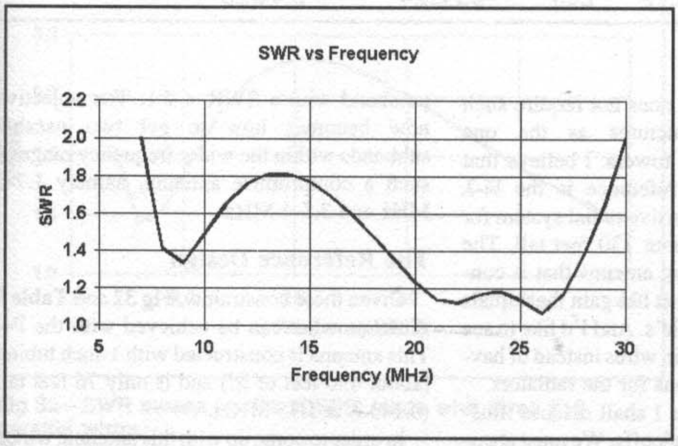

Fig 25—Swept-frequency SWR for P4-DS4 in Fig 23.

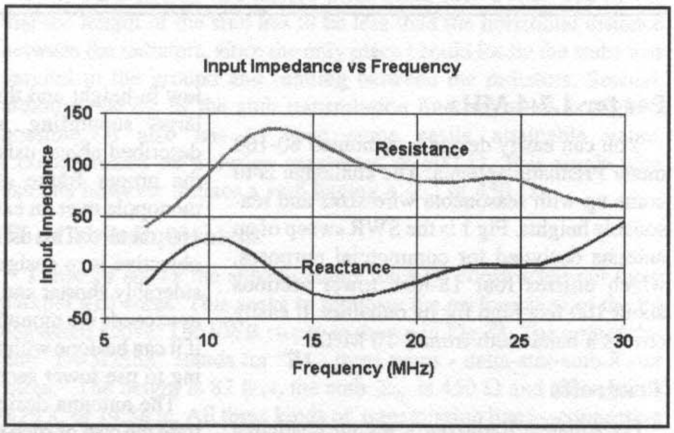

Fig 26—Swept-frequency feed-point resistance and reactance for P4-DS4.

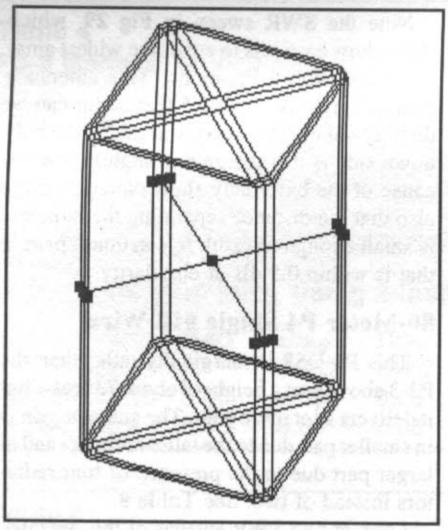

Fig 27—P4-3DS antenna, using paralleled #10 wires, with dimensions from Table 6.

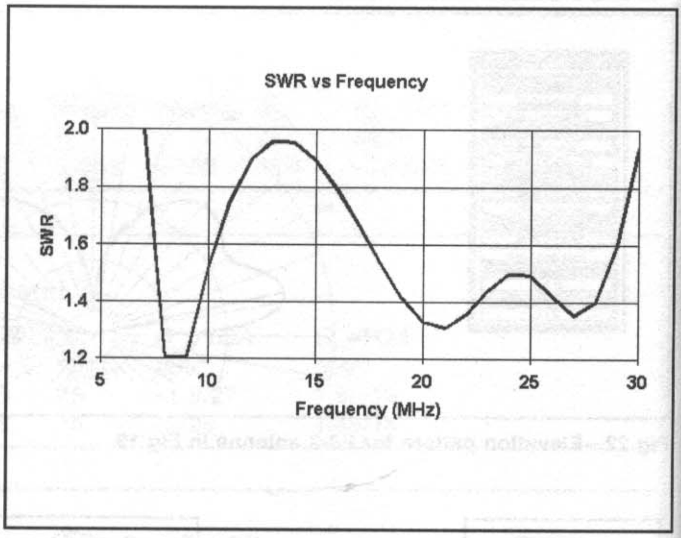

Fig 28—SWR sweep for P4-3DS antenna in Fig 27.

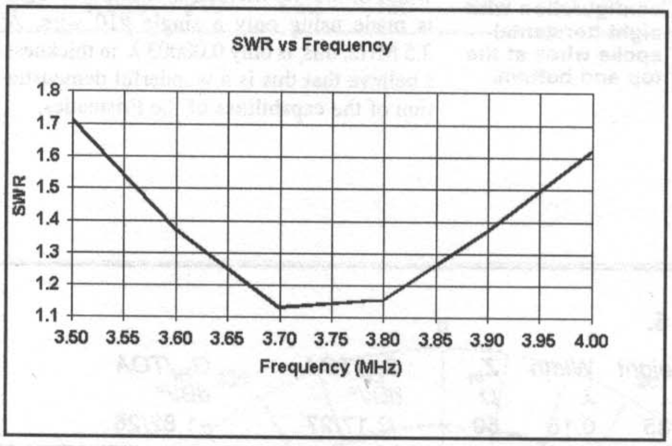

Fig 29—SWR sweep for P2-3 antenna in Fig 15, using three paralleled #10 wires.

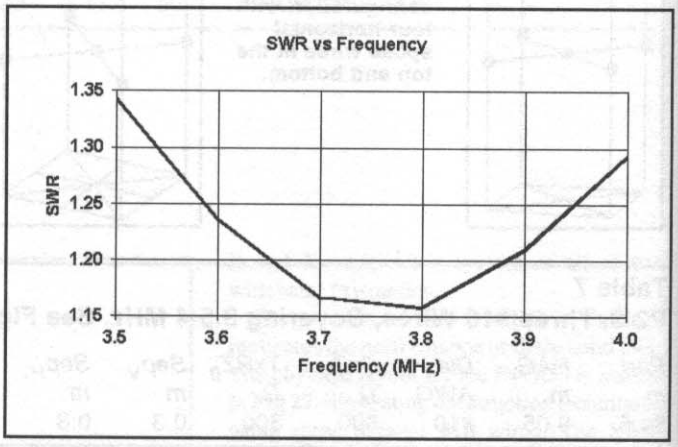

Fig 30—SWR sweep for single #10 wire P4-DS8 for 80 meters in Fig 24.

Table 9
P4-DSS4—1.7-4 MHz, Single 1-inch Tubing. See Fig 23.

Peri. m	*HAG* m	*Dia.* AWG	*Tx* Z_0 Ω	*Stub* Z_0 Ω	*Stub* λ	*Height* λ	*Width* λ	Z_{in} Ω	G_{Lo}/TOA dBi/°	G_{Hi}/TOA dBi/°
75	0.05	0.025	300	450	0.17	0.31	0.19	200	–0.22/24	0.44/23

P4s for 1.7-4 MHz

You can easily design a combined 80-160 meter Prismatic antenna. The challenge is to come up with reasonable wire sizes and reasonable heights. Fig 1 is the SWR sweep of an antenna designed for commercial purposes, which utilizes four 18-inch tower sections about 100 feet high for its radiators. It easily covers a bandwidth from 2-10 MHz.

Tradeoffs

For Amateur Radio purposes, the challenge is to come up with an antenna that is relatively low in height and that does not require such large supporting structures as the one described above using towers. I believe that the proper frame of reference is the ¼-λ monopole over an extensive radial system for 160 meters. This is about 130 feet tall. The objective is to design an antenna that is considerably shorter and that has gain that equals or exceeds the monopole's. And I'd like to see if it can be done with thin wires instead of having to use tower sections for the radiators.

The antenna designs I shall discuss illustrate the cost of such tradeoffs. We must abandon the ideal of covering the full 1.7-4 MHz passband with a SWR < 2:1. The objective now becomes how to get two useable subbands within the wider frequency range of such a compromise antenna, namely 1.7-2 MHz and 3.5-4 MHz.

The Reference Design

Given these constraints, **Fig 32** and **Table 9** illustrate what can be achieved with the P4. This antenna is constructed with 1-inch tubing (about 490 feet of it!) and is only 76 feet tall (0.145 λ at 1.75 MHz).

In order to come up with this antenna, which is only slightly over $^1/_8$ λ tall, I had to use an

Table 10
P4-3DSS8 for 1.7-4 MHz, Constructed of #10 Wire

Peri. *m*	*HAG* *m*	*Dia.* *AWG*	*Tx Z_0* *Ω*	*TxRZ_0* *Ω*	*Stub Z_0* *Ω*	*Stub* *λ*	*Wire Sep* *m*	*Height* *λ*	*Width* *λ*	*Zin* *Ω*	*G_{Lo}/TOA* *dBi/°*	*G_{Hi}/TOA* *dBi/°*
81	0.025	#10	600	600	600	0.18	0.13	0.31	0.19	200	–0.11/25	–0.59/22

Table 11
Summary Dimensions

Antenna	*Freq Range* *MHz*	*Height* *meters*	*Width* *meters*	*Height* *feet*	*Width* *feet*	*Stub length* *meters*
P2	14-30	8.19	1.56	26.86	5.12	
P3	10-30	7.03	2.22	23.06	7.28	
P4-DS4	7-30	7.4	3.17	24.27	10.40	
P4-DS8	7-30	6.94	3.26	22.76	10.69	
P4-DS8	3.5-4	22.23	9.53	72.91	31.26	
P4-DSS4	1.7-4	23.25	14.25	76.26	46.74	12.75
P2-3	14-30	8.36	1.14	27.42	3.74	
P3-3	10-30	7.06	2.69	23.16	8.82	
P4-3DS	7-30	6.59	3.61	21.62	11.84	
P2-3	3.5-4	19.08	8.18	62.58	26.83	
P4-3DSS8	1.7-4	25.11	15.39	82.36	50.48	14.58

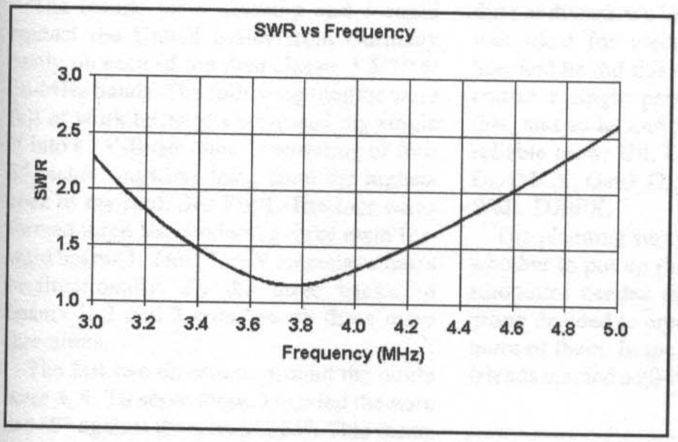

Fig 31—SWR sweep for single #10 wire P4-DS8 in Fig 24, over a wider frequency range.

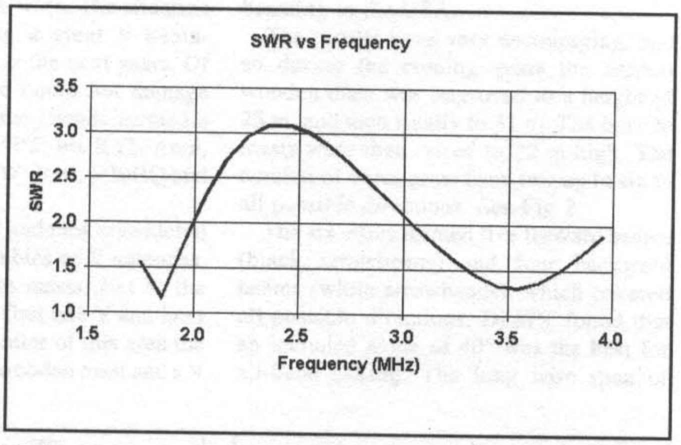

Fig 32—SWR sweep for P4-DSS4 using single #10 wires and shorted stub at center of radiators.

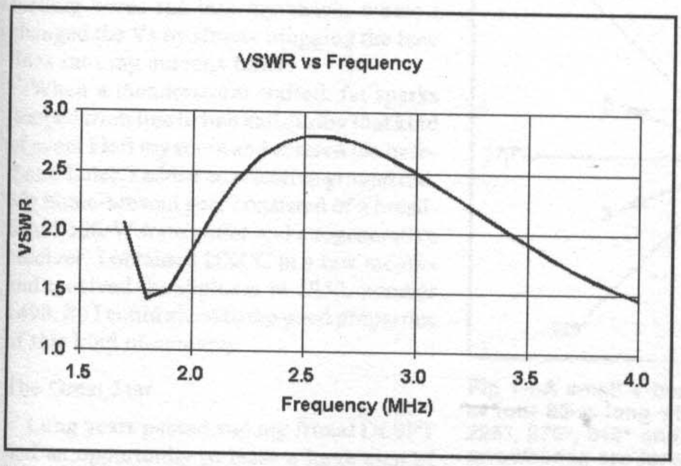

Fig 33—SWR sweep for P4-3DSS8, made with three #10 parallel wires.

additional wrinkle in the design. This was to inductively load the four radiators at their centers by using shorted transmission-line stubs.

I was restricted by two factors when using such a stub. The first is that the length of the stub has to be less than the horizontal distance between the radiators, since the only place I could locate the stubs was parallel to the ground and running between the radiators. Second, although the Z_0 of the stub transmission line has to be as high as possible, it also has to have some easily attainable value. I compromised on a design maximum of 600 Ω. This single-wire antenna however utilizes a stub having a Z_0 of 450 Ω.

The Cebik Equivalent

Table 10 shows the specifications for a P4 constructed out three parallel #10 wires. This seeks to replicate the performance of the P4 discussed above. The SWR sweep is shown in **Fig 33**. The nomenclature "P4-3DSS8" stands for "P4 - three wires - delta-star-stub-8 star wires." The height is 82 feet, the stub Z_0 is 450 Ω and its length is 0.18 λ, or 14.58 m. All three kinds of transmission lines—connecting the three radiators to each other, connecting the radiator feed points to the central antenna feed point and the shorted stubs themselves—have Z_0 of 600 Ω.

The gain of this antenna is within 0.6 dB of isotropic and the azimuth pattern is perfectly circular. The TOA is part way between that of a monopole and a full-sized vertical dipole, being at 22°-25° over both bands.

Summary

I have described some uses of the Prismatic Polygon, a novel antenna design with extremely wide bandwidth. I've presented a variety of Prismatic antennas that can cover many ham bands with a single structure.

Intrinsic to the bandwidth is the use of feed-line coupling (where radiators are fed in common, connected to a central feed point by transmission lines) and the three-dimensional arrangement of identical radiators. I have also demonstrated how these feed-line coupling techniques can be used with simple antennas, such as a pair of dipoles or a simple rectangle, to significantly increase the bandwidth.

Lastly, since some of the antennas require large-diameter tubing to obtain their wide bandwidths, I have explored the use of parallel thin-wire substitutes for the thick tubing.

Notes and References

[1] These antennas are covered by a US Patent, #6,400,337 issued on Jun 4, 2002. The patent covers both the use of multiple radiators arranged in a plane or in three-dimensions and the use of common feed lines to attain a wide bandwidth. Please forward all questions related to commercial applications of these antennas to: Dan Handelsman, CEO, Prismatic Antennas, Inc, 16 Attitash, Chappaqua, NY 10514.

[2] Via the kindness of L.B. Cebik, W4RNL.

[3] "Creating Ultra-Wideband Antennas," *antenneX*, Volume 5, #18.

[4] This is based on the lower cutoff frequency of 294 MHz.

[5] This is referenced to the lowermost frequency of the passband at 260 MHz. The bandwidth is 260-700 MHz.

[6] "Creating Ultra-Wideband Antennas," *antenneX*, Volume 5, #18 and "Practical Wideband Antennas," *antenneX*, Volume 5, #32.

[7] ibid.

[8] Sevick, J, *Transmission Line Transformers*, ARRL.

The Stacked V-Beam-Star—an Effective DX Antenna

By Karl Hille, DL1VU
Goethestrasse 3
83661 Lenggries, Germany

DL1VU describes a *really big* wire antenna.

I started in amateur radio in 1949 and my first antenna was a 42-meter longwire, which produced no better than average results. A few months later I extended it to a length of 85 meters and this worked better than before on all bands. I was not really satisfied, however, and so I decided to enlarge it with a second 85-meter longwire. I thus build up my first V-Beam following *The ARRL Antenna Book* (1949 edition, price $1).

The results were amazing and I could contact the United States from Germany easily on each of the then classic 3.5/7/14/28-MHz bands. The following months were full of work because I increased my single V into a "V-Beam-Star," consisting of four 85-meter longwires hung from the highest apex of my roof. See **Fig 1**. The four wires formed three Vs, producing three main forward beams 1, 2 and 3. A V antenna radiates bi-directionally. So the three backward beams 1, 2 and 3 could reach three more directions.

The last two directions around the circle were 4, 4. To serve these, I excited the wire at 360° against the wire at 225°. This forms a so-called *obtuse-angle V*, which served the directions 4, 4. The gain of an obtuse-angle V is less than the gain of a V. Four feeding wires ran into my shack, where I changed the Vs by simply plugging the feed lines into my antenna tuner.

When a thunderstorm started, fat sparks jumped from line to line and during that kind of event I left my room and entered the basement! Later, I added an effective ground rod. My home-brewed gear consisted of a breadboard 100-W transmitter and a regenerative receiver. I obtained DXCC in a few months and received the diploma in 1952, number 1498. So I could attest to the good properties of this kind of antenna.

The Great Star

Long years passed and my friend DL9PT had an opportunity to lease a large area of meadows for a comparatively few dollars from a farmer near my original location. The farmer managed his own land, but DL9PT could erect masts, hang up wires and install a caravan with his gear, providing that he did not disturb the farm work. The situation was ideal for erecting a great V-Beam-Star and he did this over the next years. Of course a single person could not manage this, and so he and some friends formed a reliable crew: Uli, DL9PT; his XYL Anni, DL4MCX; Gerd, DJ5IW; Bert, DJ9HQ and Walt, DJ0FX.

The planning started and they considered whether to put up rhombics or V antennas. Rhombics needed more masts, and so the group decided to erect first one V and later more of them. In the center of this area the friends erected a 20-m wooden mast and a V antenna with two 160-m long legs. They also installed 10-m high outside masts beaming to the USA.

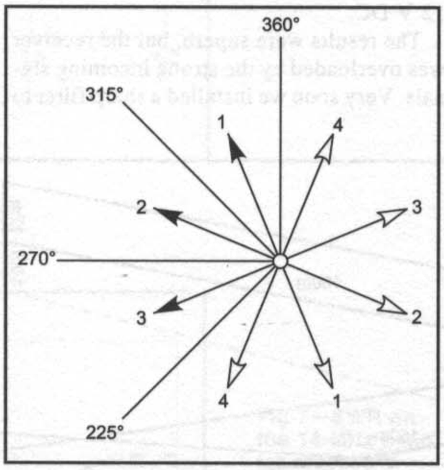

Fig 1—A small V-beam star consisting of four 85-m long wires, directed at 225°, 270°, 315° and 360°. Black arrowheads are forward direct beams. White arrowheads are backwards beams. The 4 – 4 directions are non-optimally covered by the obtuse-angle beam, using the 225° and 360° wires.

The results were very encouraging, and so during the coming years the central wooden mast was improved to a height of 25 m, and then finally to 31 m. The outside masts were then raised to 22 m high. The number of wires grew from two up to six in all possible directions. **See Fig 2.**

The six wires formed five forward beams (black arrowheads) and four backward beams (white arrowheads), which covered all possible directions. DL9PT found that an included angle of 40° was the best for all-band DXing. The long wire span of

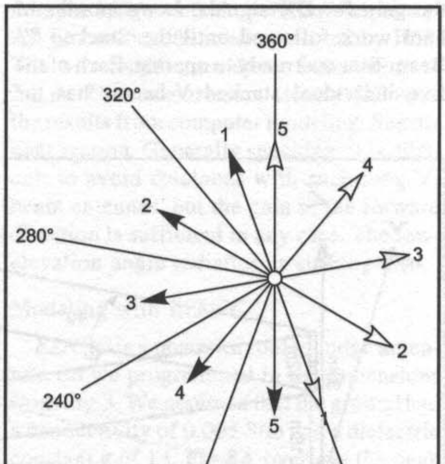

Fig 2—The big V-Beam Star consisting of six 160-m long wires. Black arrowheads are the forward beams. White arrowheads are the backwards beams.

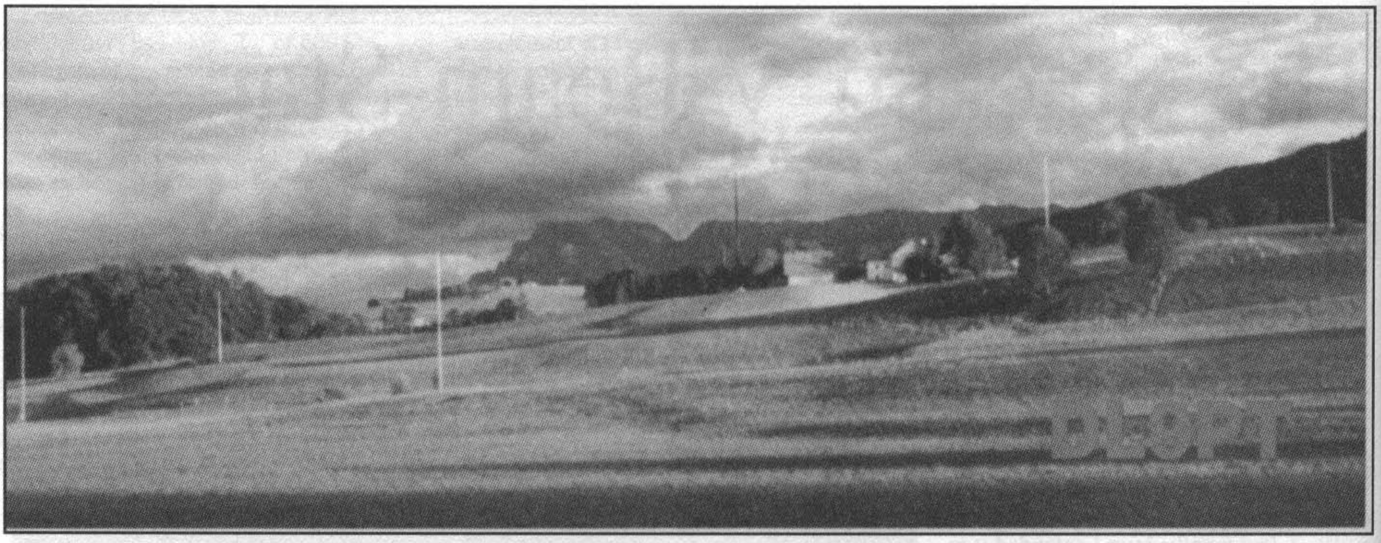

Fig 3—DL9PT's panoramic QSL card, showing the seven masts used in the Stacked V-Beam Star array.

160 meters needed strong wires. Regular copper wire will not sustain the pulling power. Hard-drawn copper wire might have been strong enough, but this is not easy to obtain in Germany. The only choice was copper-clad steel of top quality. A diameter of 2.1 mm was chosen, since this wire has a breaking tension of 395 kg. The wire company sold only spools of 500 kg or more, and while this was not so simple to pay for and to transport, the group purchased a spool.

Now there was more than enough wire available and the team considered how to use this bounty. They decided to install a second set of wires under the existing six wires. See **Fig 4**. This stacking would help medium-angle radiation coverage, suppress undesired higher-angle lobes and improve the gain for DX signals. Long months of hard work followed until the Stacked V-Beam-Star was ready to operate. Each of the five individual stacked V-beams has the dimensions shown in **Table 1**.

Table 1
Dimensions for Stacked V-Beam

Length of wire, 160 m	Central mast, 31 m high
Outside mast, 22 m high	Stacking distance 12 m
Apex angle 40°	Grounding wire 40 m
Resistive loads, 300 Ω / 300 W	Grounding rod 2 m
Grounding radials every outside post, each 10 m long.	

On the main mast we installed a weather-proof switching box with a relay matrix to select the different stacked antennas and to combine them into Vs. We could select single stacked wires also, but the results of these could not compare with the V, even for wires aimed exactly at the wanted target. The RF-relays were controlled with 12 V DC.

The results were superb, but the receiver was overloaded by the strong incoming signals. Very soon we installed a sharp filter to suppress all the noise outside the bands. Then a kilowatt amplifier was built to test the antenna. Measuring the temperature of the terminating resistors showed the efficiency of the V antenna: 3.5 MHz, 70%; 7 MHz, 80%; 14 MHz and all upper bands, 90%.

We enjoyed normal DXing but the very low-angle radiation capabilities created new opportunities never found before. Calling CQ DX into what seemed like a dead band awoke would result in many good QSOs. A very difficult path is from Europe

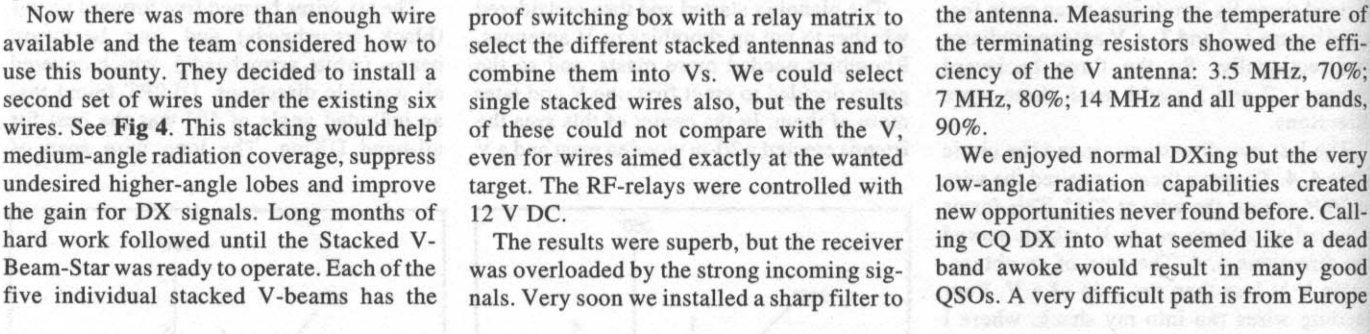

Fig 4—One of the final Stacked V-beam Star antennas, with dimensions.

to the Pacific, especially to Hawaii, since the northern polar region has to be crossed. With the big V-beam, contacts were improved considerably and DL9PT could contact his friends in the Aloha State every undisturbed day.

Measurement of Impedance

Shortly after erecting the stacked V with the intermediate 25-m high main mast, we wondered about the correct resistance for the terminating resistors. At first glance, the antenna resembles a transmission line. The impedance Z_a at the feed point depends on length and the terminating impedance at the end: open or short-circuited. **Fig 6** shows this. Instead of changing the length, which is impractical, we change the frequency. The input impedance oscillates between maxima and minima. Both curves for open and shorted lines intersect at the same impedance. All intersection points connected produce an average $Z_L = 380\ \Omega$. This is the characteristic impedance of the line-like antenna. It's a task to determine these curves by measurement from point by point, but it's sufficient to measure only the maxima and minima where the reactance equals zero.

We employed a 600/75-Ω balun to feed the antenna, with a resistance of 400 Ω at each terminating point. The resulting SWR of the terminated antenna is shown in **Fig 7** on the 20-meter band. Later with the 31-m mast, the resistors had to be changed to 300 Ω, 300-Watt non-inductive types.

Model Measuring

We had the rare opportunity to measure a scale model at a commercial antenna-measuring site. The scale factor of 1:50 meant that the test frequency is 50 times higher than the lowest actual operating frequency. All geometrical dimensions shrink by 1/50. The wire length goes down from 160 m to 3.2 m. The measurement closely followed the results from computer modeling. See the next section. Generally speaking, it is difficult to avoid sidelobes with such long V-beam antennas, but the gain in the forward direction is sufficient in any case. The low-elevation angle radiation is striking also.

Modeling with *EZNEC*

EZNEC is a powerful tool to judge antennas. So we programmed in the dimensions from Fig 3. We assumed that the ground had a conductivity of 0.005 S/m and a dielectric constant ε of 13. **Fig 8A** overlays the peak azimuthal responses for the stacked V-beam in Fig 3 for 3.5, 14 and 28 MHz. Fig 8B shows the peak elevation responses for the same frequencies. Here the low-elevation angle response is obvious.

The stacked V antenna is a broadband

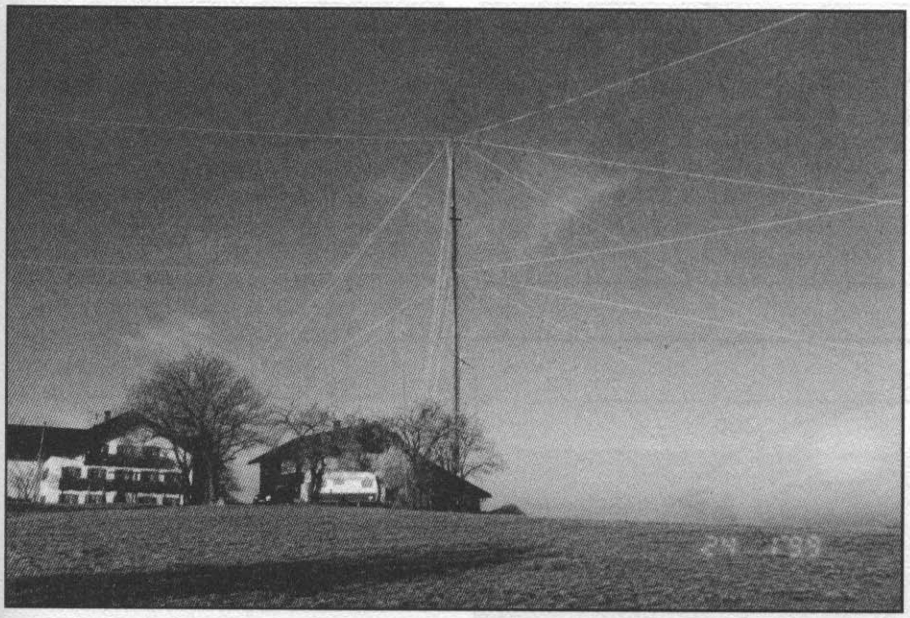

Fig 5—Photograph of the DL9PT main mast with antenna wires.

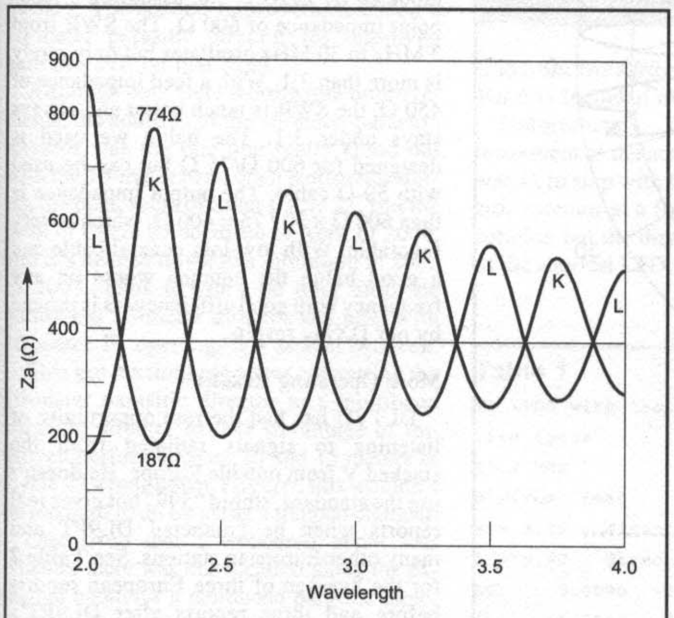

Fig 6—The impedance measured on end of a line (k) for short-circuited case, and (l) for open-circuited case. The straight line shows the average characteristic impedance of the line: 380 Ω.

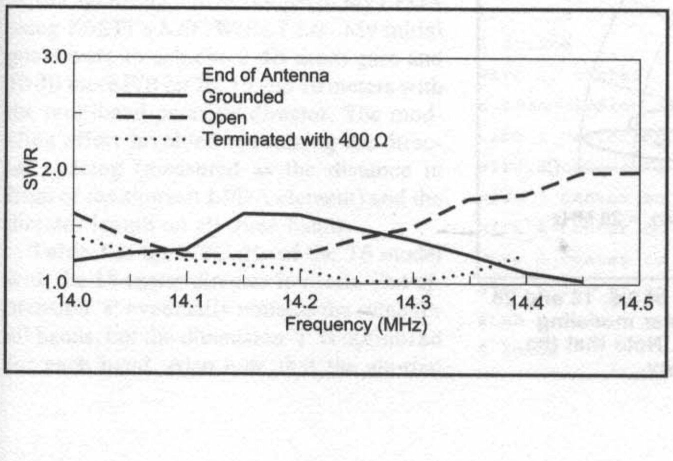

Fig 7—SWR on the 14-MHz band for stacked V-beam in Fig 3.

Table 2

Comparison of DL9PT's Signal to Average European Signals from Remote QTHs

Date	*Band MHz*	*DX-QTH*	*Average dB*	*DL9PT S Units*	*DL9PT dB*	*Difference dB*
Feb 26, 1991	14	T31AF	41	599+10 dB	64	+23
Apr 06, 1991	14	H44VU	38	599+10 dB	64	+26
Apr 13, 1991	18	H44VU	30	599	54	+24

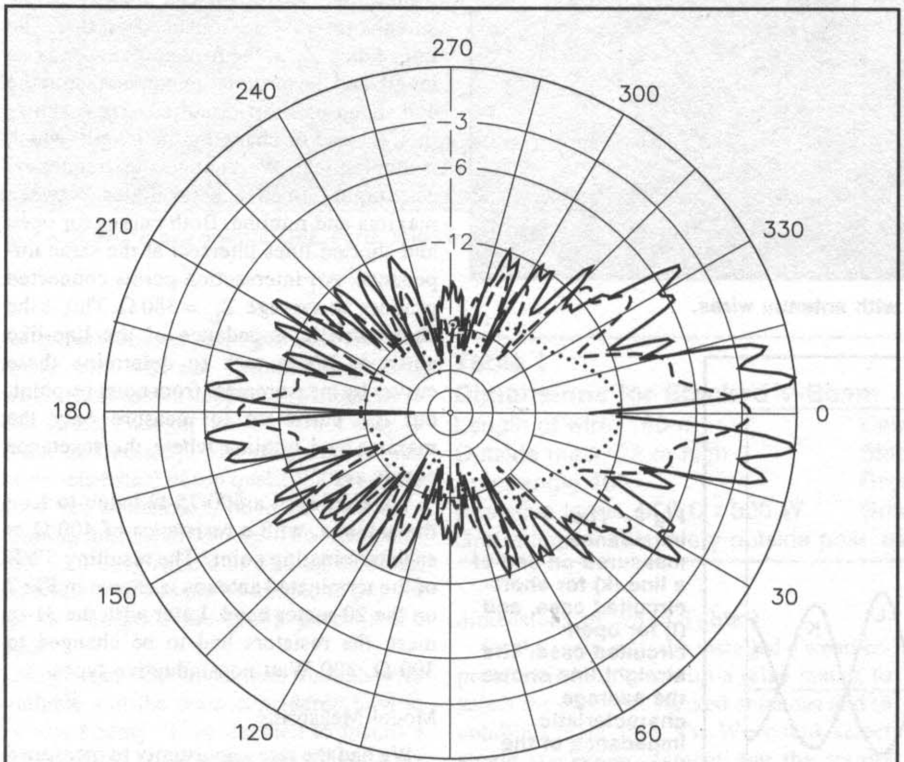

Fig 8—At A, comparison of peak azimuth patterns for frequencies of 3.5, 14 and 28 MHz for the Stacked V-Beam in Fig 3, using the *EZNEC 3.0* computer modeling program. At B, peak elevation patterns for same frequency lineup. Note that the number of sidelobes increases with increase in operating frequency.

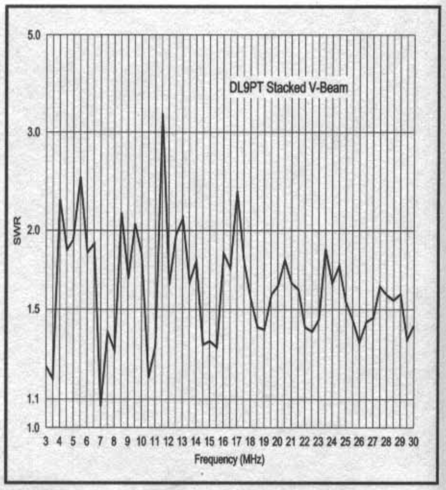

Fig 9—The SWR of the Stacked V-Beam in Fig 3, modeled by *EZNEC 3.0*.

device. This is shown in **Fig 9**. The SWR was modeled by *EZNEC* 3.0, assuming a feed-point impedance of 600 Ω. The SWR from 3 MHz to 30 MHz oscillates but only rarely is more than 3:1. With a feed impedance of 450 Ω, the SWR is much better and always stays under 3:1. The balun we used is designed for 600 Ω/75 Ω but can be used with 50-Ω cable. The output impedance is then 600 Ω × 50 / 75 = 400 Ω, which is very favorable. With low-loss coaxial cable and a good balun the antenna works on any frequency with good efficiency, as is proved by our DXing results.

More Operating Results

DL1VU has had the rare opportunity of listening to signals radiated from the stacked V from outside Europe. He doesn't use the standard, stupid "599" but gives real reports when he contacted DL9PT and many other European stations. See **Table 2** for the average of three European reports before and three reports after DL9PT's signal from DL, compared with his signal. A S-unit is assumed as 6 dB. Table 2 shows you that with such an antenna, you are the king of the bands!

More Improvements to an LPDA

By Carl Luetzelschwab, K9LA
1227 Pion Road
Fort Wayne, IN 46845-9510

K9LA updates the modifications he made to his Tennadyne LPDA in the last *Antenna Compendium.*

In Volume 6 of *The ARRL Antenna Compendium* in 1999, I described two worthwhile improvements to my Tennadyne T6 Log Periodic Dipole Array (LPDA). The first improvement added a shorted stub to the non-feed end to improve the SWR on 20 meters and to resolve a pattern-reversal problem at twice the lowest design frequency. The second improvement added a 10-meter parasitic director for improved gain and F/B on that band.

Although both were worthwhile improvements, the addition of the 10-meter parasitic director was the one that really stood out with the 10-meter band open worldwide during the peak years of Solar Cycle 23. But the peak of Cycle 23 occurred in April of 2000, and it's headed down to a minimum in 2006 or 2007. Thus it won't be long until the additional 10-meter director sits idle, with 10-meter F_2 openings few and far between.

This got me thinking about converting the 10-meter parasitic director to a multiband parasitic director to take advantage of improved performance on 20 and 15 meters as Cycle 23 winds down. I figured this wouldn't be too hard to do by using a trapped element.

One issue that I wondered about was whether there was one location along the extended boom for a multiband parasitic director that afforded improved performance on all the desired bands. I knew that the active region of an LPDA moves away from the feed end as the frequency is lowered, but I didn't know if it would be "in step" with a fixed location parasitic director.

So I again dug into the model of my LPDA using K6STI's *NEC/WIRES 2.0.* My initial goals were to achieve 2 dB more gain and 10 dB more F/B on 20, 15 and 10 meters with the multiband parasitic director. The modeling effort involved optimizing the director spacing (measured as the distance in front of the shortest LPDA element) and the director length on all three bands.

Table 1 is the NEC file of the T6 model with the 15-meter director in place. The dimension 's' eventually remains the same for all bands, but the dimension 'l' is optimized for each band. Also note that the shorted stub from *The ARRL Antenna Compendium, Vol 6* is included in the model.

Unfortunately, I discovered that the movement of the active region of the LPDA wasn't in step with the placement of a parasitic director at a fixed location. My initial solution put the director 4.346 feet in front of the shortest LPDA element (where it was for the 10-meter parasitic element in Vol 6). In that article, the improvement on 10 meters was about 2 dB more gain and at least 10 dB more F/B. But there wasn't any improvement in F/B on 20 meters. To achieve a significant improvement in 20-meter F/B required placement of the parasitic director in-between the second shortest and shortest

Table 1

```
T6 LPDA with 15m parasitic director
free space
21.2 MHz
8 wires, feet
s = 3.75 ; director spacing
l = 9.80 ; director half length
10      0.0000  -7.8190 0    0.0000  7.8190 0  .0729
10     -1.5330  -9.2630 0   -1.5330  9.2630 0  .0729
10     -3.3583 -10.9435 0   -3.3583 10.9435 0  .0729
10     -5.5417 -12.9185 0   -5.5417 12.9185 0  .0729
10     -8.3917 -15.2135 0   -8.3917 15.2135 0  .0729
10    -11.5833 -17.9940 0  -11.5833 17.9940 0  .0729
2     -14.5833  -0.2290 0  -14.5833  0.2290 0    #10 ; part of shorted stub
10       s        -1    0     s        1    0  .0729 ; director element
1 source
Wire 1, center
6 transmission lines
wire 1 center to wire 2 center z=150
wire 2 center to wire 3 center z=150
wire 3 center to wire 4 center z=150
wire 4 center to wire 5 center z=150
wire 5 center to wire 6 center z=150
wire 6 center to wire 7 center z=320 untwisted short end2 ; part of shorted
stub
0 loads
```

Table 2
Comparative Free-Space Performance

	Without Director			*With Director*		
Freq MHz	*Gain dBi*	*F/B dB*	*SWR*	*Gain dBi*	*F/B dB*	*SWR*
14.00	4.26	5.40	1.50	6.21	7.98	1.07
14.10	4.32	5.60	1.58	6.35	7.94	1.19
14.20	4.38	5.80	1.67	6.48	7.81	1.34
21.00	5.61	10.67	2.75	6.69	19.11	2.05
21.20	5.65	10.80	2.89	6.79	20.24	2.25
21.40	5.69	10.91	2.97	6.90	21.48	2.47
28.00	5.30	12.69	2.77	6.55	28.04	1.57
28.20	5.29	12.72	2.86	6.62	30.16	1.60
28.40	5.28	12.74	2.97	6.71	30.86	1.66
28.60	5.27	12.73	3.09	6.81	28.98	1.76
28.80	5.27	12.71	3.24	6.92	26.13	1.91

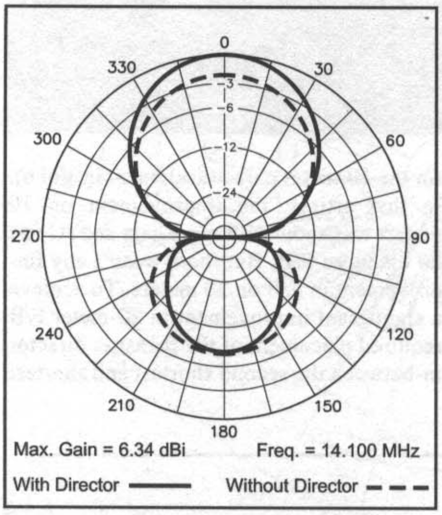

Fig 1—Azimuth comparison patterns on 20 meters.

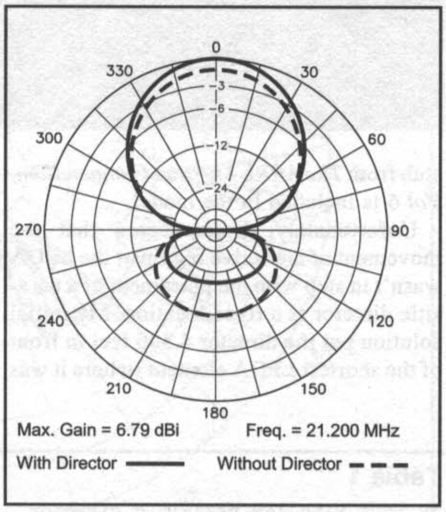

Fig 2—Azimuth comparison patterns on 15 meters.

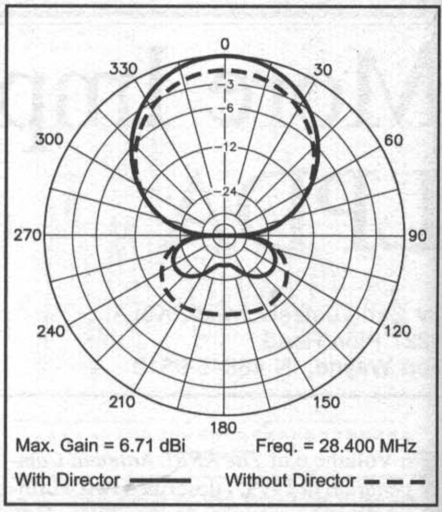

Fig 3—Azimuth comparison patterns on 10 meters.

LPDA elements—about 3 feet from the shortest element but towards the longest element end. Putting it there gave great 20-meter gain and F/B improvement, but then the improvement on 10 meters took a real nosedive.

My final solution was optimizing the parasitic director for 15 meters, and accepting whatever improvement I could achieve on 20 and 10 meters. That worked out to be an acceptable compromise on all three bands.

Table 2 shows the "without director" and "with director" free-space performance on 20, 15 and 10 meters. The director is 3.75 feet in front of the shortest LPDA element (this is the 's' dimension). The 20-meter director is 30.40 feet long; the 15-meter director is 19.60 feet long; and the 10-meter director is 15.20 feet long (these are the 'l' dimensions times 2). These director lengths use a tubing diameter of 0.875 inch.

To summarize the improvements, gain is up about 2 dB on 20 meters; up about 1 dB on 15 meters; and up about 1.5 dB on 10 meters. F/B is up about 3 dB on 20 meters; up about 10 dB on 15 meters; and up at least 15 dB on 10 meters. The SWR is improved on all bands. These improvements may not seem like much, but many times a dB or two of gain or more F/B to reduce an interfering station can be the difference between making a QSO and not making a QSO.

Figs 1, **2** and **3** show the 'with director' and 'without director' free-space azimuth patterns at the center of each band (14.1 MHz, 21.2 MHz, and 28.4 MHz). Presently the results are only modeled results. Winter set in before I could implement the modeled results. Based on the successful implementation of the 10-meter director in Vol 6, I have no doubt that this multiband performance is achievable.

I plan to use a director with large coils and transmitting doorknob capacitors for the traps in order to minimize loss that might negate the gain improvements. Adjusting the multiband director will be a three-step process:

1) Finalize the model at 60 feet (the height at which the LPDA will be mounted) over average ground.
2) Move the director down to 10 feet in the model and note the resonant frequencies on all three bands.
3) Mount the real director at 10 feet and adjust the lengths to match the modeled resonance frequencies.

Verifying the improvements per the *NEC* model may be tough, especially on 20 meters. I do not have the capability to make gain measurements, so that leaves just F/B and SWR to measure. On 20 meters the F/B only improves about 3dB, and that difference is going to be tough to discern. It may turn out that the only indication of improvement will be the improvement in SWR seen in Table 2, which I can readily measure with good accuracy.

Although I picked 20, 15 and 10 meters, this procedure could apply to other bands. For example, I would expect that excellent improvement in gain and F/B could be achieved on 10, 12 and 15 meters simultaneously. Additionally, adding a parasitic *reflector* may be a worthwhile investigation on the lower frequencies of the LPDA design. I'll leave these exercises to others.

An HF Multiband Vertical Antenna

By Gordon Moogk, VE3DBP
645 Lakeside Trail
Point Clark, ON N0G 2R0
Canada

VE3DBP describes his unique multi-band vertical that uses no traps.

Until recently most multiband antennas have used traps of one form or another. Several years ago, Gary Breed, K9AY, described a different approach that uses multiple elements instead of traps.[1]

Fig 1 shows a vertical antenna covering all bands from 40 thru 6 meters using K9AY's approach. The antenna requires a ground counterpoise to work properly and the more radials in the counterpoise the better. In this antenna I used 16 radials of varying lengths of #12 copper wire.

The radials are not visible in **Fig 2**, since they are under the shingles on the roof of the garage and down the inside walls of the garage. The driven element is a 40-meter ¼ λ vertical radiator and is fed with 50-Ω coaxial cable at the base. The additional elements are not fed directly, but instead are tied to the counterpoise and parasitically coupled to the driven element.

The 40-meter element is constructed of telescoping aluminum conduit 1.5 inches in diameter at the bottom and 1 inch at the top. It has two sets of guys made of ¼-inch nylon or other weather-resistant rope. The bottom insulator is a nylon hose coupling, which is available at any hardware store.

The additional vertical elements are for 30, 20, 17, 12 and 10 meters. These elements are spaced evenly around and are supported with insulated brackets to the 40-meter element. The parasitic elements are made of 1 inch or less diameter aluminum tubing. All element lengths are calculated using the handbook formula 246/f MHz.

Tuning Things Up

Once the 40-meter vertical and the counterpoise are in place, check the tuning of the antenna on 40 and 15 meters. You should find a good match on both 40 and 15 meters. You can then start adding the additional elements for the bands you wish to cover, one at a time. Spacing at the bottom of these elements is critical, and I used a screw and locking nut device (see **Fig 3**) to allow precise adjustments.

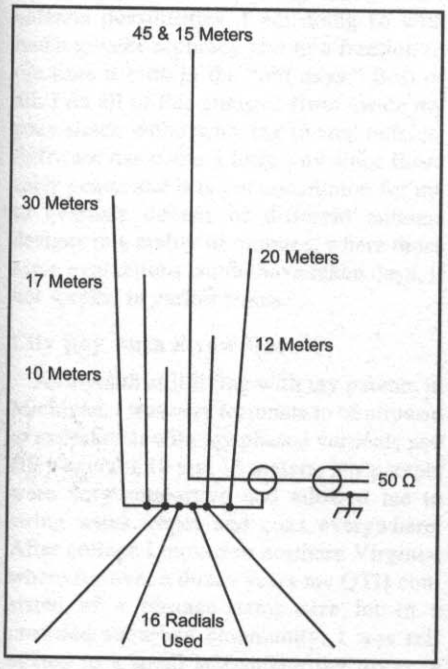

Fig 1—The configuration shown here also provides a good match on the bottom end of the 6-meter band. I've used it successfully during auroral and other band openings. It is probably operating on the 5th harmonic of the 30-meter element.

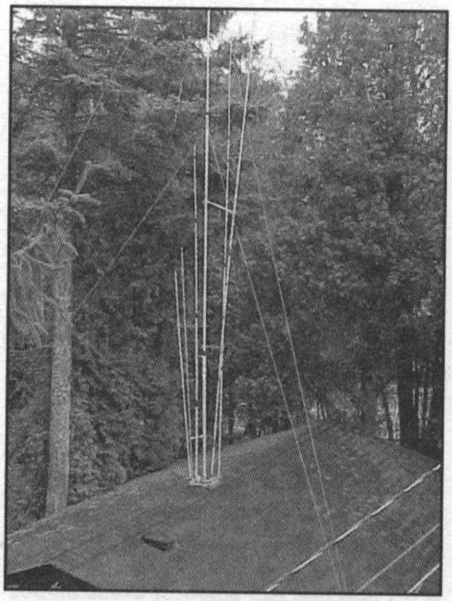

Fig 2—The completed antenna mounted on my roof. Insulated guys are used to brace the assembly in high winds.

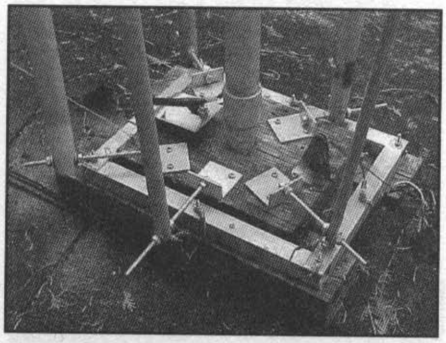

Fig 3—A low-impedance connection at the bottom of the vertical is required to tie the radials and the parasitic elements together. While I used square aluminum tubing, a sheet of copper or aluminum would probably work just as well. Note the threaded-rod and L-bracket fine-tuning adjustment system for each parasitic element. The threaded rod, bracket, nuts and washers are made of aluminum to avoid corrosion problems.

A spacing of about 6 to 7 inches between the bottom of the 40-meter radiator and the added elements would be a good starting point. An insulated spacer tied to the 40-meter vertical supports the new elements. The spacing at the top of the elements being added is not as critical and varies from about 16 to 30 inches. Using an antenna analyzer or VSWR bridge, adjust the spacing at the bottom initially and then the top until a 1:1 match is obtained. You might also have to make slight adjustments to the element length. Use the same procedure to add additional elements. The end result is an antenna that will work effectively on all bands without an antenna tuner.

Fig 4—The Plexiglas insulating brackets from the parasitic elements to the center 40-meter element. I've used this antenna successfully on all bands, although the bandwidth on 10 meters is limited to about 200 kHz.

Notes and References

[1] G. Breed, K9AY, "The Coupled-Resonator Principle: A Flexible Method for Multiband Antennas," *The ARRL Antenna Compendium, Vol 6* (Newington: ARRL, 1996), pp 109-112.

The Coax-Fed Dual-Band Collinear

By Gedas Vysniauskas, W8BYA
2030 E US 224
Ossian, IN 46777

Here's an easy-to-make, inexpensive bidirectional wire antenna with respectable gain on 40 and 15 meters. It needs no matching or tuning networks and covers both bands fully.

Background

One of my favorite past times is modeling and then building antennas for the HF bands. I can remember in the early 1980s some of the first BASIC programs introduced to amateurs to perform basic antenna modeling. My PC then was a *killer* TRS-80 Model 4 with an audiocassette port for storage and a whopping 64 kB of RAM. As rudimentary as that setup was, it allowed me to explore countless permutations of element spacing, phasing and current distributions for different antennas. My early experimentation eventually led to the construction of a variable-phase network 2-element vertical array for 40 meters that worked extraordinarily well.

With the help of today's more powerful PCs and software packages such as *EZNEC*[1] and *TLA*,[2] I am exploring many more antenna possibilities. I am doing so with much greater accuracy and in a fraction of the time it took in the "old days." Best of all, I do all of this analysis from inside my cozy shack without having to step outside. Software has come a long way since those early years, and it is not uncommon for me to evaluate dozens of different antenna designs in a matter of minutes, where those same evaluations would have taken days, if not weeks, in earlier times.

City Boy Buys Straw Hat

As a youth still living with my parents in Michigan, I was very fortunate to be allowed to experiment with my phased verticals and HF Yagis for 10 and 15 meters. My parents were very supportive and allowed me to string wires, ropes and coax everywhere. After college I moved to northern Virginia, where for over a dozen years my QTH consisted of a postage-stamp size lot in a crowded suburban community. I was relegated to a small self-supporting tower, a kW and a pair of huge 2-meter antennas that allowed me to keep in touch with friends back home, most of the time anyway.

While it was exciting to make QSOs so far away on 2-meter SSB, I really wanted to get back on the HF bands. However, without suitable trees and some room it was difficult to make something work really well for 40 through 160 meters.

Then several years ago I had an opportunity to move back to the Midwest. For my wife and I it was an opportunity to escape the frenzied pace of northern Virginia and come back a little closer to home. We purchased a beautiful home on a 6-acre rectangular lot approximately 1200 by 250 feet, running north to south, almost in the middle of nowhere. Cornfields are now our nearest neighbors. It was absolutely perfect for both of us and especially for my antenna dreams.

Immediately after moving in, I quickly installed three self-supporting aluminum towers, two 60 feet high and one 70 feet high, in a straight-line configuration running north to south. We separated each tower by 130 feet to make it easy to install full-sized dipoles for 80 or even 160 meters. The towers quickly became the support for an array of different antennas from VHF down through MF. We were indeed blessed with aluminum antennas for every band—high up in the air and in the clear.

One of the antennas was a commercial 2-element 40-meter Yagi, which I installed on the 70-foot tower with an R7 vertical 10 feet above it. Using that antenna, I was like a kid in a candy store. It allowed me to work many DX stations with excellent signal reports. Although the Yagi didn't have much F/B rejection, it did have a broad front lobe and a fairly low take-off angle. I almost worked DXCC on 40 meter during the very first night of the next SSB contest.

Straw Hat Gets Blown Off

Several months after I installed the 40-meter Yagi, a freak warm spell in the middle of December generated 100+ mph straight-line winds that destroyed every antenna I had installed. **Fig 1** shows what was left of my 40-meter beam and the R7 HF vertical mounted above it. What a mess.

I was apprehensive about rebuilding the Yagi and putting it back on the tower. Because the 2-element 40-meter Yagi didn't have much F/B and slightly less than

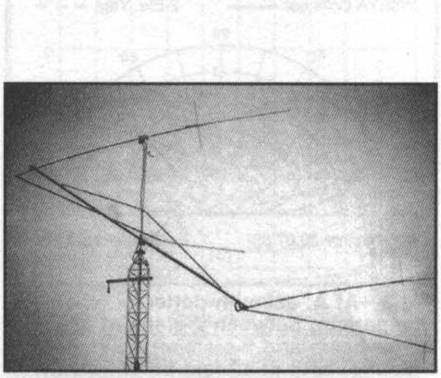

Fig 1—A sad sight—the destroyed 40-meter beam and R7 vertical.

3 dB more gain than a dipole, I decided to salvage the elements and make two separate dipoles. I installed one dipole at the 70-foot level favoring northwest to southeast while the other I placed at 75 feet, favoring northeast to southwest. An RF relay allowed me to switch between the two as needed. These two antennas became my reference antennas for 40 meters and were also a lot of fun to play with.

I was content for several weeks but eventually began thinking of ways to utilize the wide separation between the towers for an antenna with more gain on both 40 and 15 meters. For 40 meters, I wanted an antenna that had some directivity out to the east and west, but that had some side rejection to help cut down QRM from South America below 7.100 MHz.

For 15 meters, QRM isn't much of a problem for me, so I wanted an antenna with some gain in all directions. It would be great to work lots of DX without having to constantly rotate a beam antenna. My goals for the new wire antenna were as follows:

- Must work well on 40 and 15 meters. On 40 meters I wanted a bidirectional pattern to cover Europe, Africa and the South Pacific.
- Must provide more gain than my reference dipoles.
- Must provide some side rejection on 40 meters.
- Must provide a good match to 50-Ω coax.
- Must use no tuning or matching networks. My personal preference is to avoid using any tuner if at all possible, either at the antenna or in the shack. There's nothing wrong with tuners, but if I could design an antenna that would work well without one, it would be wonderful.
- Must cover most of the two bands with low SWR.
- Must fit between my existing three towers.
- Must be inexpensive and easy to construct.
- Must help me predict winning lottery numbers (just kidding).

Fig 2—At A, azimuth-pattern comparison between 2-element 40-meter beam and 2-element collinear antenna, both at 60 feet height. At B, the elevation pattern comparison for the same two antennas.

After documenting all of my requirements, I realized it was a pretty tall order. But it would certainly be an interesting project. With these requirements in mind, I set off on my hunt.

My Search for the Perfect Antenna

A short time into my modeling and analysis, I realized that the forward gain of my original 2-element 40-meter Yagi was not much greater than that of a 2-element collinear array. **Fig 2** shows just how close the two are according to *EZNEC*.

The more I analyzed different antennas and the more I read, the more I was convinced that nothing was going to meet all my requirements. However, collinear antennas kept coming back as a possibility. There were several collinear designs that I looked at that met many of the requirements, but not all. Although space was available for a truly long 4 or 5-element collinear antenna with lots of gain, I didn't like the very narrow azimuth pattern and the very high feed-point impedance these solutions provided.

The way my towers were positioned, I knew that a sharp azimuth pattern to the east and west would insure missing most of Europe and the Middle East and even some of the South Pacific. These larger collinear arrays had –3 dB beamwidths of less than 25° or so—very narrow indeed.

Traditional collinear antennas use a single transmission line and usually, but not always, an even number of phasing stubs to properly excite the adjoining elements. They are typically symmetrical antennas and the normal method of feeding one is to use a balanced wire line into an antenna tuner. This traditional view was heading in the wrong direction for me.

My modeling data showed that a 2-element collinear array, also commonly known as "two half-waves in phase" had a usable –3-dB azimuth beamwidth of up to 46° and required no phasing stubs. Unfortunately, it also presents a very high feed-point impedance (on the order of 4 to 5 kΩ) and would obviously need some form of tuner to match it to a 50-Ω system.

Eureka!

Then it hit me. My solution to this problem was to use a 2-element collinear array with each ½-λ element fed separately with its own length of coax. In my case, the antenna had a geometry getting closer to the Extended Double Zepp, with the exception that the two ½-λ elements were separated by 30 feet instead of a few inches. As shown in the 18th edition of *The ARRL Antenna Book* on page 8-32,[3] the larger separation helped increase the gain of the antenna. I quickly found that I could alter the sidelobe radiation pattern, the bidirectional gain and

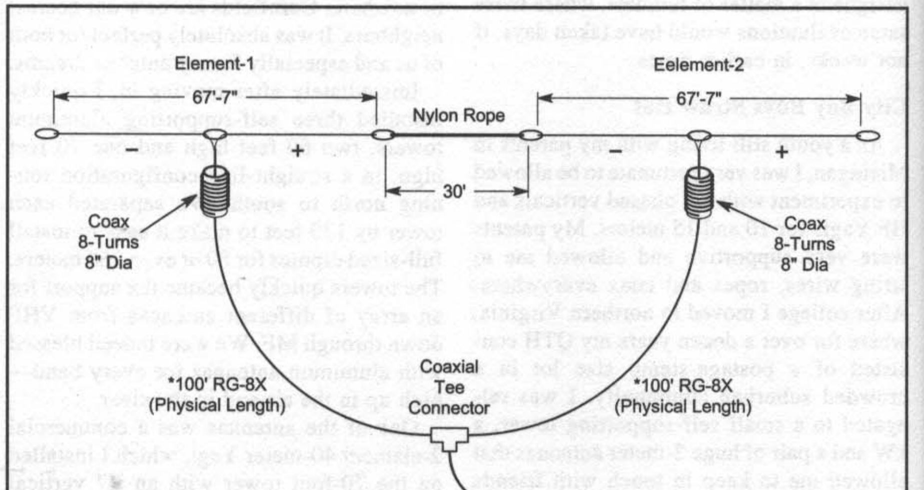

Fig 3—Layout of the 40-meter collinear array.

feed-point impedance just by varying the separation between the two. **Fig 3** illustrates the basic configuration and dimensions of the antenna.

The final choice of a 30-foot spacing is a compromise between all of the variables for the two bands. A slightly better theoretical match and slightly wider beamwidth can be achieved on 40 meters with less separation, at the cost of a little gain. The added separation increases the gain over that of a single dipole and results in a suitable feed-point impedance for my particular arrangement.

Figs 4A and 4B illustrate the azimuth and elevation patterns for the antenna on 15 meters. The azimuth pattern has ten lobes with narrow gaps in between, giving almost omnidirectional coverage.

Construction

Construction of this antenna system was simple. I made both ½-λ elements of insulated and stranded #14 THWN copper wire, cut to a length of 67 feet 7 inches. Heavier #12 wire should be used if you plan to use a coaxial cable heavier than the RG-8X I used to feed each element. Some slight pruning might be needed if you do use a different diameter wire too.

I fed each 1/2-λ element at the center with a 100-foot length of RG-8X coax, exactly the way you would make a normal dipole antenna. I had a roll of RG-8X available and initially thought it would be an ideal choice for this antenna (but read on). Taking into account the velocity factor of the coax I was using (78%), this length represented a full wavelength at 7.2 MHz.

Electrically, half of this coax length (an electrical λ/2, or 53.3 feet) would have worked from each element, but that length would not allow the coax to drop down from each element vertically to allow enough length for both ends to come together on the ground. The north end of my antenna was 70 feet above the ground while the south end was 60 feet high. (This difference in height slightly distorts the azimuth pattern by weakening the sidelobes to the north and strengthening the ones towards the south.) I used a pulley on each tower and some Nylon rope to raise and lower the ends and center as needed. I used three towers to support the two ends and center of the antenna system, but two supports could be used with slightly more sag.

When the element tips are separated by 30 feet, each ½ λ element had an impedance close to 80 Ω with very little reactance on 40 meters and an impedance of 95 – *j* 48 Ω on 15 meters. When both coaxes are placed in parallel with each other, the resulting feed-point impedance at the coaxial T connector is very close to 40 Ω on 40 meters and almost 50 Ω on 15 meters. This would result in a near perfect match to 50-Ω coax.

It was very gratifying that I only had to make one adjustment to the antenna lengths to arrive at its final configuration. If I had stuck to the dimensions given by *EZNEC*, I would have had to make no adjustments at all, but when it came time to cut the elements, I went from memory and mistakenly added 2 feet to each element. Once I removed the excess wire, the antenna SWR curves looked perfect and matched the curves predicted by *EZNEC*. **Fig 5** shows what the calculated and measured SWR performance of the antenna is on 40 meters. The SWR across 15 meters was not quite as good as on 40 meters, but it still resulted in an excellent SWR of less than 2:1 across the entire band. I measured a minimum SWR of 1.3 towards the high end of the band.

Some Advice

When you are determining the physical layout of your particular antenna setup, remember that the length of each coax feeder has to be the same and a multiple of an electrical half wavelength. This means that for a 40-meter version using coax with a velocity factor of 0.78, the possible lengths of coax have to be 53.3 feet, 106.6 feet, 159.9 feet, 213.2 feet, etc. If you're going to use a cable with a different velocity factor, don't forget to recalculate these lengths. Any type of coax, even 75-Ω or 62-Ω coax could be used with this antenna project. Use the following formula to calculate the length of a ½-λ transmission line: $L\,(1/2\ \lambda) = (492 \times VF)/F$, where F is the frequency in MHz.

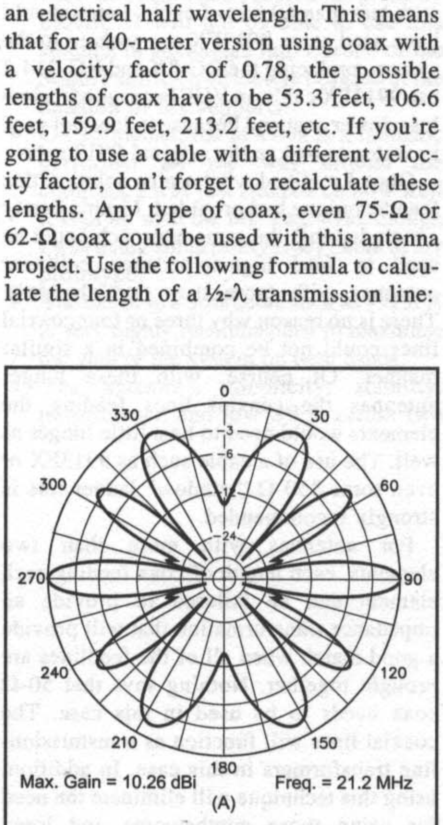

Fig 4—At A, azimuth pattern for the collinear array on 15 meters and at B, the elevation pattern.

For example, for my arrangement using RG-8X coax with a VF of 0.78 at 7.2 MHz the numbers were: $(492 \times 0.78)/7.2 = 53.30$ feet. For me, 53.30 feet is not long enough to make it to the ground from each element so I had to add another multiple of 53.30 feet of coax. This total came to 106.60 feet (rounded off to 107 feet).

The ends don't really have to make it to the ground. If you want to keep the coax losses to an absolute minimum, you could place the coax T connector 30 or 40 feet off the ground. It may be possible to use a pair of 1/2 λ lines especially if the VF is high enough.

I used a noise bridge to ensure that each line was 1 λ long at 7.2 MHz. Here's an important tip. Remember that a 1-λ long line at 7.2 MHz is a 1/4 λ long at 1.800 MHz. Also remember that a 1/4-λ line that is open-circuited at the far end will look like a short circuit on the input side. These relations will help you if you are going to use a noise bridge.

Once you have the two coax lines cut to frequency, you are ready to go. I started out with 110 feet of coax for each feed line to play it safe and found that I had to cut off 10 feet to make the 1/4 λ lengths at 1.800 MHz. My actual finished coax length for both elements was very close to 100 feet, indicating that the VF of the cable I was using was actually closer to 73% rather than 78%.

Because each balanced element is fed with an unbalanced coaxial line you should use a common-mode choke balun at each feed point. This will help keep unwanted RF currents off the coaxial line shield that could otherwise upset the radiation pattern of the antenna. To make the common-mode choke, coil up the feed-point end of your coax to make an 8-turn loop with a diameter of about 8 inches. Fasten the loops tightly together in several places with outdoor

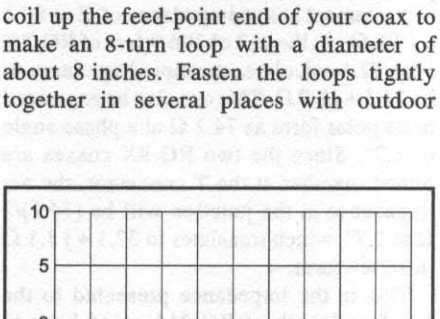

Fig 5—Calculated and measured SWR performance of the collinear across the 40-meter band for 100-foot-long phasing lines and 150-foot run of RG-214 to the transmitter.

electrical tape and put a tie-wrap over the tape to keep it from coming loose in the weather. After you've attached and soldered the coax to the $^1/_2\ \lambda$ elements, seal the connections with outdoor grade Silicone RTV.

It is crucial that the two-$^1/_2\ \lambda$ elements be fed *in-phase*. This means that the center conductor from each coaxial feed line must go to the same relative side of each element of the array. Think of the polarity of each of two batteries in series inside a flashlight. The two dipoles need to be fed (polarized) the same way. Here's an example of how to do it if you're not 100% sure of what that means. If the two elements are running north to south (as they are in my installation), make sure that the center conductor from each of the two feedlines goes to the north side of each antenna element. (Refer to Fig 3 for this detail.)

Down on the ground, put a PL-259 on each end of coax and bring the two ends together into a coaxial T connector. Don't forget to seal this connector with tape and RTV as well. My measured SWR performance was slightly better than that predicted by *EZNEC* on both 40 and 15 meters. A possible explanation for this may be due to the fact that *EZNEC* does not take into account resistive losses when it models transmission lines.

With the help of the *TLA* program that comes with *The ARRL Antenna Book*, and after the antenna was built and tested, I was able to calculate the losses in the entire system. I was surprised by the losses of the coax I had chosen. If I had performed these calculations before I built the antenna I would have used a different coax from each element and to the shack. On 40 meters the calculations went as follows:

At 7.200 MHz *EZNEC* calculates that each element has an impedance of $Z = 80.3 + j\,3.8\ \Omega$. At the end of 106.7 feet of RG-8X coax *TLA* calculates the input impedance to be $74.1 + j\,2.2\ \Omega$. This can also be expressed in its polar form as 74.1 Ω at a phase angle of 1.7°. Since the two RG-8X coaxes are joined together at the T connector, the net impedance at the junction will be (74.1)/2 Ω at 1.7°, which translates to $37.1 + j\ 1.1\ \Omega$ in series form.

This is the impedance presented to the 150-foot length of RG-214 going back to my shack. Again using *TLA*, the resulting impedance at the shack end of the RG-214 comes to $56.5 + j\ 11\ \Omega$. The total losses in the system according to *TLA* are as follows: 0.87 dB in each of the RG-8X cables and 0.84 dB loss in the RG-214 cable. The total coaxial loss is thus 2.58 dB on 40 meters. These losses can be minimized to a total of approximately 1 dB if a cable such as Cable-Experts 9913FX[5] is used in place of the RG-8X and RG-214.

Similar calculations at 21.3 MHz reveal that the total coaxial loss using the RG-8X and RG-214 is 5.2 dB. This is not an insignificant amount of loss. The peak gain of the total system becomes 10.26 dBi – 5.2 dB or 5.06 dBi gain. It is a shame to see the high gain of this antenna eaten up by coaxial losses. Again, if you switch over to a cable like 9913FX the total losses can be held to less than 2.3 dB, resulting in a total system gain of almost 8 dBi on 15 meters.

What Does All This Mean?

In my situation, I used a convenient and partially underground 150-foot length of RG-214 cable to make it out to the T connector. Its original function in life was to feed a 160-meter dipole antenna at the top of the center tower and I expected its losses to be less than a dB on that band.

For this antenna project, I should have actually run a new and shorter length of cable from the shack to the T connector. Because the T connector is on the ground I think that I could have actually made the trip with less than 60 feet of cable. I also should have used some 9913FX *everywhere* in the system, replacing the RG-8X and RG-214. I use 9913FX cable on VHF because of its low loss, lower cost and because it does not suck in water as bad as the original 9913 cable.

Once I realized what a nice solution this feed technique had provided, I immediately concluded that the same approach could be used to feed high-impedance collinear antennas with more than two elements. There is no reason why three or four coaxial lines could not be combined in a similar manner. Of course, with these longer antennas the coaxial lines feeding the elements would need to be a little longer as well. The use of a cable such as 9913FX or even some 450-Ω "window" ladder-line is strongly recommended.

For antennas with more than two elements, each length of coax feeding each element can be tailored to provide an impedance transformation that will provide a good match when all of the feedlines are brought together. Nothing says that 50-Ω coax needs to be used in this case. The coaxial lines will function as transmission-line transformers in this case. In addition, using this technique will eliminate the need for using those cumbersome and lossy phasing stubs between elements.

40-Meter Test Results

The following test results are the generalized differences I have seen between the collinear antenna and my reference dipoles over the past several months. When distant stations were to the east or west of me, I used my east-west dipole as the reference antenna. When stations were to the north or south of me, I used my north-south dipole as the reference antenna. I tried not to rely on high-angle reports on 40 meters during the daytime.

On both 40 and 15 meters my transmitted power never exceeded 100 W. The 40-meter dipoles are fed with a 300-foot length of 9913FX, which results in a 1 dB loss for the reference antennas. The peak gain for the reference dipoles taking into account this slight loss is approximately 6.2 dBi.

I generally see the same difference between the two antennas on transmit that I see on receive. There were, of course, times when there were slight differences between the two antennas. I tried to avoid the quick A/B comparison test since QSB differences can destroy good data. In an effort to offset the effects of QSB, I gave the other station several minutes of chatter using both antennas and asked them to report on the overall average and signal peaks for both.

On-the-air tests on 40 meters were interesting. The antenna definitely shows a low-angle bidirectional lobe to the east and west and has a noticeable 10 to 15 dB null to the South. This situation has helped me copy some weaker E-W DX stations in the presence of stronger signals from South America below 7.100 MHz. In this respect, the antenna has performed well. Because of the small number of distant stations to the north of my location I could not confirm a good null to the north.

West Coast and VK stations generally reported seeing anywhere from 0 to 6 dB in favor of the collinear compared to the E/W reference dipole. Most of the US stations to the east of me reported seeing very little difference, if at all, between the two. This could be because of the closer distance and thus higher radiation angle needed between my QTH and the East Coast. It was gratifying that not one report was less for the collinear in the east or west directions within the US.

At worst, the two antennas were the same. This was somewhat surprising, considering that the reference dipole is on the average 15 feet higher than the collinear antenna. Stateside stations from the southwest to the southeast (with the exception of close-in stations) reported anywhere from 10 to 15 dB less signal from the collinear, which confirms the nice null that was predicted to the south.

A big disappointment was with the results from Europe. Here, the antenna did not have a wide-enough azimuth beamwidth to cover this area well. Most European stations reported a difference of at least 6 to 12 dB in favor of the dipole. However, when distant stations were in-line with the main lobe, such as from South Africa, these stations reported seeing differences of between 3 to 6 dB in favor of the collinear. It appears the antenna certainly has a narrow beamwidth to the east and west.

15-Meter Test Results

On-the-air tests on 15 meters were really surprising, and even more encouraging than those on 40 meters. On 15 meters the antenna exhibits many peaks and nulls around the compass. It can almost function as an omnidirectional antenna. For 15 meters, my reference antenna is a commercial 10-12-15-17-20 meter, 10-element trapless Yagi with four active elements on 15 meters. This antenna is mounted at 60 feet and has a 20-foot boom. I feed it with a 300-foot length of 9913FX. I do not have a model for this antenna so I cannot provide a theoretical difference between the two antennas.

In some respects, it was more difficult to get accurate reports on 15 meters because many of the reports were under S9 for both antennas. I know from calibrated measurements taken on my FT-990 that 1 S unit could mean anything from 2 or 3 dB down at the low end of the S meter to 5 or 6 dB at the S9 end of the meter. The dB scales above S9 are right on the money, however. Most of the reports on 15 meters were under the S9 mark, while most of the reports on 40 meters were over the S9 mark.

Stations in Asia reported anywhere from 3 to 6 dB in favor of the Yagi. However, stations to the southwest of me in Mexico, the Southwest US and the South Pacific usually heard both antennas at exactly the same strength. Many times the other station could not tell any difference at all between the two antennas. To the West Coast, there were several times when the collinear was louder by 3 to 6 dB. Stations in Europe reported an average difference between 0 and 6 dB in favor of the Yagi. Reports from South America also gave the Yagi a 0 to 6-dB advantage.

On many occasions, during some of my longer QSOs, I performed the same test later in the QSO and the differences were switched almost opposite from the initial results. It became clear to me that aside from differences due to QSB, on 15 meters the two antennas were almost identical in virtually every direction. This was an unexpected result. I was not expecting such a good performer on 15 meters using lossy coax! It was really nice not to have to rotate the beam to talk to different stations located in different parts of the world. This simple wire antenna was very competitive with the commercial Yagi antenna.

Wrapping It Up

My conclusions regarding this antenna are as follows:

- On 40 meters the antenna shows a very sharp bidirectional pattern that needs to be aimed just right if good results are to be expected. I saw no reason to disagree with the beamwidth predictions given by *EZNEC*. I will not be able to use this antenna to advantage into Europe or the South Pacific on 40 meters because of the location of my supports.
- On 15 meters, the antenna is a fantastic performer all the way around the compass. I was just amazed on how well it kept up with the big Yagi even though I was using some pretty lossy cable in my prototype.
- The use of low-loss cable such as 9913FX is very highly recommended to maximize the gain of the system on both bands.
- The antenna's simplicity, stability, performance and low SWR across two bands make it an effective and fun antenna to operate.
- Its total cost of less than $30.00 (less coax) makes it a great value.

In the future, I plan to look at a way to make the antenna more omnidirectional on 40 meters. I believe this is possible by lengthening each element to $^3/_2\,\lambda$. This configuration would make the antenna look exactly the same way the current 40-meter antenna looks on 15 meters. Some quick modeling reveals that this should be possible.

Collinear and other multi-element driven antenna arrays have been around for a long time. Although I have not seen this particular arrangement described in the literature I subscribe to, it does not mean that someone has not done exactly what I have done here. The intent of this article was to share with others an easy solution to a common problem—How to feed a high-impedance collinear antenna without the use of phasing stubs, balanced feeders or an antenna tuner.

I would like to thank my very good and life-long friend Jack King, K8MA, for his support and assistance over the years.

Notes and References

[1] *EZNEC* V2, Antenna Analysis Software, by Roy Lewallen, W7EL. The latest version is Version 3.0 for Windows. See **http://www.eznec.com/index.shtml**.

[2] *TLA* program supplied with the 18th Ed. of *The ARRL Antenna Book*. [A more modern, Windows program called *TLW* (Transmission Line for Windows) is bundled with the 19th Ed.—*Ed.*]

[3] *The ARRL Antenna Book*, 18th Ed. (Newington: ARRL, 1997), page 8-32.

Modifying the K3LR Three-High Single-Band Stack Switch

By Al Christman, K3LC
Grove City College, 100 Campus Drive
Grove City, PA, 16127-2104

K3LC fine tunes K3LR's stack-control system.

Like many others, I read and enjoyed the two-part article on Tim Duffy's three-high stack switch for monoband beams, which was published in the Sep and Nov 1998 issues of *CQ Contest* magazine.[1,2] Tim's design makes clever use of quarter-wave sections of transmission line, which function as impedance transformers. When connected either alone or in parallel combinations, these transmission-line transformers (TLTs) have low loss and provide reasonable bandwidth. After reviewing the material several times, I realized that the initial design could be modified to provide better performance. This article gives the details.

Background

Fig 1 shows the schematic diagram of the "outdoor" relay-box that was presented in Part 1 of the original article. To drive any *single* antenna, relays K4 and K5 are both OFF, thus inserting the 50-Ω TLT in series with the main line to the shack. To drive *all three* antennas simultaneously, relay K4 should be ON, but K5 must be OFF, placing the upper 75-Ω TLT in parallel with the 50-Ω TLT. The resulting TLT has an impedance of 30 Ω, which will exactly match an 18-Ω load to a 50-Ω feeder. The three 50-Ω antennas, when paralleled, present a net impedance of 16.67 Ω, which is close to the 18-Ω value calculated above.

When feeding any *pair* of antennas, relays K4 and K5 are both ON, which places the two 75-Ω TLTs in parallel to yield a TLT whose characteristic impedance is 37.5 Ω. As Tim points out in Part 2 of his 1998 article, this 37.5-Ω value isn't ideal because it matches 50 Ω to 28.1 Ω, rather than to 25 Ω, which is the load impedance that should appear when two identical 50-Ω antennas are driven from a common point.

An Improved Three-High Circuit

A better solution is to replace the lower 75-Ω TLT shown in Fig 1—the line attached to the NO (normally open) contacts of K5—with a 35-Ω TLT constructed from RG-83 coax.[3] K3LR mentions this strategy when discussing his two-high stack switch, and the same idea works just as well in this application. A single 35-Ω TLT will match 50 Ω to 24.5 Ω, a value which is much closer to the actual 25-Ω impedance presented by a pair of 50-Ω antennas driven together in phase.

The schematic for such a modified "outdoor" relay box is given in **Fig 2**. No changes need to be made inside the box itself; just substitute a 35-Ω TLT for the lower 75-Ω TLT in the drawing. This modification may increase the cable costs a bit, because of the need to purchase a quarter-wave section of the more-exotic RG-83 transmission line, but the resulting impedance match is better.

Relay activation is the same as before, if either a single antenna or all three antennas need to be driven. Now, however, you need to energize only relay K5 (rather than both K4 and K5) in order to feed any pair of antennas. Tim's original "indoor" control-box, whose wiring is displayed in **Fig 3**, must therefore be re-configured slightly, by removing the steering diode that bridges the K4 and K5 control lines. (I have circled this diode in the drawing.) **Table 1** shows how the seven-position rotary switch functions

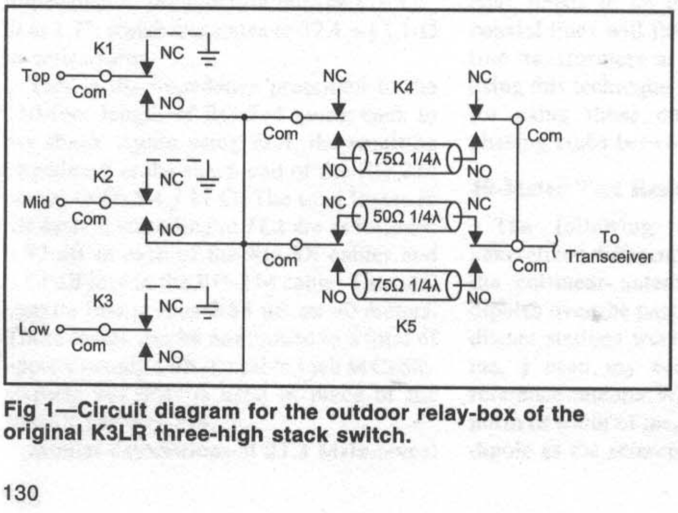

Fig 1—Circuit diagram for the outdoor relay-box of the original K3LR three-high stack switch.

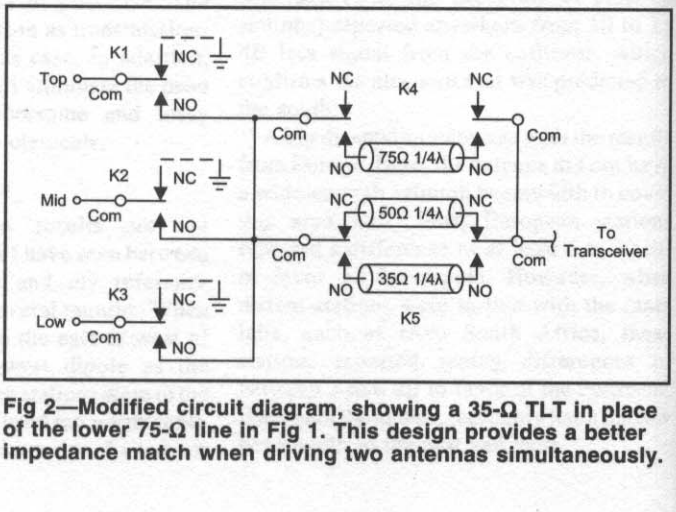

Fig 2—Modified circuit diagram, showing a 35-Ω TLT in place of the lower 75-Ω line in Fig 1. This design provides a better impedance match when driving two antennas simultaneously.

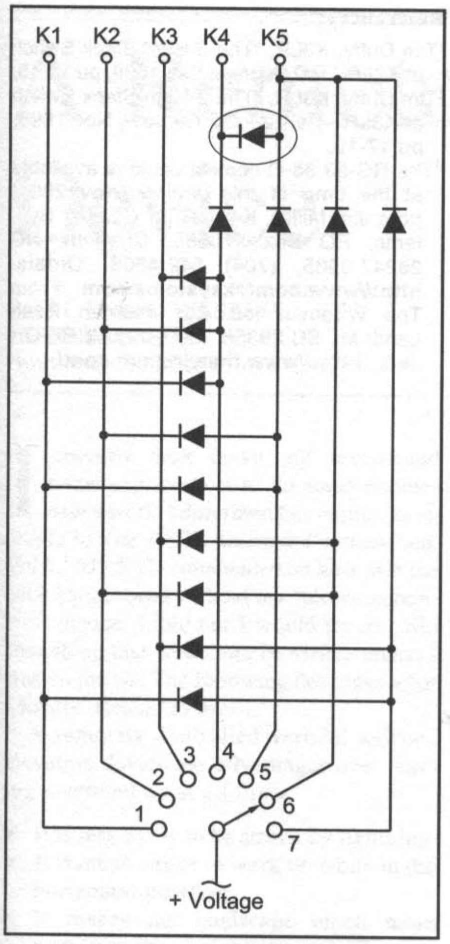

Fig 3—Circuit diagram for the indoor control-box used with the original K3LR three-high stack switch. The diode that connects the K4 and K5 control lines must be removed to enable this circuit to function properly with the relay-box of Fig 2. This diode is circled in the drawing.

Table 1
Operation of the Antenna Selector Switch in Fig 3

Switch Position	*Active Antenna*
1	Top
2	Mid
3	Low
4	Top + Mid + Low
5	Top + Mid
6	Mid + Low
7	Top + Low

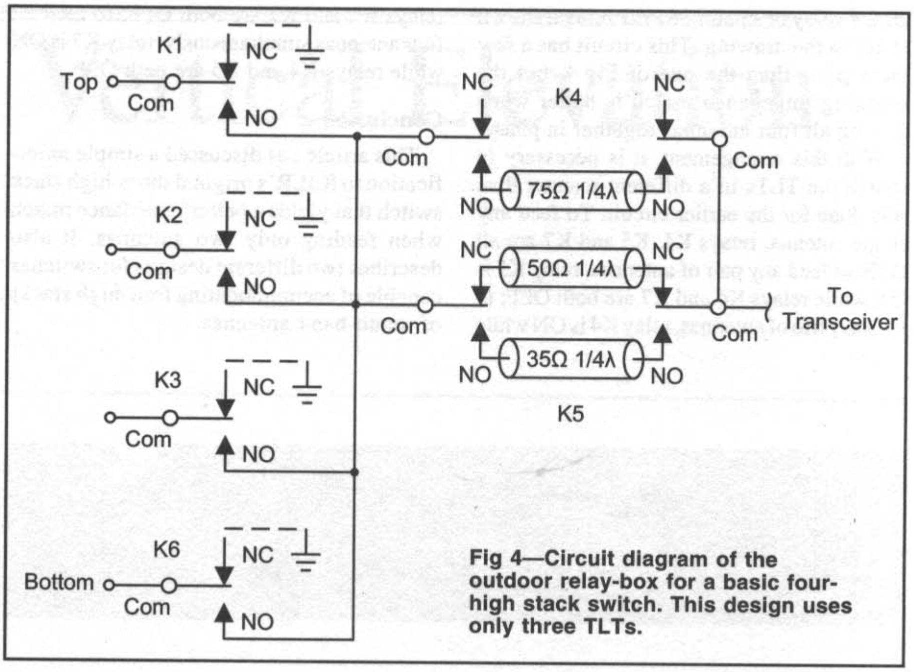

Fig 4—Circuit diagram of the outdoor relay-box for a basic four-high stack switch. This design uses only three TLTs.

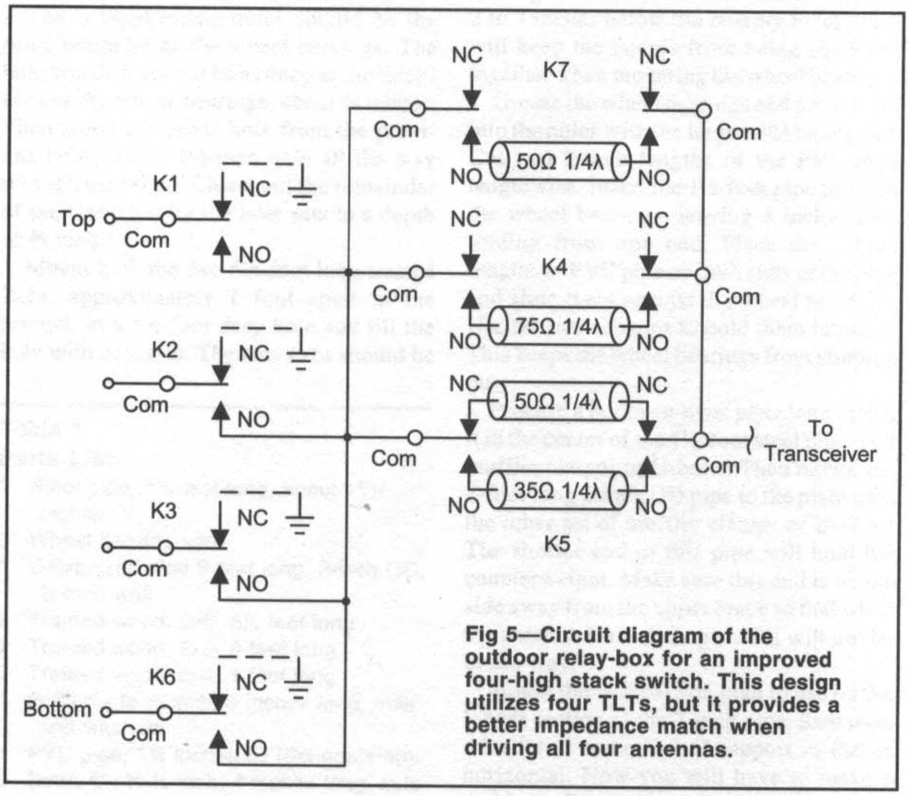

Fig 5—Circuit diagram of the outdoor relay-box for an improved four-high stack switch. This design utilizes four TLTs, but it provides a better impedance match when driving all four antennas.

to drive various combinations of antennas.

A Four-High Circuit

The three-high circuit of Fig 2 can readily be expanded to allow the switch to be used with a four-high stack of monoband antennas, as shown in **Fig 4**. Calculations indicate that, if we simply parallel the new 35-Ω TLT with the remaining 75-Ω TLT, we get a net TLT impedance of 23.86 Ω. To feed all four beams simultaneously in phase, ideally we would want a TLT whose impedance is 25.0 Ω, so our actual value of 23.86 Ω is pretty close.

To feed a single antenna with this setup, relays K4 and K5 are both OFF; to feed any pair of antennas, relay K4 is OFF while K5 is ON; to feed any trio of antennas, relay K4 is ON while K5 is OFF; to feed all four beams at once, relays K4 and K5 must both be ON.

An Improved Four-High Circuit

Of course, we can easily achieve an exact TLT impedance of 25 Ω just by paralleling two 50-Ω TLTs. The corresponding circuit, given in **Fig 5**, requires either an additional

DPDT relay or a pair of SPDT relays, shown as K7 in the drawing. This circuit has a few more parts than the one of Fig 4, but the resulting impedance match is better when driving all four antennas together in phase.

With this arrangement, it is necessary to switch the TLTs in a different manner than was done for the earlier circuit. To feed any single antenna, relays K4, K5 and K7 are all OFF; to feed any pair of antennas, relay K5 is ON while relays K4 and K7 are both OFF; to feed any trio of antennas, relay K4 is ON while relays K5 and K7 are both OFF; to feed all four antennas simultaneously, relay K7 is ON while relays K4 and K5 are both OFF.

Conclusion

This article has discussed a simple modification to K3LR's original three-high stack switch that yields a better impedance match when feeding only two antennas. It also describes two different designs for switches capable of accommodating four-high stacks of mono-band antennas.

References

[1] Tim Duffy, K3LR, "The 3-High Stack Switch at K3LR," *CQ Contest*, Sep 1998, pp 14-15.

[2] Tim Duffy, K3LR, "The 3-High Stack Switch at K3LR - Part 2," *CQ Contest*, Nov 1998, pp 17-19.

[3] The RG-83 35-Ω coaxial cable is available at the time of this writing (Nov 2001) from Jim Miller, K4SQR, at Comtek Systems, PO Box 470565, Charlotte NC 28247-0565, (704) 542-4808. Orders: **http://www.comteksystems.com**. From The Wireman Inc, 261 Pittman Road Landrum, SC 29356, (800) 727-WIRE Orders, **http://www.thewireman.com/**.

A Remote Vertical Elevation Device

Paul I. Protas, WA5ABR
15709 Seattle St
Houston, TX 77040

Here's a way to lean down your vertical to keep it really low profile!

I recently took down my seven-band homebrew vertical to do some maintenance work. I described this vertical in an article in *The ARRL Antenna Compendium, Vol 5.*[1] My XYL commented on how nice the back yard looked without my "close-encounters" device. I told her I would try to build something that would not be visible unless I was on the air. The following describes what I finally decided to use.

A remotely controlled vertical antenna elevation device has advantages over leaving a vertical up at all times.

- It is less likely to be struck by lightning.
- It is much easier to work on while in the horizontal position.
- It makes the landscape much more attractive (less neighbor and XYL complaints).

My remote elevation mechanism is much more appropriate for verticals without traps, because when the vertical is stored in the horizontal position water can get into the traps. I tried this with an R-7000 Vertical and it stopped functioning after it rained. A Butternut HF series vertical or the homebrew one I described in my *Antenna Compendium* article would be much more dependable.[1] Weight is also a factor that affects construction and the choice of rotators to use.

The following description is only a guide. There is much leeway for the experimenter to vary and/or improve it for his or her particular situation.

Construction

Table 1 lists the material needed for construction. I suggest that you take the 1½-foot long steel pipe (first item in Table 1) to an auto parts store and have them find a set of wheel bearings that have the same inside diameter as the OD of the pipe. In my case, I used $1^{5}/_{16}$-inch bearings.

Assuming that your rotator is designed for on-pipe mounting, drill two holes in the 2×6s, two inches from the top and in the center of each board. (If your rotator is designed to mount on a flat plate inside a tower, measure 4 inches from the top. See the alternate mounting diagram in **Fig 1**.)

The wheel-bearing holes should be the same diameter as the wheel bearings. The hole you drill should be as deep as the thickness of the wheel-bearings, about ¾ inches. Then using the guide hole from the previous hole, drill a 1½-inch hole all the way through the board. Chisel out the remainder of the wood left by the hole saw to a depth of ¾ inch.

Mount both the two 6½-foot long treated 2×6s, approximately 1 foot apart in the ground, in a 1½-foot deep hole and fill the hole with concrete. The two 2×6s should be parallel to each other and perfectly vertical. See Fig 1. Add a 2×4 brace to the 2×6s about 2 to 3 inches below the bearing holes. This will keep the boards from being squeezed together when mounting the wheel bearings.

Table 1
Parts List

1	Steel pipe, 1½ feet long, about $1^{5}/_{16}$ inches OD
2	Wheel bearing sets
1	Galvanized pipe 8 feet long, 2-inch OD, ¼-inch wall
2	Treated wood, 2×6, 6½ feet long
1	Treated wood, 2×6, 8 feet long
2	Treated wood, 2×4, 1 foot long
4	Bolts $^{5}/_{16}$ to ½ inch, 5 inches long, nuts and washers
1	PVC pipe, 1¼ inches ID (Schedule 40)
2	Bolts, $^{5}/_{16}$ to ½ inch, 4 inches long, nuts and washers
8	Wood screws, $^{5}/_{16}$ to ½ inch, 4 inches long, nuts and washers
1	Boom-to-mast plate, 4×6 inches (Commercial or fabricated from ¼-inch steel plate or aluminum)
4	U-bolts or muffler clamps (2 inch or 1½ inch)
4	Nails, 3 to 4 inches long.
2	Automotive hose clamps, 1½ inches ID PVC pipe to bury cables, if necessary

Grease the wheel bearings and press them into the holes with the larger side facing out. Cut two 2-inch lengths of the PVC pipe lengthwise. Insert the 1½-foot pipe through the wheel bearings, leaving 3 inches protruding from one end. Place the 2-inch lengths of PVC pipe on both ends of the pipe and slide them against the wheel bearings. Use the hose clamps to hold them in place. This keeps the wheel bearings from slipping out.

Procure a boom-to-mast plate, and attach it in the center of the 1½-foot steel pipe with muffler clamps or U-bolts. Then mount the 8-foot long 2-inch OD pipe to the plate with the other set of muffler clamps or U-bolts. The shorter end of this pipe will hold the counterweight. Make sure this end is on the side away from the upper brace so that when the antenna is rotated upward it will not be in the way.

Mount the vertical you plan to use on the longer section of the 2-inch pipe. Rest it on a ladder or some sort of support so that is horizontal. Now you will have to make a mold to fit on the pipe to accept the concrete for the counterweight. You can leave the counterweight on after pouring the concrete or take it off. This will change the balance of the device, but that can be adjusted by loosening the nuts on the boom to mast mount and sliding the 2-inch pipe forward or backward for a perfect balance. I made a five-sided box from ½-inch pine, which I had available from another project. The mold should be rectangular in shape

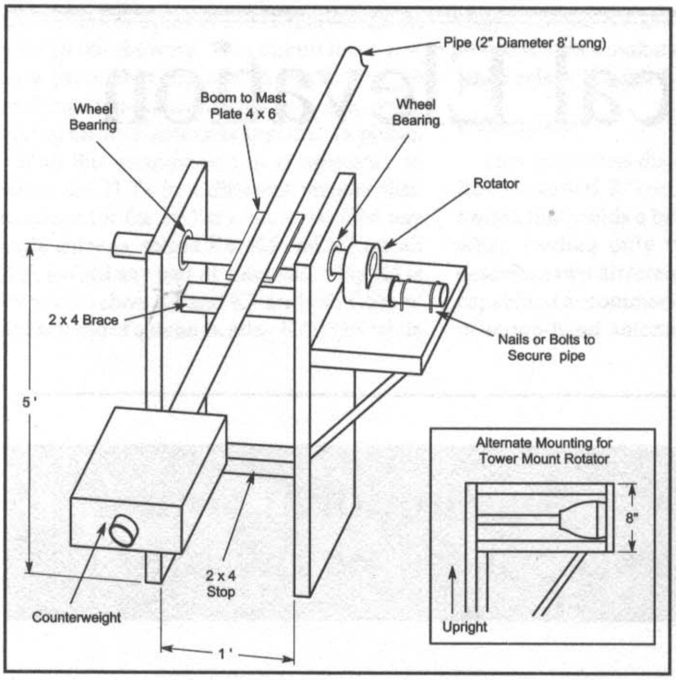

Fig 1—Drawing of the WA5ABR rotating hide-away vertical system.

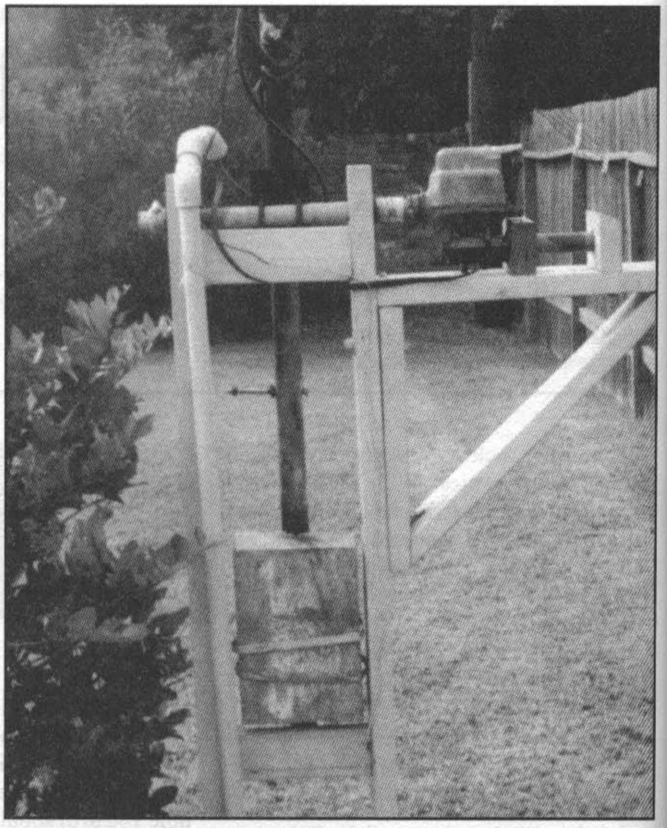

Fig 2—Photograph of completed installation at WA5ABR. Note the concrete counter-weight at the bottom of the vertical pipe.

and approximately 10×10×18 inches.

One of the 10×18 sides will be left open for the concrete. The box should be glued and nailed securely. Drill a 2-inch hole in the smaller ends (10×10) exactly in the center. Drill two holes in the short end of the 2-inch pipe, at about 5 inches and 12 inches from the end. One hole should be through the top and the other through the side (at 90° to each other). Slide the box over the short end of the 2-inch pipe so that the holes in the pipe are inside the box. Thread one nut on each of the 5-inch bolts to within 1½ inch of the head. Then insert the bolts through the holes and tighten with the other nut. This will keep the counter-weight from rotating around the pipe.

Mix the concrete and start pouring it into the box, keeping it level. Remove the ladder or other support for the vertical at the other end. Continue to add concrete until the system is balanced. When the concrete is dry, you can rotate the system to be vertical and nail a 2×4 between the two supports near the bottom of the pipe. This will act as a stop when you use the rotator to keep it from going over in the other direction.

When the system is perfectly balanced, you can push on the counterweight with one finger and rotate it to the vertical position. However, to rotate it up by turning the pipe is an entirely different matter. The mechanical advantage is very low and the torque required is high. I am currently using an ancient Alliance U-100 rotator that does an excellent job with the homebrew antenna shown because it only weighs about 10 pounds.

Most of the commercial verticals weigh at least 18 pounds and will require a much heavier-duty rotator. Something like the HyGain AR-40 or CD-45II would probably be satisfactory, since they both have a base for pole mounting. If you have a rotator with a tower-mount base, you will have to provide a flat vertical board on the end of the horizontal portion of the rotator platform. You should also put a top brace coming back from the end to the upright for more strength. Again, see the alternate mounting setup in Fig 1.

Build the rotator support by first mounting the rotator onto the pipe that rotates the vertical. Then mount a short length of pipe to the base of the rotator. Measure a 2×6 board to be a little longer than the distance from the upright to the end of the rotator mount pipe. Then make a board to be the diagonal support with 45° cuts on each end. Finally, add a board to be the vertical support between the horizontal shelf on the top and the diagonal support on the bottom.

Use large screws to secure the horizontal shelf to the vertical support. Hex-head bolts can be used to secure the horizontal shelf to the diagonal shelf and the diagonal shelf to the bottom of the vertical support. You will have to countersink these holes the depth of the heads so the vertical support will fit flush to the upright.

I used two 2×6 boards about 4 inches tall to hold the mounting pipe for the rotator. Drill holes to fit the pipe in each piece and mount them with large hex-head screws from the bottom. You might also glue these down with carpenter's glue for extra strength. My installation has a piece of scrap metal holding the rotator in place so that it cannot shift when moving the vertical. The same can be accomplished by drilling a horizontal hole through at least one of the supports and the pipe and inserting a nail or a large screw.

Once you finish this, you can connect the coax to the vertical and the rotator cable to the rotator and the control box inside the shack. **Fig 2** is a photograph of my completed installation. You may decide to use PVC pipe to bury the cables going back to the shack.

I have used this device for at least a year with no trouble at all. Happy hamming!

NOTES AND REFERENCES

[1] See *The ARRL Antenna Compendium, Vol 5* (Newington: ARRL, 1996), pp 113-115.

Building HF Dipole Antennas to Withstand Stresses of Mounting in Trees

By Jack Warren, WB4MDC
4 Tomahawk Dr
Merrimack, NH 03054-2335

Trees are convenient supports for wire antennas but they also sway to and fro in the wind, putting a lot of stress on your antennas. Here's how WB4MDC handles the situation.

The mechanical aspects of building, erecting, and maintaining antennas have always concerned the newcomer to the ham-radio hobby. Knowing how antennas work is an important part of being able to pass the licensing exams, but knowing how to build and install an antenna that can withstand harsh weather is usually left to chance.

In this article I'll describe the materials and construction techniques I've used to build simple high-frequency dipole antennas that have stayed up for many years with little maintenance.

Antenna supports

High frequency (HF) antennas are rather large for the lower frequencies, so various structures have become standard antenna supports. For example, a house and a detached garage make a satisfactory pair of supports for a dipole *if* they are far enough apart. Here in the "frozen north," the practical place to build a garage is right next to the house. Whether they share a wall or are connected by an enclosed walkway, they're too close to stretch out a 75-meter dipole, for example.

Guyed or self-supporting towers pose their own unique set of installation issues. The initial cost of the tower and all of the attendant items required for installation and any political issues (neighborhood restrictions, local building codes and permits, etc) can make for a long, involved project.

Poles and masts have to be supported in some way before they can be used to support an antenna. Guy wires or ropes and/or house brackets can be used, but these items add to the complexity of installing an antenna.

Trees are another possibility—ah wonderful trees! If you have a couple of suitable trees available use them. Trees are already installed, so to speak. The height at which an antenna is mounted doesn't change. With a little bit of cleverness, an antenna can be installed from the ground. The only drawback to using a tree or two to support a dipole antenna is that *they sway in the wind*!

Materials

So what kind of materials should be used to build an antenna that ties two trees together? Let's start with the wire. Any conductor can be used for the radiating portion of the antenna. However, the flexing encountered in this environment precludes using rigid conductors like tubing or rods. Flexible wire conductors made of steel or copper can be used. Steel wire is much stronger than copper, but copper is a better conductor. Combining the two provides the best overall performance. So copper-plated steel wire with a wire gauge of either #12 or #14[1] should work nicely.

Insulators

A dipole antenna consists of two pieces of wire separated by an insulator. The outer ends of the wires are insulated from their supports. There are two types of insulators adequate for the job. The first is a *tension* insulator and the second is a *compression* insulator. Their names are derived from the way they are used.

A hole passes through the body of a tension insulator near each end. The wires are threaded through these holes and when the antenna is stretched out, the strength of the insulator material is the only thing keeping the insulator from being pulled apart. If it breaks, the antenna can fall.

A compression insulator or *egg* insulator also has two holes. However, the holes are placed at 90° to each other and there are two groves from each hole going the full length of the body and ending at the far end of the insulator. Each wire is threaded through a hole in the egg insulator and is placed in a grove, folded back in the grove on the other side of the insulator, where the end is wrapped around the body of the wire.

The result is effectively two wires, each with a loop similar to two links of a chain. The wire loops are held apart by the insulator. In this case, when the wires are stretched out the insulator is squeezed or compressed. If the insulator breaks, the intertwined wire links keep the antenna from falling. Egg insulators are preferred when there is a chance of insulator breakage due to variations in tension—for example, when the trees sway.

Construction

With the right kind of wire and insulators, a sturdy dipole antenna can be constructed that can withstand the tug of two trees swaying in opposite directions. Attaching the feed line to the antenna and hanging the antenna between the trees are the remaining items. Balanced feed line (ladder line or twin lead) can be directly attached across the center insulator with little concern for weather proofing, but coaxial cable can be ruined if not properly treated. Please see my article on weatherproofing antenna connections.[2]

Installation

Just about anything can be used to secure a dipole between two fixed structures. However, supporting the ends of a dipole between trees that are always moving dictates the use of a flexible material. Rope is certainly a better choice than wire, even stranded wire. And selecting the right kind of rope means the difference between having the antenna stay up months versus years.

Hemp rope is organic. It doesn't stand up to weathering like ropes made from some of the modern manmade fibers. There are significant differences among the various manmade fibers also.

Cost is a reasonable indicator of usefulness. Polypropylene rope is available from many sources and is rather inexpensive, but it disintegrates in a very short time due to the ultraviolet light coming from the sun. Nylon rope has higher resistance to ultraviolet light, but has lower electrical resistance when compared with other manmade fibers. Polyester and Dacron are excellent outdoor and sunlight-resistant performers. These two kinds of ropes are more difficult to find and are more expensive than other types of ropes mentioned, however their superior performance justifies their higher cost.[3]

Dipole Antenna Example

The following example describes the 75-meter dipole I've been hanging between trees for the last 25 years, at three different homes in two different states. I used #14 copper-clad steel wire and three egg insulators for the antenna and polyester rope and trees for support. Even with the greater strength afforded by selecting these materials for the antenna, I decided to rig a pulley system to support one end of the dipole. This helps maintain a more constant pull on the antenna during windy conditions. **Fig 1** shows a drawing of the pulley system.

When two trees are spaced far enough apart to suspend a 75-meter dipole, a gust of wind can push the first tree and while it is rebounding, the other tree is being hit by the same gust, causing the trees to sway either away from or toward each other, but rarely in step with each other. My pulley system automatically adjusts the length of rope the antenna needs at any given time.

By experimentation I found I needed about 14 pounds of pull to sufficiently suspend the dipole with the feed line attached. This is well below the recommended maximum ratings for all parts of the antenna. I looked around in our recycle bin and found a one-gallon plastic jug with a screw-on cap and a built-in handle. I decided to use sand to fill the jug. Unfortunately the jug only holds 11 pounds of sand and I needed at least 14 pounds of pull, so I decided to use the mechanical advantage of two pulleys.

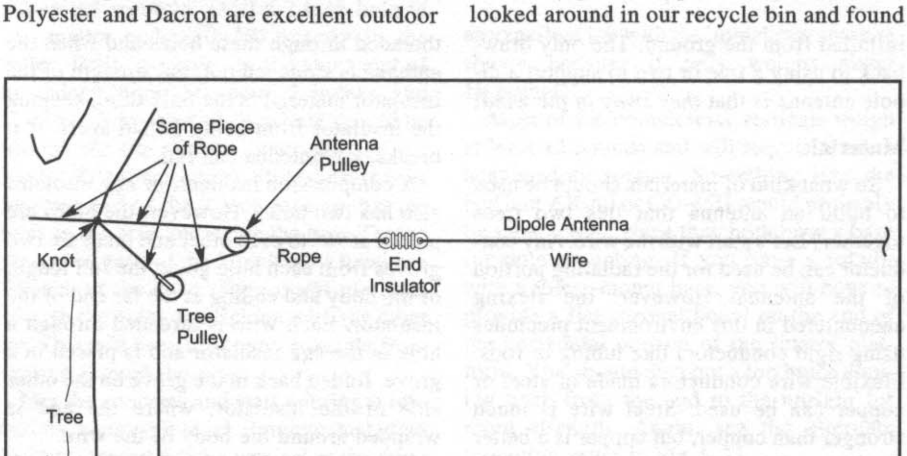

Fig 1—A single piece of rope is tied to the tree. One end is about 2 feet long and attaches to the hub of the tree pulley. The other end is threaded around the antenna pulley, back around the tree pulley and terminates at the plastic jug handle. The antenna pulley is attached to one of the end insulators of the dipole with a suitable length of rope. All ropes are made of polyester.

The pulleys I'm using are plastic, 2½ inches in diameter, advertised for use with clotheslines. I picked this type of pulley because it is inexpensive and I thought wet clothes would surely put more strain on the pulleys than my antenna would. Pulleys made from materials other than plastic can be used for this purpose but are usually more expensive. You should not use pulleys unsuited for outdoor use.

After assembly, the dipole was ready for installation. The two trees I picked support a sloping dipole, running southeast to northwest. This orientation would favor the southwest (for a schedule with central Virginia. Yes, VA is *southwest* from NH.). One end of the antenna is attached to a tree at the southeast side of our property using a length of ¼-inch polyester rope. I installed the rope by first shooting a 2 oz lead weight[4] tied to a piece of 60-pound test fishing line over a limb using a slingshot, standing on the dipole side of the tree.

I removed the weight and tied the fishing line to the end of the rope and pulled the rope into the tree with the fishing line. After removing the rope from the fishing line, I tied the rope to one of the dipole end insulators, and pulled the antenna up until it was approximately centered between the two trees and secured the rope around the trunk of the tree. Another piece of polyester rope attaches the remaining end insulator to a pulley. The length of this rope was selected to keep the pulley from touching the tree when the two trees sway toward each other.

Since this is a sloping dipole, I was able to reach the rope attachment point by propping a ladder against the northwest tree, where I tied another piece of polyester rope, leaving a short end about two feet long to which I tied the second pulley.

Hoisting the remaining end of the dipole was easy. I threaded the long end of the rope tied to the northwest tree through the pulley on the end of the dipole, and then back through the pulley tied to the tree and terminated it at the plastic-jug handle. The jug full of sand is tied on the rope at the midpoint between the pulley and the ground. This point has to be determined during calm weather and with the pulley system in equilibrium. **Fig 2** shows a photograph of the pulley arrangement.

I have 22 pounds of pull on the antenna because of the 2× multiplication factor of the two pulleys. This is more than enough tension to nicely suspend the antenna. This advantage, however, causes the jug to move twice as far as the antenna moves. Since the

Fig 2—Pulley system mounted on the northwest tree.

pulley tied to the tree is about 20 feet off the ground, the trees can sway up to five feet toward or away from each other before the jug contacts either the pulley or the ground. This has worked nicely for me; however, varying the attachment point of the rope on the northwest tree would accommodate other tree swaying distances.

Final Thoughts

After I suspended my dipole between the trees, I brought the feed line into the house to a coaxial switch. I've been using this pulley arrangement for the last 12 years and during that time the dipole ropes failed twice—once from a squirrel's insatiable desire for polyester rope and another time when an over-zealous limb frayed the rope. None of the wires, ropes or insulators have failed for other reasons.

I have a 40-meter dipole and a 160-meter folded monopole that have duplicate pulley assemblies. The only difference is the tension for the twin-lead monopole is supplied by a 20-ounce soft-drink bottle filled with sand. I didn't need the full 22 pounds of pull available from the one-gallon jug.

Notes and References

[1] P. Danzer, N1II, ed., *The ARRL Handbook* (Newington: ARRL, 1998), p 30.30, Table 30.32.

[2] J. Warren, WB4MDC, "Weatherproofing Coaxial Cable," *The ARRL Antenna Compendium Vol 6* (Newington: ARRL, 1999), pp 156-159.

[3] More information about types of rope can be found at: **http://www.pagesz.net/~wa4bpj/Ham_Radio_Tech_Info/Rope/rope.htm**

[4] The shape and size of the weight are important when using a slingshot. I like a 1-inch diameter, ½-inch thick lead donut, shaped by pouring molten lead (wheel weight) into a 1-inch hole in an oak block. The center hole is drilled large enough to pass the fishing line. It "shoots" nicely and resists being caught by notches in tree branches.

A Look Inside the Auroral Zone

By Carl Luetzelschwab, K9LA
1227 Pion Road
Fort Wayne, IN 46845-9510

Ever wonder what's going on in the auroral zone when the magnetic indices are elevated? Is it chock-full of ionization, causing widespread absorption? And is absorption the only impact on RF? Read on and find answers to these questions.

With the explosion of information available on the World Wide Web, it's likely that you've seen the colorful auroral pictures (like the one on the cover of this book) that come out of the Space Environment Center (SEC) in Boulder, CO. SEC, which is a part of NOAA (National Oceanic and Atmospheric Administration), posts these auroral pictures on their web site from current satellite passes. These pictures can be viewed at **www.sec.noaa.gov/pmap**. By the way, "pmap" is short for "power map"—more about the name later.

Let's take a look at the data these pictures give us, with the goal being a physical understanding of the ionization in the auroral zone and how it impacts our RF. I'll restrict the detailed analysis to auroral conditions in the evening hours (local time), but I'll add some comments at the end about auroral conditions around local midnight and in the early morning hours. I'll also discuss photos from another satellite to give an even better understanding of what's going on in the auroral zone.

The auroral zone, also referred to as an auroral oval, is the annular ring (the reddish-orange area in the pmap on the cover) that is centered about the magnetic pole. There is an auroral oval at the north magnetic pole and one at the south magnetic pole. To a first-order approximation, they are in step with each other—if one is quiet, the other one is too. And if one is active, the other one is too. The auroral oval is thickest in the local midnight sector and thinnest in the local noon sector.

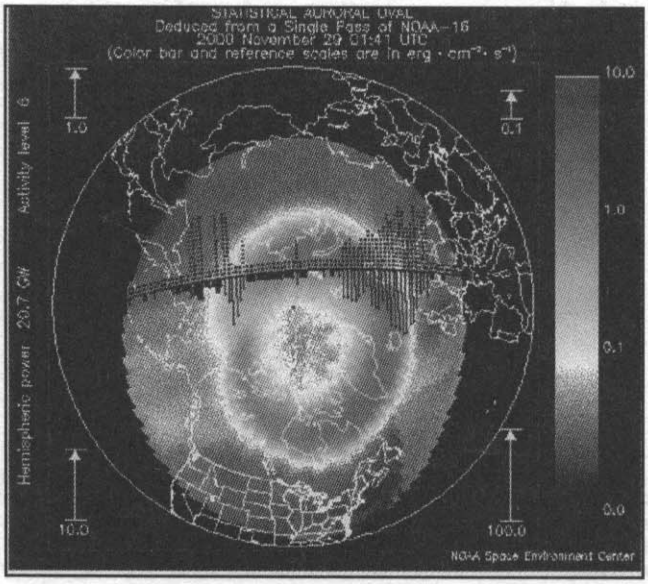

Fig 1—Pmap for Nov 29, 2000, at 0141 UTC.

Fig 1 is a sample pmap for Nov 29, 2000, at 0141 UTC. It is the gray-scale version of the pmap on the cover. The satellite made its pass over the northern polar area at 0141 UTC, which is the time the satellite was halfway through its polar pass. The satellite's track across the northern polar area is the continuous black line running from west to east. The solid black bars perpendicular to the satellite track (the ones extending toward the south) are proportional to the logarithm of the average energy flux observed at that location in erg cm^{-2} sec^{-1}. The scales for these solid black bars are the 0.1, 1.0, 10.0, and 100.0 lines in the four corners of the picture. The length of the solid black bar indicates how much ionization may be present.

From these data, the total power input to the polar region as a result of auroral particles can be estimated. For this specific pass, the power was estimated at 20.7 gigawatts, as noted on the left side of the picture. Using observations from over 300,000 satellite passes, this estimate of power (hence the term "power map," or pmap for short) is put into one of ten categories called an auroral activity level.

The auroral activity level for this pass was 6, which is noted on the map on the left

Table 1
Estimated Power Into Auroral Zone, Related to Auroral Activity and K_p

Power gigawatts	Aurora Activity Level	K_p Level
< 2.5	1	0+
2.5 - 3.9	2	1–
3.9 - 6.2	3	1+
6.2 - 9.8	4	2
9.8 - 15.5	5	2+
15.5 - 24.4	6	3
24.4 - 38.6	7	3+
38.6 - 60.9	8	4
60.9 - 96	9	5–
> 96	10	$\geq$ 5+

side of the picture after the estimated power input. The auroral activity level correlates to the 3-hour planetary magnetic K_p index shown in **Table 1.**

Thus the K_p index at the time of this pass was 3 (unsettled geomagnetic field). Note that the auroral activity level on the pmap is not the same as the K_p index.

Once the auroral activity level is known, one of ten predetermined statistical auroral ovals (one for each of the ten auroral activity levels) is superimposed on the picture. Each predetermined statistical oval was created by averaging NOAA satellite observations from all passes over the auroral regions that had that estimated level of auroral activity. These essentially are the same ovals in Peter Oldfield's *DXAID* propagation and mapping software,[1] and simply indicate where visible aurora is likely to occur. Thus the auroral oval on the pmap is not a real-time picture—it is a canned picture based on the auroral activity level, which comes from the estimate of auroral particle power.

Going off in the opposite direction from the solid black bars are a series of black dots. The number of dots is the average energy of the precipitating electrons involved at that location. The number of dots goes from a minimum of two dots (an energy of 350 electron volts) to a maximum of 22 dots (17,500 eV). This is the range of the detector onboard the satellite.

The number of dots tells us to what depth electrons penetrate into the atmosphere. The higher the energy, the farther down they penetrate. **Fig 2** gives the relationship between the number of dots (electron energy) and altitude.[2]

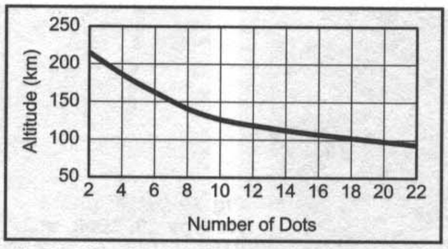

Fig 2—Depth to which electrons penetrate.

From Fig 1, the highest number of dots (about 18) occurred at the equatorward edge (the outer perimeter) of the auroral oval during this pass over the northern polar area. Using Fig 2, we see that these precipitating electrons got down to around the 105-km level—the E region. Inside the auroral oval, the highest number of dots was about eight. Fig 2 indicates these electrons only got down to around the 140-km level—the lower F region.

It is important to realize that the detector onboard the satellite only measures low-energy precipitating electrons that get down to 100 km or so. These are the electrons that can cause visible aurora. The higher-energy electrons that get down to the D region (below 90 km) to cause auroral absorption are *not* measured.

We can now qualitatively summarize the pmap information. We know where visible aurora is likely to occur (anywhere in the annular ring), and we know that the less-energetic electrons precipitate into the auroral oval and that the more-energetic electrons precipitate at the equatorward (and poleward) edge of the auroral oval. And to reiterate, the oval on the pmap tells us nothing about absorption.

This is good information, but unfortunately it really doesn't tell us much about the potential impact to an RF signal that is following a specific path through the auroral zone. Just because there is ionization doesn't necessarily mean it will have an effect on RF. Somehow we need to determine where both auroral absorption and significant E-region ionization is occurring—the two items that can affect our RF.

To answer the "auroral absorption" question, it is known that auroral absorption in the evening hours generally occurs equatorward of visible aurora. The brighter the visible aurora, the more likelihood there is that absorption is also occurring.

To answer the "significant E-region ionization" question, we can use a technical paper by Bob Hunsucker, AB7VP, et al.[3] Bob and his colleagues monitored the auroral event of Mar 16, 1972, with an all-sky camera, a scanning photometer, an incoherent scatter radar, a three-component magnetometer, a 30-MHz riometer and two VHF/UHF auroral radars. See the sidebar for brief descriptions of these measurement techniques.

The comparison of all their data showed that intense discrete auroral forms could be associated with enhanced E-region electron densities of up to 1×10^6 electrons per cubic centimeter. That works out to a critical frequency of about 9.0 MHz. This increased

K_p Index

Usually the K_p index is reported from 0 to 9 in steps of 1. For better resolution, the K_p index is often broken down in steps of one third: 0, 1/3, 2/3, 1, 1-1/3, 1-2/3, 2, 2-1/3, and so forth. The K_p index is then designated as a whole number, or as a whole number with a + or – sign following it to indicate if it's one third more or one third less, respectively. For example, 1+ means one third more than 1, which is 1-1/3. Likewise, 2– would be one third less than 2, which is 1-2/3.

Measurement Techniques

All-Sky Camera—A downward-looking camera mounted above a convex mirror to enable it to take a picture of the sky from overhead to the horizon at all azimuth angles around the compass.

Scanning Photometer—An instrument that measures the intensity (in Rayleighs) of visible light, specifically at wavelengths of auroral emissions.

Incoherent Scatter Radar—Operating at 1290 MHz in conjunction with a 27-meter dish, it was used to measure electron density down to 70 km. When this investigation was undertaken, the radar was located at Chatanika (Alaska). It has since been moved to Sondre Stromfjord in Greenland.

Three-Component Magnetometer—Used to measure variations in the H, D, and Z components of the Earth's magnetic field. This data is also used to determine the local k index.

30-MHz Riometer—An acronym for **R**elative **I**onospheric **O**pacity **Meter**. It measures incoming cosmic noise at 30 MHz. If the level of cosmic noise decreases from the quiet baseline, that indicates additional absorption.

Two VHF/UHF Auroral Radars—One was a NOAA radar at 50 MHz at Anchorage, and the other was a similar radar operating at either 139 MHz, 398 MHz or 1210 MHz at Homer (near Anchorage).

Fig 3—DMSP photo for Nov 29, 2000, at 0153 UTC.

ionization can affect our RF with respect to refraction or reflection.

The possibility of RF being refracted or reflected increases with the increased ionization. Depending on how the RF encounters the increased ionization, this can give us a normal hop when the MUF gets high enough for the frequency of interest, or it can give us a non-great-circle path. The latter is what I believe happened on a 160-meter QSO on the night of Mar 10, 1999, as explained in my *CQ* article.[4]

Now we know what to look for—intense discrete auroral forms. But where do intense discrete auroral forms occur? The dots on the pmap, indicating electron energy, give us a clue—generally at the equatorward and poleward edges of the auroral oval, where the number of dots is highest and the bars are long.

Let's take a look at a Defense Meteorological Satellite Program (DMSP) photo, **Fig 3**, on the same night as the pmap of Fig 1. The time of this photo is 0153 UTC. That's 12 minutes after the time of the pmap picture.

Before discussing the visible auroral forms, let's get oriented with Fig 3. Right in the middle of the photo is Hudson Bay in Canada. The two lakes running north-south at the left center of the photo are Lake Winnipegosis and Lake Winnipeg in Manitoba. The Great Lakes are toward the lower left. The big bright light just southwest of Lake Superior is Minneapolis, MN. The big bright light on the West side of Lake Michigan right at the bottom of the photo is Milwaukee, WI.

With respect to auroral forms, there's a lot going on in this photo. In addition to intense (bright) discrete auroral forms, there is quite a bit of diffuse aurora (the lighter shade of white) in the oval. Note that the equatorward boundary of the auroral forms is just north of the northern extremities of the Great Lakes, and compares favorably with Fig 1. The poleward boundary of the auroral forms appears to be just north of Hudson Bay, and this also compares favorably with Fig 1.

Applying the aforementioned conclusions says that those intense discrete auroral forms would be the most likely areas to impact our RF, both with respect to absorption and refraction/reflection. Since those areas are so widespread, it is obvious that our RF might have a bit of a problem getting through the auroral zone on this night at the time indicated. So can we say that an elevated K_P index will *always* create havoc with our RF? No, we can't, for two reasons. First, our RF could sneak under those intense discrete auroral forms as suggested by Cary Oler and Ted Cohen N4XX,[5] or it could even sneak through the gaps between those intense discrete auroral forms. Second, auroral events are dynamic in nature—in other words, wait a bit and things will change (hopefully for the better!).

To show how variable auroral events can be, **Figs 4A** and 4B show a pmap and the DMSP photo in the same geographical area as Fig 3, but for another night. The time for the pmap in Fig 4A is 0200 UTC and the time for the DMSP photo in Fig 4B is 0204

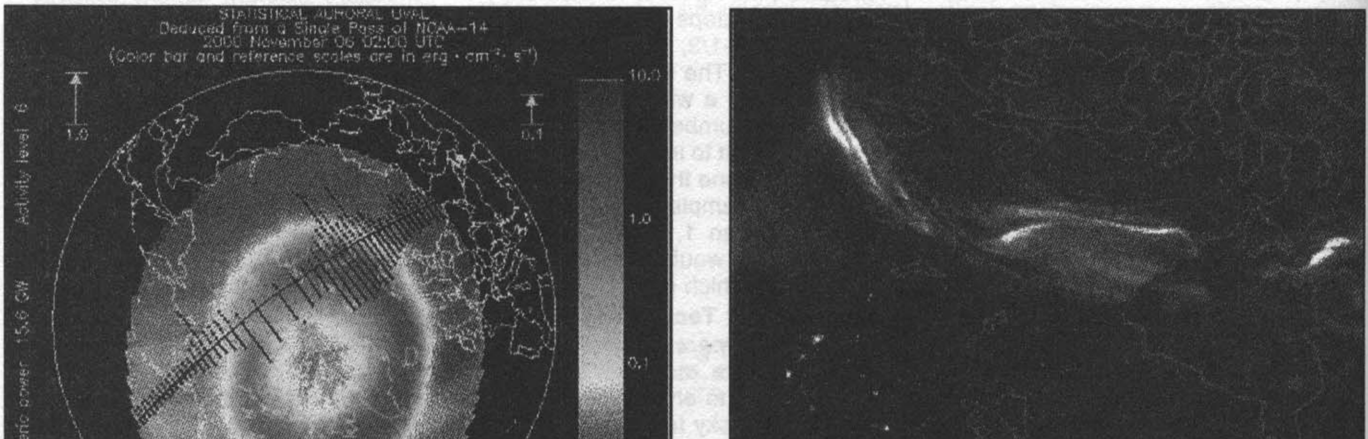

(A)

(B)

Fig 4—At A, pmap and at B, DMSP photo for Nov 6, 2000, around 0200 UTC.

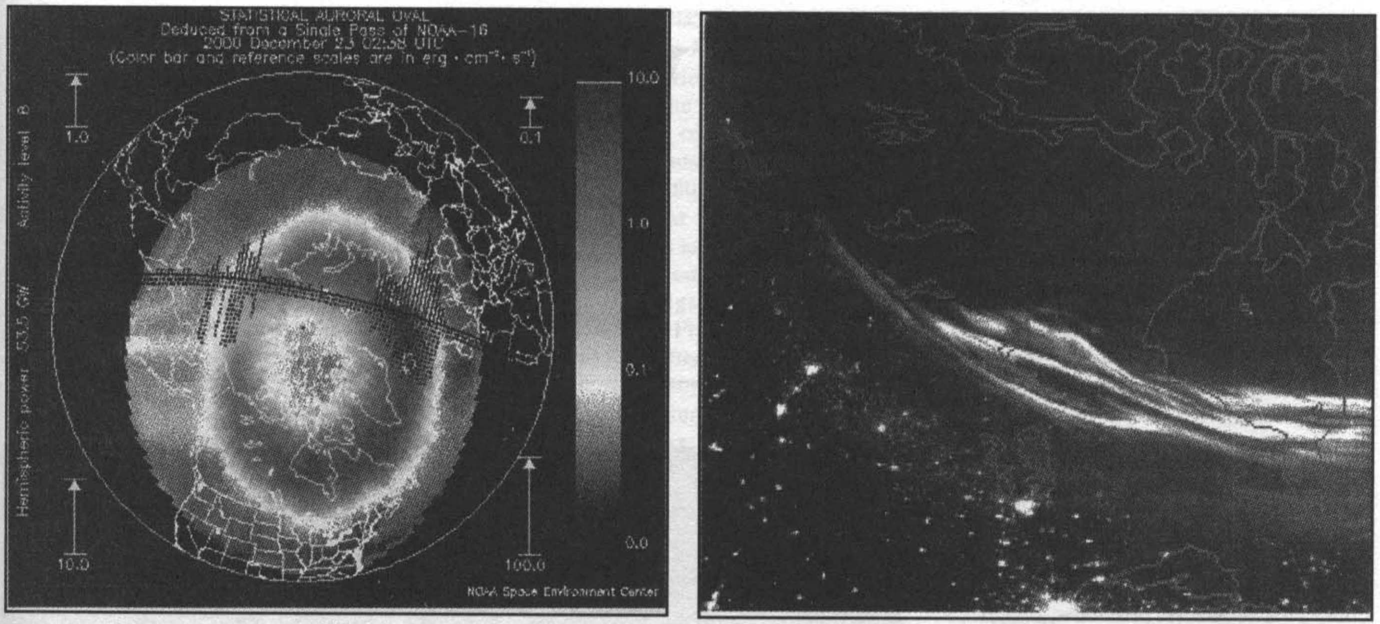

(A)

(B)

Fig 5—At A, pmap and at B, DMSP photo for Dec 23, 2000, around 0245 UTC.

UTC. The auroral activity level is 6, which is the same as in Fig 1. So you might expect roughly the same amount of auroral activity as seen in Fig 3. But here the auroral activity is limited to several intense but very thin arcs. There doesn't appear to be as much diffuse aurora either. If you look very closely, you'll also see thin cloud layers obscuring all but the really bright city lights. And the earlier comment about our RF sneaking under or through gaps might have been applicable for this night.

Fig 5A and 5B show another pmap and the corresponding DMSP photo for Dec 23, 2000. The time for the pmap in Fig 5A is 0238 UTC. The time for the DMSP photo in Fig 5B is 0256 UTC. The auroral activity level is 8, which is two levels *higher* than in Fig 1 and Fig 4A. (K_p = 4, indicating an active geomagnetic field.) So you might expect even more activity than in Fig 3 and certainly more than in Fig 4B. But the auroral activity is limited to many intense but long thin arcs. There is some diffuse aurora equatorward of the intense arcs. Dec 23 was a nice cloudless night, as evidenced by the numerous city lights showing up. As for RF sneaking under or through gaps, it's quite obvious that the best possibility in this area on this night might have been some sneaking under due to the longitudinal extent of the arcs.

Summary

Summarizing this investigation for auroral activity in the evening hours, we can say that the auroral oval in the pmap or in *DXAID* only tells us where *visible aurora* is likely to occur. The auroral activity that may have an impact on our RF by means of absorption or refraction/reflection is generally at the equatorward and poleward edges of the auroral oval. But it's possible that our RF could sneak under or through gaps in these intense auroral forms. As the K_p index becomes ever higher, however, there is less likelihood for our RF to sneak under or through.

Around local midnight things are more active. There is very intense auroral activity, including bright active regions coming down field lines, strong negative excursions on magnetometer records, and rapid and strong increases in auroral absorption on riometers. This also makes it less likely for our RF to sneak unimpeded under or through gaps.

In the early morning hours, auroral activity is pretty structureless and is tough to see. But the amount of particle energy deposited into the auroral zone is generally more than in the evening hours. Moreover, the number of precipitating electrons with energy greater than 30 keV can be pretty significant, giving rise to more absorption. Thus we may not see much looking up at the sky, but nonetheless our RF may have a problem getting through the auroral zone unimpeded.

In closing, auroral events can disrupt direct path propagation by means of absorption and/or refraction/reflection, or your RF may manage to sneak through unimpeded. If the direct path is disrupted, the auroral activity may also provide an alternate path—a non-great-circle path. So hang in there—you may be pleasantly surprised with a lowband opening that others might miss.

I'd like to thank Dave Evans and Sue Greer of SEC for their help in acquiring the pmap and DMSP data. And thanks to Dave and Sue and Bob Brown, NM7M, for their review of this article.

REFERENCES

[1] *DXAID* software program, Peter Oldfield, mailto:poldfield@proxymedia.net.

[2] Brekke, A., *Physics of the Upper Polar Atmosphere*, (New York: John Wiley and Sons Ltd, 1997)

[3] Hunsucker, R.D., Romick, G.J., Ecklund, W.L., Greenwald, R.A., Balsley, B.B., and Tsunoda, R.T. (1975), "Structure and dynamics of ionization and auroral luminosity during the auroral events of March 16, 1972 near Chatanika, Alaska," *Radio Science*, Volume 10, Numbers 8 and 9, Aug-Sep 1975, pp 813-821.

[4] Luetzelschwab, R.C. (1999), "Skewed Paths to Europe on the Low Bands," *CQ*, Volume 55, Number 8, Aug 1999, pp 11-18.

[5] Oler, R.C., and Cohen, T.J. (1998), "The 160 meter Band—An Enigma Shrouded in a Mystery, Parts I and II," *CQ*, Volume 54, Numbers 3 and 4, Mar 1998 and Apr 1998, pp 9-14 and pp 11-16.

Understanding WWV Spots

By Pietro Marino, IT9ZGY
Viale Principe Umberto 10
I-90149 Palermo, Sicily Island, Italy

IT9ZGY discusses HF propagation, as related to WWV broadcasts.

Introduction

WWV broadcasts an hourly propagation bulletin from the National Institute of Standards and Technology in Fort Collins, Colorado, at 18 minutes and 45 seconds past the hour. This broadcast provides:

- A brief summary of the observations of the previous day
- *Forecasts* for the following 24 hours
- The values of the *Solar Flux*
- The *A-index* of geomagnetic activity
- The *K-index*.

The K-index is updated every three hours. It is the average of measurements taken at different places on the earth. WWV does not broadcast *sunspots*, the number of sunspots, which is provided by other scientific centers. The WWV data, which is essential for predicting the possibility of radio communications at different frequencies and different times, can also be received from the various Packet Clusters, but with specific symbols and format that are difficult to find in publications on radio propagation. A description of these phenomena and the meaning of the relevant abbreviations were described by Rus Healy, NJ2L (now K2UA) in Nov 1991 *QST* and by myself in Jun 2001 *Radio Rivista*.

Solar and Geomagnetic Indices

The Packet Cluster, normally used by serious Dxers to gather real-time information on current DX activity on the bands, provides at times a string such as this for Boulder:

SFI=193 A=24 K=2 R=164 SA:mo→lo-mo GF:un-mi/s Forecast: un→qu

Let me try to explain the meaning for these cryptic symbols.

SFI: the *Solar Flux Index*, measures (in units of 10^{22} J/m^2 sHz) the solar emission at 2800 MHz (10.7 cm) through the energy received per unit time, area and frequency interval. The SFI values are compiled daily by the Radio Observatory at Penticton, British Columbia (before June, 1991, this was done at Algonquin, near Ottawa). The solar flux is strongly correlated to the ionization level of the ionosphere and, besides sunspots, is another excellent indicator of HF propagation conditions. The exact relationship between solar flux and sunspots is, however, difficult to quantify with precision.

SA: the *solar activity* is correlated to the presence of sunspots, which are local concentrations of electromagnetic flux on the sun, clustered in groups and darker (ie, cooler) than the surrounding chromosphere. The solar flux produced by the solar activity originates from the upper layers of the sun's chromosphere and from the solar corona.

Sunspots (the "R" number above, such as "R=164") are the number of spots visible on the surface of the sun. In general, a large number yields better propagation conditions on HF and 50 MHz. The raw number of sunspots varies greatly during a month, so they are smoothed or averaged over a 12-month period to create the monthly "Smoothed Sunspot Number" (SSN).

Solar activity is classified in the WWV broadcasts according to the following five definitions: **very low - low - moderate - high - very high**. We shall deal later with the Earth's geomagnetic field activity (GF), which is classified in turn using the following terminology: **quiet - unsettled - active - minor storm - major storm - severe storm**. **Table 1**, from the diagram in *The ARRL Antenna Book* (18th edition, p 23-15) allows us to derive an approximate smoothed sunspot number from the solar flux.

Table 1

SFI	Smoothed Sunspots
68	0
77	10
83	20
90	30
104	50
135	100
158	130
180	160

Here's a complete clip from a WWV report from their Internet site:

```
:Product:    Geophysical    Alert
 Message wwv.txt
:Issued: 2002 May 21 1502 UTC
# Prepared by the US Dept. of
 Commerce, NOAA, Space Environment
 Center
#
# Geophysical Alert Message
#
Solar-terrestrial indices for 20
 May follow.
Solar flux 171 and mid-latitude A-
 index 12.
The mid-latitude K-index at 1500
 UTC on 21 May was 2 (12 nT).
Space weather for the past 24 hours
 has been strong.
Radio blackouts reaching the R3
 level occurred.
Space weather for the next 24 hours
 is expected to be minor.
Radio blackouts reaching the R1
 level are expected.
```

Table 2 gives the values of solar flux, sunspot number, A and K indices, number of Flares, daily R (raw sunspot) number and Forecast measured during the period from 26 March to 24 April of 2002. It shows that the direct correspondence between solar flux and sunspots fails at times.

Fig 1 is a plot of the data of Table 2. In general, the higher the solar flux, the better the propagation at higher frequencies, since an increased number of sunspots yields a higher ionization of the ionospheric layers. This, however, holds only if the values of the A and K indices are not too large. In fact, too-high values of the solar flux can lead to both increased values of the A and K indices and to increased absorption in the D layer for lower and medium frequencies.

A high solar flux, combined with low values of A and K, provides the best propagation conditions, in particular in the range of wavelengths between 10 and 20 meters. A low value of the solar flux, even with very low values of A and K, gives rise to poor propagation, with brief openings on paths at high latitudes. The bands that are most affected by these conditions are those between 10 and 17 meters.

The 40-meter and 80-meter bands are less affected by the solar flux, but do require minimal values of A and K for good propagation. Under these conditions, polar paths and twilight openings can lead to exceptional DX contacts. Finally, with high values of A and K or after a sudden change in their values, the absorption of the E layer increases, deteriorating long-distance propagation. In particular, the 160-meter band (Topband) is the most sensitive to a deterioration of propagation conditions following a sudden change of all indices.

A—The A index measures, on a scale from 0 to 400, the averaged daily value of the terrestrial geomagnetic field activity (GF, Geomagnetic Field), derived from the K index. Scientific centers (for example, Boulder, Colorado, and Kiel, Germany) evaluate the A and K values.

K—The K index reflects the geomagnetic activity at the place where measurements are made. It measures the deviation of the horizontal component of the terrestrial magnetic field and reflects the radio absorption by the lower ionospheric layers at frequencies below 5 MHz. It is measured on a scale from 0 to 9 and is updated every three hours.

Table 2

Date	*Solar Flux SFI*	*SSN*	*A-Index*	*K-Index Boulder (3-hour intervals)*	*Flares*	*R*	*Forecast*	
							SA	*GF*
26/03/01	263.7	339	6	1 1 1 1 3 3 3 1	5	276	mo→mo-hi	qu-un→qu-un
27/03/01	273.4	291	18	4 2 2 3 2 3 4 5	9	339	mo→mo-hi	qu-ac→un-mi/s
28/03/01	273.5	352	31	2 2 5 5 5 4 2 3	6	291	ac→ac	ac-→mi/s-un-mi/s
29/03/01	274	315	25	5 4 4 3 3 4 3 2	6	352	hi→hi	qu-mi/s→un-mi/s
30/03/01	256.8	349	15	2 2 2 3 4 3 2 3	4	315	mo→hi	qu-ac→un/ma/s
31/03/01	245.6	326	192	6 7 9 6 6 6 7 5	7	319	mo→hi	qu-se/s→ac-se/s
01/04/01	257.5	320	30	5 5 5 2 2 2 4 4	2	326	hi→hi	qu-mi/s→un-ac
02/04/01	228	223	20	4 4 4 3 2 3 3 4	2	320	hi→hi	qu-ac→un-ac
03/04/01	223.1	228	5	2 1 1 0 3 3 2 2	3	223	hi→hi	qu-ac→un-mi/s
04/04/01	204.8	217	15	2 2 1 1 4 5 5 2	5	228	mo→mo-hi	qu-un→un-mi/s
05/04/01	207.5	214	19	1 2 4 4 2 4 4 3	1	217	hi→mo-hi	qu-mi/s→qu-ac
06/04/01	191.7	136	12	2 1 3 2 3 3 3 3	3	214	hi→mo-hi	qu-ac→qu-un
07/04/01	179.5	153	16	4 4 3 2 3 4 5 3	1	136	hi→mo-hi	qu-mi/s→un-mi/s
08/04/01	169.2	188	41	3 2 4 5 5 4 5 5	—	153	l o→mo-hi	qu-mi/s→un-mi/s
09/04/01	164.8	185	19	2 4 4 3 3 4 3 2	5	188	lo→mo-hi	qu-mi/s→un-ma/s
10/04/01	169.7	170	9	3 0 2 2 3 4 2 2	4	185	hi→mo-hi	qu-ac→qu-ma/s
11/04/01	159.6	178	60	3 3 3 2 3 8 5 6	8	170	mo→mo-hi	qu-ac→qu-ma/s
12/04/01	149	159	38	7 5 5 3 3 3 2 1	—	178	mo→mo-hi	qu-se/s→ac-ma/s
13/04/01	137	138	36	1 1 3 6 5 4 4 3	—	159	lo→mo-o	qu-ma/s→qu-ma/s
14/04/01	138.7	149	27	3 4 4 3 3 3 3 2	5	138	lo→lo-mo	un-ma/s→un-ma/s
15/04/01	134.2	139	17	3 4 3 2 3 3 2 2	7	149	mo→lo-mo	qu-ac→qu-ac
16/04/01	123.4	107	7	2 2 1 1 2 3 1 3	4	100	hi→lo-mo	qu-un→qu-ac
17/04/01	126.1	89	7	2 3 1 2 2 3 1 2	6	107	lo→lo	qu-un→qu-ac
18/04/01	131.8	63	50	5 5 5 3 3 3 3 2	3	89	ac→ac	ac-mi/s→un-ma/s
19/04/01	144.5	85	7	3 2 2 2 3 3 2 1	2	63	mo→lo-mo	qu-un→qu-un
20/04/01	167.8	103	8	3 3 1 2 2 3 3 2	8	85	mo→mo	qu-un→qu-un
21/04/01	191.1	156	7	2 2 0 2 2 4 2 4	6	85	mo→mo	qu-un→qu-un
22/04/01	192.5	164	28	4 3 4 4 5 4 2 3	13	103	lo→qu-mi/s	mo→ac-mi/st
23/04/01	196.4	140	21	4 4 5 4 3 3 3 2	6	150	mo→lo-mo	un-ma/s→qu-un
24/04/01	193.5	175	8	1 2 3 2 2 3 2 2	5	164	mo→mo-hi	qu-un→qu-un

This table and the plot of Fig 1 display very high values for solar flux and smoothed sunspots, with very high A and K indices, which occurred this year between the end of March and the beginning of April, 2001. In this period, many flares occurred too, among the largest in the last 10 years. R is the daily index of sunspots. The most common abbreviations are:

ac	active	mi/s	minor storm
erupt	eruptive	ma/s	major storm
forec	forecast	MUF	maximum usable frequency
GF-gf	geomagnetic	qu	quiet
hi	high	SA-sa	solar activity
lo	low	se/s	severe storm
LUF	lowest usable frequency	SFI-sfi	solar flux index
magfield	magnetic field	un	unsettled
mo	moderate	→	tendency to

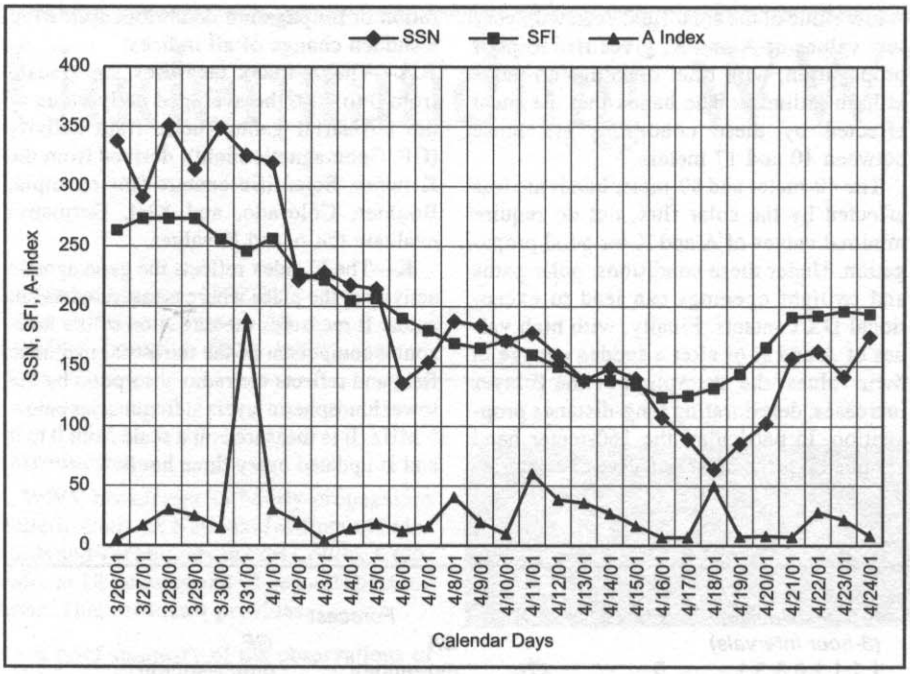

Fig 1—Plot of the data in Table 2, showing daily values for the relative sunspot numbers, solar flux (SFI) and the A index over a period of about a month from March 26 to April 24, 2001. Note that the SSN and the SFI indices don't always track each other smoothly.

Table 3
Relationship Between A and K-Indices

Definition	*Abbrev.*	*A-Index*	*K-Index*	*Comments*
Quiet	qu	0-7	1-2	Quiet geomagnetic field. Excellent possibilities via Polar paths
Unsettled	un	8-15	3	Unsettled geomagnetic field. Good but unstable propagation conditions, possible deterioration.
Active	ac	16-27	4	Active geomagnetic field. Small magnetic storm possible (MINOR STORM). Poor propagation on Polar paths.
Minor Storm	mi/s	28-48	4-5	Minor to medium magnetic storm. Polar paths closed. Very bad propagation conditions.
Major Storm	ma/s	49-140	6-7	Major storm. Polar paths closed, transequatorial and continental propagation almost inexistent.
Severe Storm	se/s	141-400	> 7	Exceptional magnetic storm. Almost total blackout of radio communication. Bands are dead and transceivers seem dead.

You may also encounter something called the K_P index, the "planetary K" index, which is an average of the K indices for the various observatories around the world. **Table 3** shows the relation between A and K and explains their meaning.

R—This is the daily relative number of observed sunspots. Since counting sunspots is somewhat subjective and depends on the observer himself, it is defined as follows:

$$R = K\ 10\ g\ s$$

where s is the number of sunspots, g the number of sunspot groups, and K the index defined above for the particular observation site.

Forecast—This is the forecast for the following 24 hours. It refers to SA and GF.

Summary, WWV Numbers

SFI relates to the MUF (Maximum Usable Frequency). The higher the SFI, the better will be propagation on the higher amateur HF bands.

The **A** index is an averaged number, reflecting essentially what happened with the K indices yesterday. The A index relates most strongly to possible HF propagation along paths in the Polar Regions. The lower the A, the better such paths will be.

The **K** index relates to the real-time geomagnetic field at a particular observatory. The lower the values of this index, the better the conditions, in particular on the 40- and 80-meter bands. A very high value of the K index, together with aurora indicates a worsening of HF propagation, giving rise to serious difficulties, in particular for polar paths.

Aurora—We know from experience that there is a strict correlation between polar aurora phenomena and occasional solar flares, with aurora appearing with very large flares. A rather high value of the geomagnetic indices with a high number of sunspots, together with solar flares, is a warning sign for radio amateurs. Aurora, in fact, develops typically 14 to 36 hours after the appearance of large flares. This auroral phenomenon, causing serious difficulties to HF radio communication, is a blessing for VHF operators.

Flare—A flare is a catastrophic sudden eruption of particles and radiation emitted by the surface of the sun on a scale of immense dimensions. Its duration varies between a few minutes and hours. This exceptional activity of the sun causes fading of radio signals and, on some frequencies, even a temporary blackout of communications during exceptionally intense flares.

Gray Line—This is the "twilight zone," a belt circling the earth between the lighted and dark hemispheres, in which light is diffused by particles in the high atmospheric layers. The gray line is quite broad, since the atmosphere has a tendency to expand between sunrise and sunset. Its alignment is exactly in the North-South direction at the equinoxes, and varies between ±23° during the year. The propagation through this twilight zone is very efficient, in particular for antipodal propagation (to the opposite side of the globe). The useful time window along a path begins slightly before sunrise at one point and slightly after sunset at the other, for about twenty minutes. See **Fig 2**.

Propagation on 160 Meters

Some hams believe that the 80-meter and 160-meter bands share similar features since they are relatively close in frequency. This is wrong. They are separate worlds and

Topband fans can appreciate its unpredictability. The 160-meter band is close to the so-called electron *gyro frequency*, which is related in a complicated fashion to how electrons spiral down the Earth's magnetic field lines. Most software packages for HF propagation prediction do not reach below the 80-meter band because they don't explicitly take into account the gyro frequency.

The properties of propagation on 160 meters have attracted for years the attention of both Radio Amateurs and professional scientists involved in radio communications. In my pursuit of correlation between solar flux, sunspots and the A and K indices of geomagnetic activity, I could not improve on the results of others. K1ZM, Jeff Briggs, states in his book *The Thrill of 160 Meters* (a very interesting book that reads well) to be ready to bet up to his last dollar against the possibility of propagation predictions for the Low Band. John Devoldere, ON4UN, writes in his book *ON4UN's Low-Band DXing*, "The more I have been active on 160 meters, the more I am convinced of how little we really know about propagation on that band."

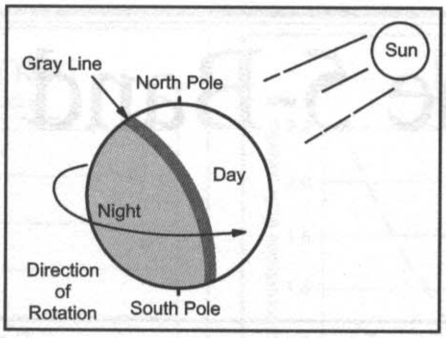

Fig 2—The gray line or terminator is a transition region between daylight and darkness. One side of the Earth is coming into sunrise and the other is just past sunset. [Courtesy, *The ARRL Antenna Book*, 19th Edition.]

Conclusions

We must accept that the solar flux has little relevance on the propagation forecasts for the 160-meter band and that the A and K indices do not allow forecasts for this band either. If you are really interested in knowing more about the propagation on Top Band, I can refer you to the article by Bob Brown, NM7M, published in *QEX* (Nov/Dec 2000) entitled: "On the SSW path and 160-Meter Propagation." I also recommend that you read the article by Cary Oler and Ted Cohen, N4XX, "An Enigma Shrouded in Mystery" in *CQ Magazine*, Mar/Apr 1998. These articles will probably not help you to win the bet against K1ZM, but it will at least help you to make the best of this interesting band.

Author's Note: I wish to thank those who helped me with advice, particularly Giorgio Goggi, I2KMG for his essential and relevant support.

NOTES AND REFERENCES

The ARRL Antenna Book, 18th Edition (Newington: ARRL, 1997), Chap 23, Propagation.

R. Healy, NJ2L, "Propagation Broadcast and Forecast Demystified," *QST*, Nov 1991.

J. Briggs, K1ZM, *DXing on the Edge, The Thrill of 160 Meters* (Newington: ARRL, 1998).

C. Older, T. Cohen, N4XX, "An Enigma Shrouded in Mystery," *CQ Magazine*, Mar/Apr 1998

P. Marino, IT9ZGY, *Radio Rivista*, Jun 2001.

Feeding the 5-Band Quad

By L.B. Cebik, W4RNL
1434 High Mesa Drive
Knoxville, TN 37938-4443
e-mail: **cebik@utk.edu**

W4RNL does his usual incredibly thorough analysis of the pitfalls to avoid when feeding a multiband quad antenna.

Short of politics, nothing stirs up controversy like the quad beam. The quad is an enticing antenna, since one can—with some ingenuity—place five bands in a single reasonably lightweight assembly. Commercial versions are available, some using a common feed, others feeding each band separately. Some quad-builders prefer the square arrangement, while others opt for the ice-shedding abilities of the diamond configuration. Quad users tend to swear by the antenna, claiming that it opens and closes bands compared to a Yagi with a similar number of elements—or even more.

Despite two fine texts on the quad—the Orr-Cowan classic and Haviland's more recent study—some questions remain about multiband quads. Is there any definitive reason to prefer separate feeds for each band to a single feed? Is the presumption that each of the antennas in the quad multiband cluster is independent a justified one? Is a five-band quad as good as a three-band quad on the three bands they have in common?

Until recently, answers to such questions as these relied on the testimony of committed users. Antenna modeling suggested further answers, but *MININEC* was too limited to handle truly complex multiband quads. *NEC-2* overcomes many of *MININEC*'s difficulties in handling quads. Tapered element wire segments are unnecessary, and *NEC-2* generally has no wire or segment limits that quad investigations are likely to approach. Carefully constructed models can offer, if not absolutely definitive, at least more conclusive answers to some of the multiband quad questions. If nothing else, the problems of modeling complex quad arrays may interest those new to *NEC-2* or other antenna modeling programs.

MODELING THE QUAD WITH SEPARATE FEEDS

Since quads come in many flavors, we must begin with both a reasonable selection of antennas to model and some modeling parameters. The logical place to start is with the monoband quad shown if **Fig 1**. We can build a successful two-element quad using spacing that ranges from about 0.1 λ to about 0.25 λ. As we move through this range, gain drops from well about 7 dBi in free space to almost a full dB less. Maximum front-to-back ratios are more easily obtained as the spacing increases.

Figs 2 and **3** compare the front-to-back ratio and SWR bandwidth of a 20-meter monoband quad model in free space for element spacings of 0.125 λ and 0.16 λ. The graphs sample 10 points along the band. The wider spacing preserves much of the gain (within 0.2 to 0.3 dB) across the band of the close-spaced version, while increasing the peak front-to-back ratio and broadening the SWR curve. For these reasons, most of this modeling exercise has focused on models with 0.16 λ midrange element spacing.

It is certainly possible to build a successful multiband quad using a fixed boom length and flat-faced spider assemblies for the support arms, as KC6T demonstrated in his 1992 *QST* article. However, modeling such an assembly introduces additional variables into the investigation. Element spacing on each band varies in fractions of a wavelength, and thus each element pair presents a different set of expectations for gain, front-to-back ratio and SWR bandwidth. Therefore, the constant spacing

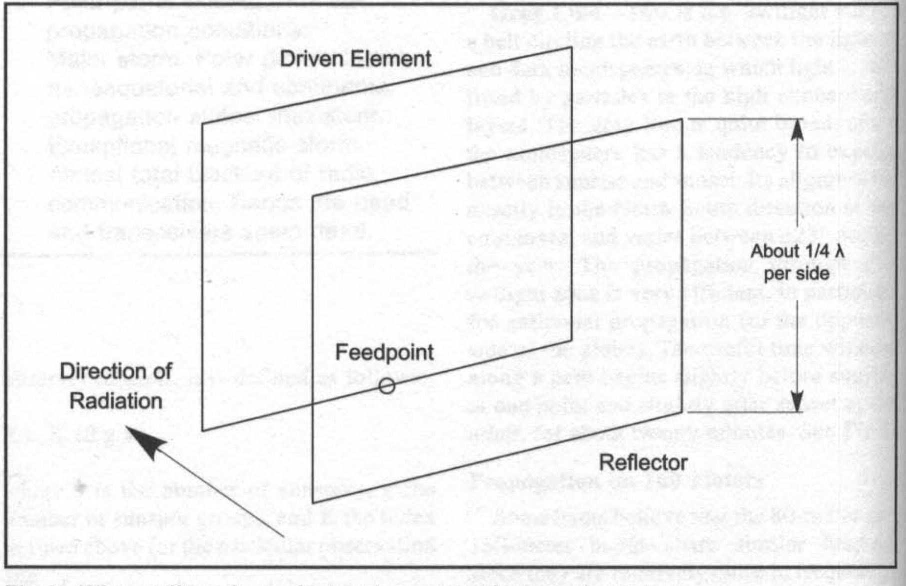

Fig 1—Wire outline of a typical 2-element cubical quad antenna.

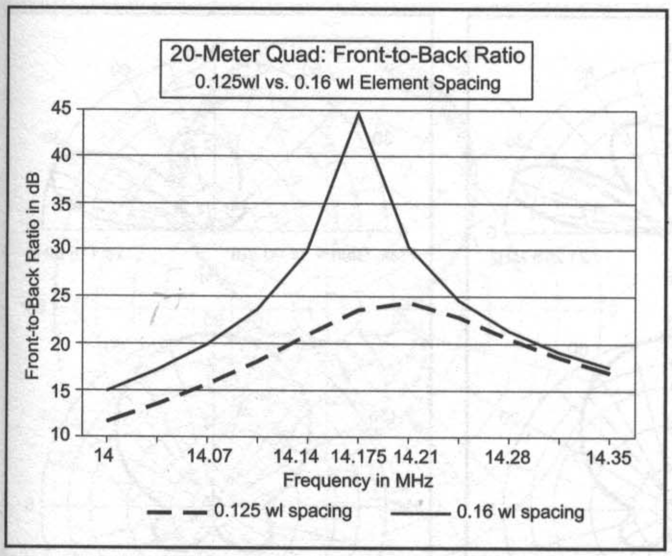

Fig 2—Front-to-back ratios of two 20-meter quads with elements space 0.125 λ and 0.16 λ apart.

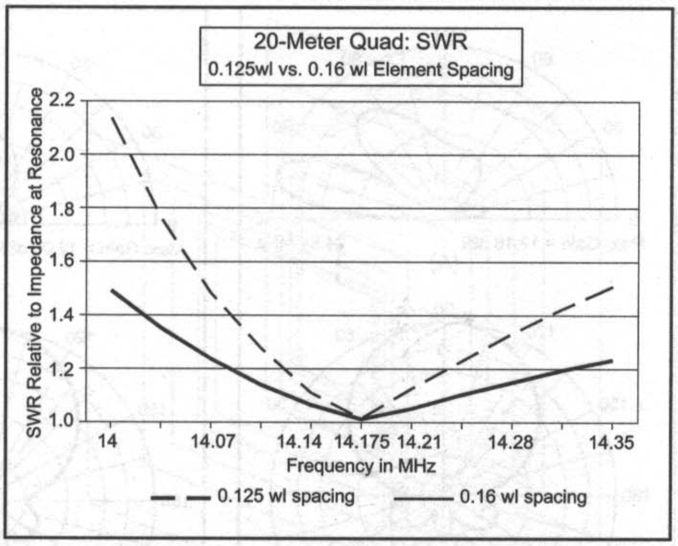

Fig 3—SWR bandwidths of two 20-meter quads with elements space 0.125 λ and 0.16 λ apart.

Table 1
Basic properties of two-element quad beams for 20 through 10 meters.

Band	*Dr. El. Ft/side*	*Refl. Ft/side*	*Spacing Feet*	*Free-Space Gain (dBi)*	*Front/Back (dB)*	*Feed Z R ± j X*	*35' Gain (dBi)*	*F/B (dB)*	*Front/Back Angle*	*Radiation Feed Z R ± j X*
10	8.73	9.23	5.50	7.07	44.6	135 + *j* 1	12.3	31.9	13°	140 + *j* 1
12	9.98	10.54	6.31	7.04	44.6	137 + *j* 2	12.2	39.2	15°	136 + *j* 7
15	11.72	12.38	7.416	7.00	44.2	138 – *j* 1	12.0	26.2	18°	131 – *j* 1
17	13.71	14.464	8.684	7.02	42.1	136 – *j* 3	11.9	23.2	20°	135 – *j* 11
20	17.54	18.46	11.10	7.00	42.6	137 – *j* 0	11.3	23.1	25°	148 – *j* 0

spider-and-hub concept was adopted for basic modeling. Where appropriate, alternative spacing for elements has been modeled to ensure the validity of the results.

Table 1 lists the dimensions and free-space gain of basic quad models for 20 through 10 meters. It also shows the gain, angle of maximum radiation, and front-to-back ratio of each antenna at 35 feet, a typical modest ham installation. Table 1, along with **Figs 4-8** (which show elevation and azimuth patterns of each antenna at 35 feet) has a more general significance. Each antenna on its own band represents approximately a $^1/_8$ wavelength increase in height as one moves from 20 to 10 meters. The patterns may be transferred to similar quad designs by translating the antenna height into a fraction of a wavelength at the design frequency.

I present the numbers in Table 1 only for modeling reference, not as building guides. Although a builder would not have much difficulty using the dimensions as a starting point for a quad made from #14 copper wire, additional adjustments for the realities of construction are quite likely needed. In addition, the models were generated to produce a sharp front-to-back null at the design frequency on each band. This null is a quite narrowband phenomenon and decreases rapidly away from the design frequency. On the limited ham allocations at 12 and 17 meters, the front-to-back ratio does not change significantly, but 20, 15 and 10 meters are different. **Fig 9** overlays free-space azimuth patterns for the 10-meter beam from 28 to 29.5 MHz in 0.5-MHz increments.

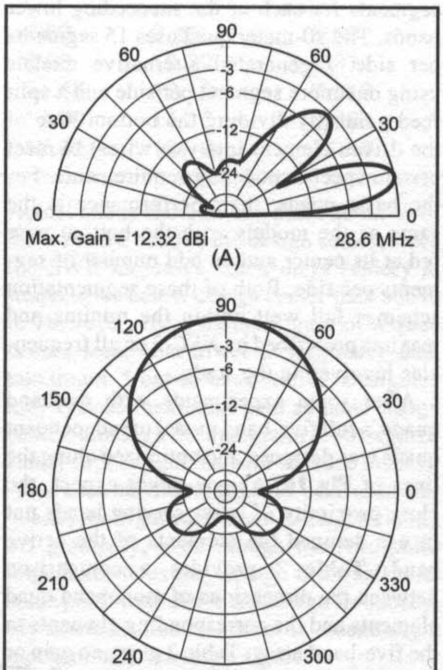

Fig 4—Elevation and azimuth patterns of a 10-meter quad at 35 feet (1 λ). Azimuth angle = 13°.

Commercial designs would very likely strive for a more modest peak front-to-back null, accompanied by a much more gradual decrease in the front-to-back ratio. The very sharp null can also be somewhat deceiving, since the overall rearward performance of the quad is limited by the residual rear sidelobes. These lobes are less than 20 dB down from the main forward lobe in all cases. With these practical cautions noted, the models serve well as a point of departure for comparisons with other models.

Modeling rules for *NEC-2* strongly recommend that wires that parallel each other have their wire segment ends aligned for maximum accuracy. Although absolute alignment is not possible when combining antennas for the five upper HF ham bands, you can obtain reasonably good alignment. Each side of the 10-meter quad models uses seven segments, with an increase of two

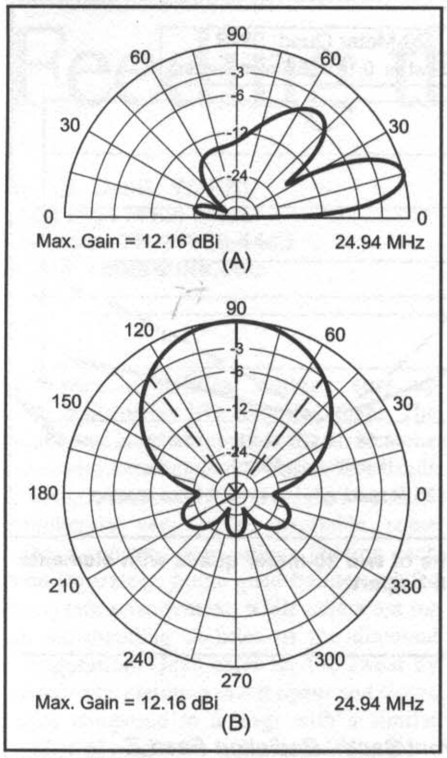

Fig 5—Elevation and azimuth patterns of a 12-meter quad at 35 feet ($^7/_8$ λ). Azimuth angle = 15°.

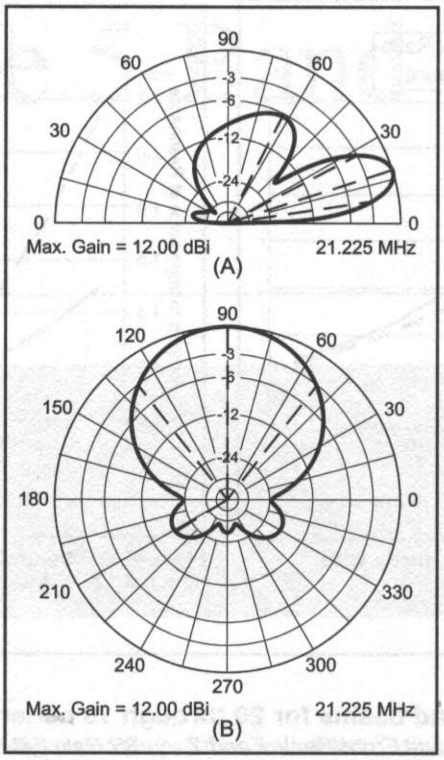

Fig 6—Elevation and azimuth patterns of a 15-meter quad at 35 feet ($^3/_4$ λ). Azimuth angle = 18°.

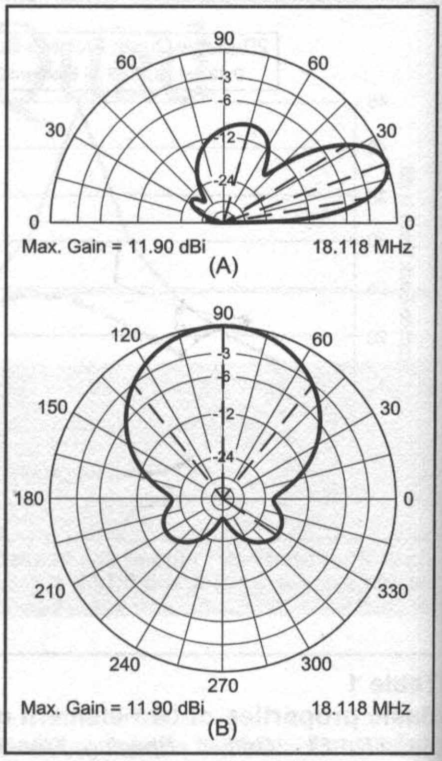

Fig 7—Elevation and azimuth patterns of a 17-meter quad at 35 feet ($^5/_8$ λ). Azimuth angle = 20°.

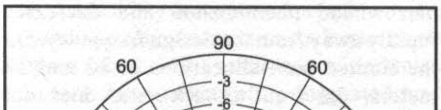

Fig 8—Elevation and azimuth patterns of a 20-meter quad at 35 feet ($^1/_2$ λ). Azimuth angle = 25°.

segments for each of the succeeding lower bands. The 20-meter quad uses 15 segments per side. I generated alternative models using one more segment per side and a split feed point (by dividing the bottom wire of the driven element into two wires) to meet certain special modeling requirements. For the basic quads, their performance is the same as the models with the bottom wire fed at its center and an odd number of segments per side. Both of these segmentation schemes fall well within the minima and maxima prescribed by *NEC-2* on all frequencies involved in the study.

After some experiments with duoband quads, a full five-band model of independent quads was designed and optimized along the lines of **Fig 10**. As one might expect, the close proximity of wires serving bands not in use detuned the elements of the active band. **Table 2** provides a comparison between the dimensions of monoband quad elements and the corresponding elements in the five-band array. Table 2 gives no gain or front-to-back figures, since the performance of each antenna in the array at its design center did not change significantly as a result of the small dimensional adjustments. If the table demonstrates anything, it is this: One cannot simply extract a single quad for a certain band from the array of which it is a part and expect to accurately model its performance characteristics. One must model the entire array of quad wires.

Although the performance of the independently fed quads is very similar to that of monoband quads, the feed-point impedance for each band is significantly altered by the presence of adjacent antennas. All of the monoband beams showed a resonant feed-point impedance of 136 to 138 Ω. In the combination array, the impedance ranges from roughly 50 Ω at 10 meters to about 112 Ω at 20 meters. The feed-point impedance for each band is listed in **Table 3**. It is likely that an antenna built on this model array would permit direct matching with 50-Ω coax on 10 through 15 meters, with a quarter-wave 72-Ω 2:1 matching section proving adequate for 17 and 20 meters. Frequency sweeps of the array on each band confirmed these design-frequency results, except for 10-meters, as noted below. In fact, with a 75-Ω feed line, 15 through 20 meters indicated less than a 2:1 SWR across the bands.

Modeling this array required considerable patience to wait for *NEC-2* to process large models and then to adjust dimensions and try again for resonance and maximum front-to-back ratio at the selected design

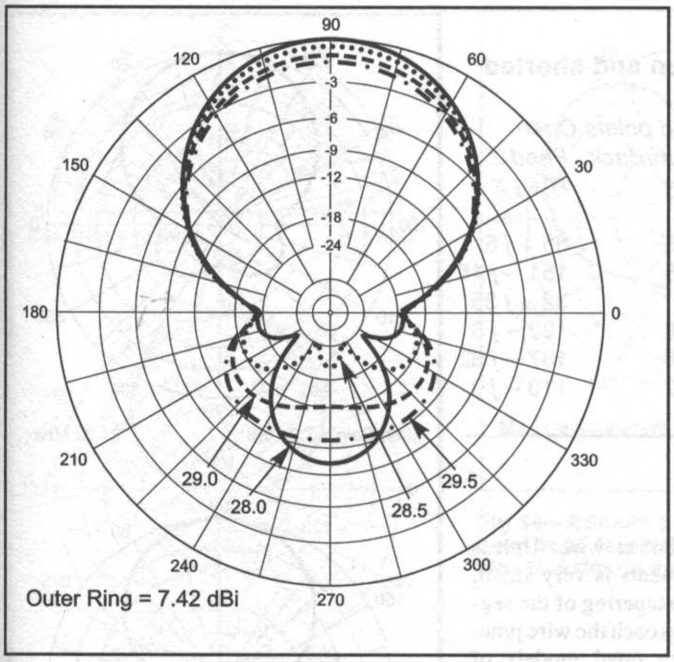

Fig 9—Free-space azimuth patterns for a 10-meter beam from 28 to 29.5 MHz in 0.5 MHz increments.

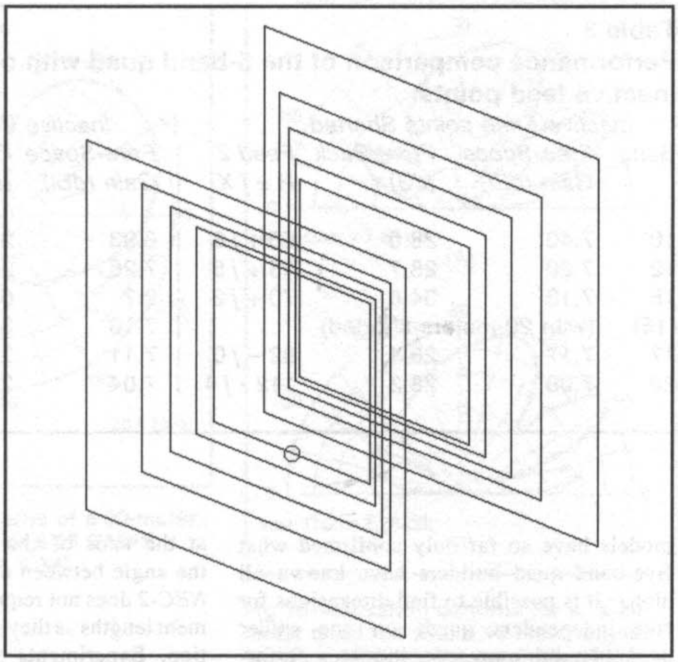

Fig 10—Wire outline of a 5-band, 2-element quad (minus the supporting structure).

Table 2

A comparison of the dimensions of 0.16 λ spaced independent monoband quads and independently fed quads arranged on a spider with a spacing of 0.16 λ for each quad.

	Independent Quad Dimensions			*5-Band Quad Dimensions*		
Band	*Dr. El. Ft/side*	*Refl. Ft/side*	*Spacing Feet*	*Dr. El. Ft/side*	*Refl. Ft/side*	*Spacing Feet*
10	8.73	9.23	5.50	8.63	9.28	5.50
12	9.98	10.54	6.31	9.90	10.22	6.31
15	11.72	12.38	7.416	11.64	12.10	7.416
17	13.71	14.464	8.684	13.70	14.10	8.684
20	17.54	18.46	11.10	17.62	18.16	11.10

center frequencies. Even more time-consuming were frequency sweeps for the array with each band activated in succession. The results of this survey showed that the properties of the concentric array of five quads, each spaced 0.16 λ, were closer to the properties of independent quads more closely spaced. Gain and front-to-back ratio fell off more rapidly each side of the design center frequency, while the 2:1 SWR bandwidth was somewhat narrower. On 12 and 17 meters, the 100-kHz bandwidth presented no problems with respect to any of the properties. On 20 and 15 meters, the front-to-back ratio dropped to between 10 and 12 dB at the lower band edge. Only on 10 meters did the SWR bandwidth narrow problematically, shrinking to about 500 kHz with the configuration chosen for the model.

As the tables show, the design center frequency for each band was midband, except for 10 meters, where 28.5 MHz was selected. Actual quads should use a point about 1/3 of the way up a band as the design center, since the SWR increases much more rapidly at frequencies below design center than above it. However, the maximum gain of a quad occurs somewhat lower in frequency than maximum front-to-back ratio. Designers may choose maximum gain as their design center, although the maximum is not significantly higher than the gain of these models. Above the maximum front-to-back ratio frequency, both gain and front-to-back ratio fall off gradually, even though the feed-point impedance does not change drastically. At some point well above the design frequency, the antenna turns into what is essentially a mechanically complex dipole.

Opening or Shorting Feed Points for Unused Bands?

The concentric arrangement of the five quads described in Table 2 has one other important property: The dimensions were derived with all loops closed. In other words, the feed points of the unused quad driven elements were shorted. If the feed points are left open, the performance of the active quad degrades and the feed point is significantly off resonance. On 10 and 20 meters, where adjacent loops are only on one side of the active antenna, the feed-point impedance changes the least, but performance is noticeably down. Where the feed-point impedance changes more radically, it becomes generally capacitively reactive, calling for a longer driven element—and likely a longer reflector as well. Table 3 summarizes the comparative performance of the five-band quad with shorted and open feed points for the inactive antennas.

The one band on which performance degrades below a usable level is 15 meters for open unused loops. On this band, all semblance of directionality disappears. The problem is the open-circuited 20-meter driven element. Simply by shorting the 20-meter driven element at its feed point, you can return the 15-meter beam to its normal directional pattern, as shown by the extra line in the table. Since at least one band requires the shorting of at least one other driven element to obtain proper performance, it is likely wise to design the feed-line switching system so that every band sees a short across the unused driven elements. Physical switching or transmission line sections from the feed point to the switch may be used to achieve this result.

Whatever the particulars, these complex

Table 3

Performance comparison of the 5-band quad with open and shorted inactive feed points.

	Inactive Feed points Shorted			*Inactive Feed points Open*		
Band	*Free-Space Gain (dBi)*	*Front/Back (dB)*	*Feed Z* $R \pm jX$	*Free-Space Gain (dBi)*	*Front/Back (dB)*	*Feed Z* $R \pm jX$
10	7.40	28.0	$50 + j6$	6.93	24.5	$85 + j6$
12	7.20	28.7	$58 + j5$	7.26	20.8	$151 - j45$
15	7.13	34.6	$70 + j2$	2.7	0.2	$32 - j35$
(15)	(with 20-meters shorted)			7.16	31.6	$122 - j8$
17	7.17	26.4	$82 - j0$	7.11	21.8	$137 - j32$
20	7.08	28.3	$112 - j4$	7.04	25.7	$118 - j0$

models have so far only confirmed what five-band quad builders have known all along: It is possible to find dimensions for five independent quads on one spider assembly and to preserve the basic performance of each antenna. Moreover, the modeler has taken the easy way out, since he does not have to face the physical challenge of creating a weatherproof switching system precariously mounted near the top of the tower or of running five separate feed lines without overstressing the quad arms and spider!

THE COMMON-FEED MULTI-BAND QUAD

Because feeding the five antennas in a full HF quad array can be a daunting design, building, or maintenance task, many quad users have opted for single-feed models. All of the driven elements are brought to a single feed point, usually somewhere in the region between the natural 10-meter and 15-meter feed points.

Where the frequencies of the two antennas are not harmonically related and where the frequencies are sufficiently separated, the single-feed arrangement can work well. **Fig 11A** and Fig 11B display the free-space azimuth patterns of a two-band quad model for 15 and 20 meters. Dimensions for the beam are not far off those for monoband quad beams for each band. The driven elements require the greatest alterations to the perimeter due to the angling of the 20-meter wires toward the feed point at the center of the lower 15-meter beam wire. **Fig 12** shows the general wire outline of the beam. (Another convenience for modeling is that you needn't model the support arms, hubs and other non-metallic structural features of an antenna.)

Multiband beams follow the general procedure for modeling any single feed of multiple linear elements. A short section of wire with at least three segments is fed at the center. The wires for each element join at the ends of this central wire. Unless the angle between elements is very small, *NEC-2* does not require tapering of the segment lengths as they approach the wire junction. Experiments with quad models of varying complexity shows only small differences of resonant frequency occasioned by tapering or not tapering segment lengths as they approach the apex of the angle.

The design frequencies—21.22 and 14.17 MHz—are not harmonically related. Moreover, the 15-meter frequency is widely separated from the 20-meter frequency by a factor of about 50%. At most, each antenna shows a slight detuning effect upon the other, an effect easily compensated for by readjusting element lengths. In fact, it is difficult to separate driven element detuning effects from the length changes necessitated by angling the 20-meter wires. Similar results have been obtained for such combinations as 10 and 12 meters, for 12 and 20 meters, and for 12, 15 and 20 meters. However, these results do not account for the harmonic relationships between 10 and 20 meters.

The late Lew McCoy, W1ICP, long worried about the interaction of the two bands in a single-feed antenna. In correspondence, we agreed that significant power must flow in the 20-meter element, which is approximately two-wavelengths long at 10 meters and has an independent 10-meter feed-point impedance of something over 200 Ω. We both thought the perhaps as much as 20% of the power on 10 meters would route itself through the 20-meter driven element. The situation computed by models is actually worse than we thought, with as much as a third of the current driving the 20-meter elements.

Fig 13 shows the elevation and azimuth plots for a two-band quad for 10 and 20 meters at 35 feet, using a single feed point and driven by a 28.5 MHz source. The gain is down by about 3 dB compared to a monoband quad for 10 meters at the same height. The front-to-back ratio is equally meager. Moreover, the feed point is highly reactive, $95 + j\,135\ \Omega$. The reactance could not be eliminated by changing the size of the driven element, since this set of elements in the quad was optimized for maximum gain. By reducing gain through enlarging the reflector element, the front-to-back ratio can

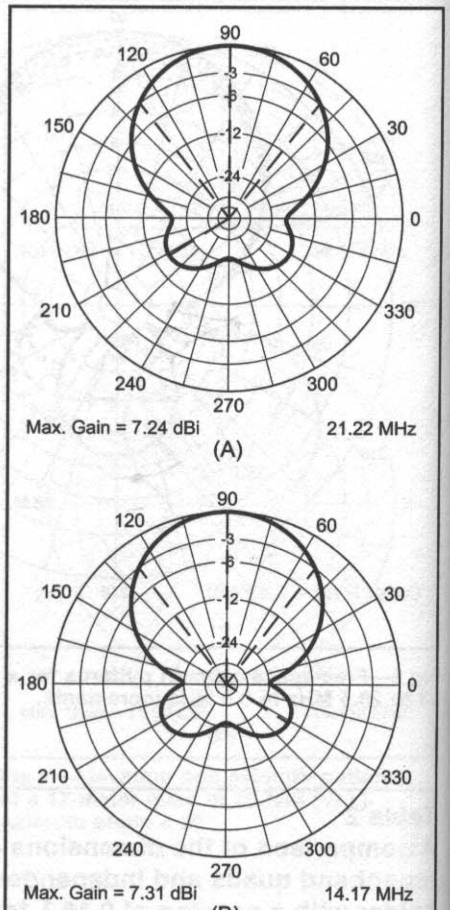

Fig 11—Free space azimuth patterns of a 2-band single-feed quad beam model for 15 meters (at A) and 20 meters (at B).

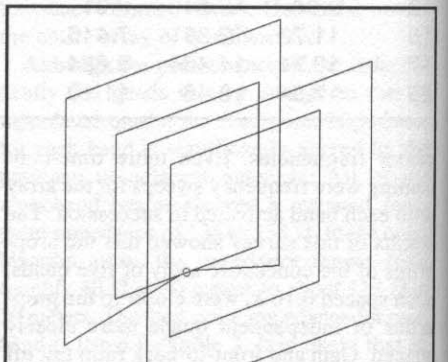

Fig 12—Wire outline of a 15/20-meter quad using a single feed.

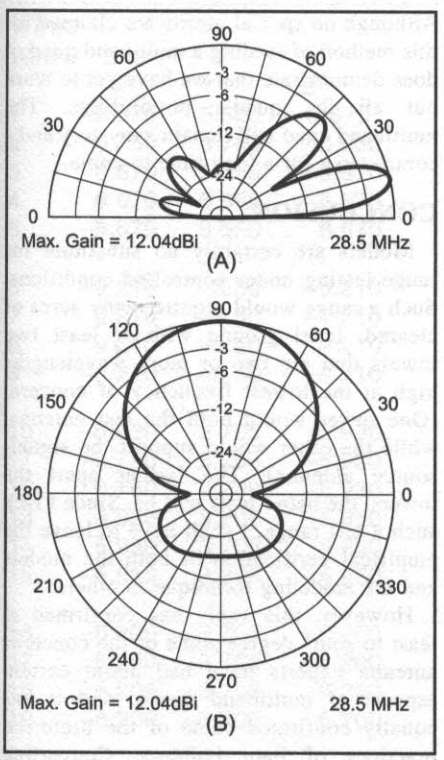

Fig 13—Elevation and azimuth patterns of a 10/20-meter quad at 35 feet fed with a 28.5 MHz signal. Azimuth angle = 14°.

be raised to something over 15 dB, but the antenna still remains inductively reactive on 10 meters.

An examination of the current division between the 10- and 20-meter driven elements in this model shows a 66% to 34% split in the segments immediately adjacent to the common segments. The relatively high currents in the 20-meter elements contribute to the misshapen pattern, which lacks the front-to-side ratio common to monoband quads. Patterns taken of a 20-meter quad fed on 10 meters show high radiation to the forward quartering sides and less radiation straight forward, as illustrated in **Fig 14**.

No modeled configuration of 10- and 20-meter quads fed together has produced anything much better than the case presented. The 10-meter characteristics of the antenna change rapidly across the band, with the gain dropping to just over 6 dBi at the band edge. From 28 to 29 MHz, the feed-point impedance goes from 75 + *j* 82 Ω to 130 + *j* 175 Ω. The gain can be improved slightly by setting the 20-meter parameters to peak just below 14 MHz. The 10-meter gain climbs by about 0.5 dB for each frequency, with the front-to-back ratio reaching a maximum just below 18 dB at 29 MHz. However, the 10-meter feed-point impedance climbs also, now ranging from 110 + *j* 90 Ω at 28 MHz to 160 + *j* 175 Ω at 29 MHz. Moreover, 20-meter performance also declines.

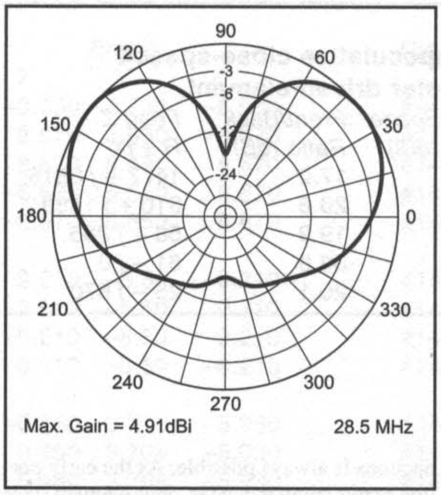

Fig 14—Azimuth patterns of a 20-meter quad at 35 feet fed with a 28.5 MHz signal. Azimuth angle = 14°.

You can lower the feed-point reactance for 10-meter operation by judicious reductions in the 10-meter driven-element dimensions. Depending upon the configuration, the impedance runs between 120 and 195 Ω, with only a small reactive remnant. However, under these conditions, the 10-meter elements are taken almost wholly out of play. Nearly all of the radiation from a 10-20-meter single-feed quad is then controlled by the 20-meter loops.

Fig 15 shows two elevation patterns for model quads at 35 feet. At A is the pattern of a monoband 20-meter quad fed with a 10-meter signal. The feed-point impedance models at about 280 + *j* 85 Ω. At B is a duoband 10-20-meter quad fed with a 10-meter signal. The quad has been optimized for the lowest impedance, about 120 + *j* 13 Ω. Compare this pattern with the 10-meter monoband quad pattern for a 35-foot antenna height. The lowest angle of radiation (about 13°) is almost wholly absent and just barely shows compared to the 20-meter quad elevation pattern. The angle of maximum radiation between the monoband 20 and the duoband 10-20-meter quad differs by only 2°. The differences are just enough to verify that the 10-meter element is present, but it hardly does much.

The current distribution in the driven-element wire segments adjacent to the common feed-point segments shows the same information in another manner. The current ratio between the 20-meter and 10-meter driven elements is more than 3.5:1 in favor of the 20-meter element, with the 10-meter currents being almost out of phase with the 20-meter currents.

These effects are not peculiar to one particular model. Duoband models using anything from 0.125 λ to 0.21 λ spacing

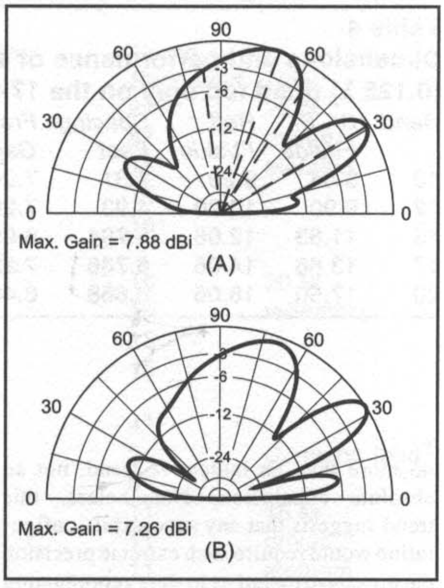

Fig 15—Elevation patterns for A. a 20-meter quad fed with a 10-meter signal, and B. a 10/20-meter quad adjusted for resonance on 10-meters and fed with a 10-meter signal.

show the same effect with only minor variations. Triband 10-15-20-meter quads also show the effect, with the 15-meter elements having negligible consequences for the relationship between the 10-meter and 20-meter elements. Moreover, to bring the impedance of the 10-meter element down to something close to resonance, it is necessary to optimize the 20-meter loop for a higher frequency (14.25 MHz or higher) and the 10-meter element for a lower frequency (28.0 MHz) relative to the design centers used in this study. Otherwise, the feed-point impedance at 10 meters remains highly inductively reactive.

There appears to be no magic combination that permits the 10-meter quad in the single-feed combination to approach the performance of an independently fed quad. Three-band models for 10, 15 and 20 show nothing better, since the 15-meter elements are for all significant purposes out of the circuit on 10 meters, with less than 1/6 the current levels of the other elements combined. Perhaps there are better models out there, but my tentative conclusion is that a single-feed combination of 10- and 20-meter quads is likely to be a poor performer that shows less gain on 10 meters than a two-element Yagi, has an equally low front-to-back ratio, and is hard to match.

No matter how many models one examines, there is always the possibility that there exists an unexamined configuration or a revised modeling technique that might overcome the consequences that have appeared throughout the ones in my files. Therefore, these results can be considered

Table 4

Dimensions and performance of a speculative close-spaced (0.125 λ) quad fed only on the 17-meter driven element.

Band	*Dr. El. Ft/side*	*Refl. Ft/side*	*Spacing Feet*	*Free-Space Gain (dBi)*	*Front/Back Ratio (dB)*	*Feed Z R ± jX*
10	8.64	9.20	4.31	7.24	17.0	1477 – *j* 3815
12	9.90	10.20	4.93	7.26	20.6	310 + *j* 1489
15	11.63	12.06	5.794	6.95	19.9	58 + *j* 385
17	13.66	14.06	6.786	7.22	33.0	61 – *j* 0
20	17.50	18.06	8.668	6.46	20.1	25 – *j* 670

no more than an indicative trend, not an absolute conclusion. Nonetheless, this trend suggests that any successful configuration would require such extreme precision during construction as to defy reproduction by the average ham antenna builder.

One final note: Some ham builders have claimed to achieve a good match with a single feed for either three-band or five-band antennas. Nothing in this modeling exercise disputes these claims. What has not been in clear evidence is a correspondence between feed-point impedance and monoband-level antenna performance across all bands covered by the single feed quad. At most, a modeling study such as this puts a few quantitative indicators atop the theoretical worries expressed by numerous past writers on the subject.

FEEDING THE INDEPENDENTLY FED MULTIBAND QUAD

The impetus for using a single feed point for more than one quad was to simplify the array and get away from feed lines, relays and other switching necessities. If the models are reasonably accurate, even if not absolutely conclusive, then the quad builder is best advised to feed 10 meters separately. To avoid adjacent band effects, it may be best only to combine 20 and 15 and also 12 and 17 meters. Although this procedure does not yield a single common feed point, it does reduce the feed requirements by 40%. Of course, a full five-position switch for individual feed connections is always possible. As the early portion of this study indicates, once element sizes are adjusted for the proximity of wires for other bands, full two-element quad performance is possible.

A FINAL ALTERNATIVE

There is one final alternative. **Table 4** presents the dimensions of a close-spaced (0.125-λ) quad with independent driven elements. The performance characteristics for all bands except 17 meters are a bit lower in this free-space model than you might expect, but they are improvements over a two-element Yagi. Still, the patterns for the highest two bands show smaller than normal front-to-side ratios.

What the model suggests, however, is a somewhat different solution to the problem of feeding a multiband quad with a single feed line. In this model, only the 17-meter element is actually fed. Inter-element coupling supplies all the rest. Of course, as Table 4 shows, the impedances for the various bands would test the mettle of any wide-range antenna tuner. However, if you can solve the problem of keeping a parallel feed line from imbalance as it proceeds up the tower, a single-feed quad is possible with only a "little" reduction in performance relative to independently fed quads.

Models indicate that performance of this arrangement is likely to be best with close-spaced quads. Increasing the spacing from 0.125 λ to 0.16 λ decreased the forward gain on most of the indirectly fed bands. Although no special merits are claimed for this method of feeding a multiband quad, it does demonstrate that we have yet to work out all the quad's possibilities. The multiband quad will remain a mystery and a controversy for a long time to come.

CONCLUSION

Models are certainly no substitute for range testing under controlled conditions. Such a range would require many acres of cleared, level ground with at least two towers that are two or more wavelengths high at the lowest frequency of concern. (One tower would hold the test antenna, while the other would support the signal-source antenna). The farther apart the towers, the better tests will be. Since I lack such a test range, I shall have to leave the empirical verification of both the models and the modeling technique to others.

However, this study has confirmed at least to some degree some of the concerns antenna experts have had about certain aspects of multiband quads, and it has equally confirmed some of the preferred practices of ham builders. Converting qualitative suspicions into quantitative data may be a small step in the direction of better understanding an eternally controversial antenna: the cubical quad.

APPENDIX

It would be inappropriate to suggest that any of the results reported here are in any way reliable without exposing something of the methods involved to the scrutiny of others. Therefore, I am including the following model description of a two-band quad—for 15 and 20 meters—so that others can refine the modeling techniques, if needed (see next page). [Files for other W4RNL quad designs are located on the ARRLWeb at **http://www.arrl.org/8608**.—*Ed.*]

I have used descriptive terms for the elements of the model, rather than the *NEC-2* input file labels, which may be unrecognizable to inexperienced modelers. For those who are not familiar with the parameters necessary to using antenna-modeling programs, I have added a few side notes.

Wires

Wire #	*End 1*			*End 2*			*Diameter*	*No. of*	
	X	*Y*	*Z*	*X*	*Y*	*Z*		*Segments*	*Note:*
1	−8.670	5.500	−8.670[1]	−0.750	3.708	−5.930	#14[2]	8[3]	20 M
2	0.750	3.708	−5.930	8.670	5.550	−8.670	#14	8[3]	driven
3	8.670	5.550	−8.670	8.670	5.550	8.670	#14	15	element
4	8.670	5.550	8.670	−8.670	5.550	8.670	#14	15	
5	−8.670	5.550	8.670	−8.670	5.550	−8.670	#14	15	
6	−9.210	−5.50	−9.210	9.210	−5.50	−9.210	#14	15	20 M
7	9.210	−5.50	−9.210	9.210	−5.50	9.210	#14	15	reflector
8	9.210	−5.50	9.210	−9.210	−5.50	9.210	#14	15	
9	−9.210	−5.50	−9.210	−9.210	−5.50	−9.210	#14	15	
10	−5.930	3.708	−5.930	−0.750	3.708	−5.930	#14	4[3]	
11	−0.750	3.708	−5.930	0.750	3.708	−5.930	#14	3	Common feed[3]
12	0.750	3.708	−5.930	5.930	3.708	−5.930	#14	4[3]	
13	5.930	3.708	−5.930	5.930	3.708	5.930	#14	11	15 M
14	5.930	3.708	5.930	−5.930	3.708	5.930	#14	11	driven
15	−5.930	3.708	5.930	−5.930	3.708	−5.930	#14	11	element
16	−6.200	−3.708	−6.200	6.200	−3.708	−6.200	#14	11	15 M
17	6.200	−3.708	−6.200	6.200	−3.708	6.200	#14	11	reflector
18	6.200	−3.708	6.200	−6.200	−3.708	6.200	#14	11	
19	−6.200	−3.708	6.200	−6.200	−3.708	−6.200	#14	11	

Notes

1. For ease of reading, the wires making up the elements have been divided into groups, while an actual *NEC-2* input description would be continuous. Dimensions in this example are given in feet. *NEC-2* requires conversion into meters, which commercial programs do automatically.
2. Wire diameter is given in terms of AWG wire size; *NEC-2* actually uses the radius, but commercial programs provide automated conversions. #14 wire has a diameter of 0.0641 inches.
3. Wire segmentation was 15 per side for 20 meters and 11 per side for 15 meters. Five segments per side would have met *NEC-2* minimum recommendations, but the greater number is an artifact of the standardized system used for concentric five-band quads. Lines 1, 2, 10, and 12 indicate wires leading to or from the common feed segment, which is wire 11. The feed segment is sized to provide a minimum of three segments that do not seriously violate the recommended maximum ratio of 2:1 for adjacent segments of the wires joining at the ends of the common feed. Doubling the number of segments per side, which makes each segment nearly the same length as the segments in the common feed wire, shows no significant change of output data. Whenever working at or near the recommended limitations of a modeling program, the modeler should make such checks to ensure the reasonableness of the model and its outputs.

Wire Loss: Copper: resistivity = 1.74×10^{-8} Ω/meter. Most commercial programs provide a selection of common antenna materials.

Ground: Free space is used in this example, but figures for ground conductivity and dielectric constant are required for antennas over a real ground. Commercial programs offer a set of preset ground conditions for non-quantitative selection. For elevated horizontal antennas, the actual ground type chosen makes little difference for model comparisons so long as the same ground specifications are used throughout. For most comparative purposes, selecting "medium" earth/ground conditions has become a *de facto* standard, unless one is investigating antennas over specific local conditions. *NEC-2* and *MININEC* presume flat ground, with few options for following the curvatures of the real earth over which we erect real antennas. Local geometry may require other software to account accurately for detailed terrain variations.

Loads and Transmission Lines: This model (and every other in the study) uses no lumped constant loads or transmission lines.

Source: Wire 11, Segment 2 (center of common feed segment); Type of source = voltage: 1 V @ 0° phase angle. Source SWR is calculated against a presumed 50-Ω feed line.

Output Pattern Specifications: 0-360° horizontal at 0° elevation (or 90° down from zenith).

Frequency Specification: 21.22 MHz and 14.17 MHz, separately. Frequency sweeping using start, stop and interval frequencies can be used in *NEC-2*.

These notes should permit any modeler to replicate and evaluate the models used in this study.

The Odd Quad

By William H. Scannell, KB4CCM
617 Pitts Road
PO Box 81
Catawba, SC 29704-0081

You don't have a tower but you'd like to put up a rotatable 2-element quad? Take a look at KB4CCM's "Odd Quad"

I have always heard that necessity is the mother of invention. Well, I had a necessity. Most of my hamming has been with simple horizontal wires—minimum gain and no rotation. I dreamed of an antenna that could be rotated and that had at least 5 dB gain more than a dipole.

It seemed to me that a 2-element quad would fit my requirements nicely. It would be light, inexpensive to build (using locally available materials) and would have enough gain to make the project worthwhile. As it turned out, there were more problems to be solved than I had anticipated, the most significant being that I had no manmade vertical structure on which to mount a rotating antenna.

Turning Things Upside Down

On my property are many tall pine trees that I use to support my wire antennas. Why not figure some way of mounting and rotating a conventional quad between two pines? This sounded reasonable to me until I recognized another problem—how would I rotate quad spreaders past the support ropes? Since I had settled on a quad, I read Bill Orr's book, *Cubical Quad Antennas* and discovered that wire configuration did not matter, so long as the area within the wire loops was as large as possible. I could use a square, a diamond or a delta loop configuration.

So I thought to myself, "Why couldn't I hang the rotator with a quad *underneath* it?" I envisioned a delta-loop quad, with one horizontal spreader each for the driven and reflector elements. Then gravity would suspend the wire loops beneath the spreaders to form the two delta loops. **Fig 1** illustrates the concept.

Just as soon as I finished congratulating myself for thinking outside the box, I recognized another problem—I had to find a lightweight rotator that I could mount in a convenient fashion. RadioShack's TV rotator (RS 15-1225) came immediately to mind. The clamps at the top and bottom were perfect for doing what I wanted to do. According to the local RadioShack manager, the rotor would rotate a 50-pound load. My upside-down quad was going to be much lighter than that!

With the support structure, rotation and general quad configuration problems seemingly solved, the next step was to find suitable materials. Realizing that this project might not pan out as expected, I searched my garage and junk box for anything left from other antenna projects, home repairs or "honey-do's" that I could salvage. I found a 10-foot piece of 1×1-inch treated wood for the boom and borrowed from my wife four 1×½-inch, 9-foot long strips of white pine that she cuts in half to stake up plants. The 9-foot lengths seemed to dictate that this was to be a 15-meter monoband quad.

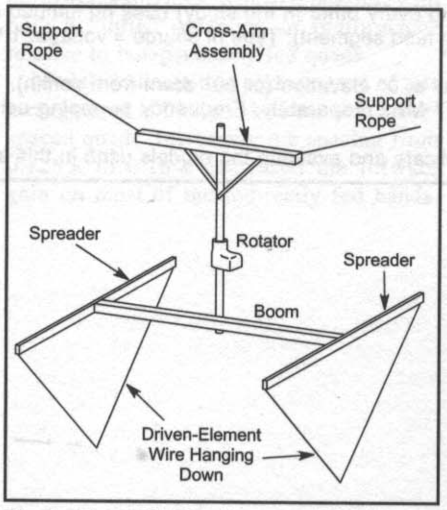

Fig 1—The Odd Quad concept. The rotatable quad is suspended beneath the rotator.

Like most hams, I had plenty of RG-8U coax, barrel connectors and PL-259 and SO-239 connectors. I also had plenty of #14 stranded insulated wire of various lengths from previous antenna projects. I did have to buy some items: the rotator, control cable and a 5-foot length of steel mast, all from RadioShack. I found bolts, nuts and washers at my local hardware store.

The next thing to consider was how to attach the rotator to the antenna boom. I first considered using a thick piece of plywood bolted to the boom. I could then U-bolt this to a 2-foot section of steel mast on which to mount the TV rotor. However, Royce Goodman, WA4AFE, gave me a thick fiberglass square he thought would be stronger. See **Fig 2**, a photo of the rotator, the fiberglass mast-to-boom plate and the boom. **Fig 3** is a drawing showing details of this mast-to-boom assembly.

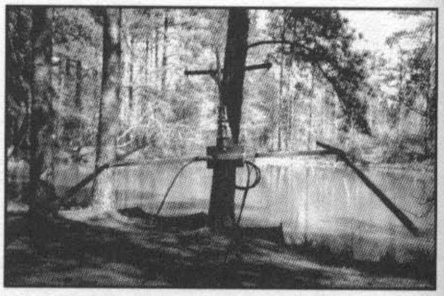

Fig 2—Photograph of the Odd Quad before it is pulled up into the tall pine trees.

With the boom-to-rotator problem solved, I next considered how to attach the spreaders to the ends of the wooden boom, which I had cut to a length of 9 feet. This is 0.194 λ at 21.2 MHz (0.194 × 984/21.2). Since I was not confident that my Odd Quad would be functional enough for a permanent installation, I mounted two shelving brackets on either side of the boom ends with wood screws. I was afraid the 1×1/2-inch strips of white pine would split, so I overlapped 1 foot of each strip and attached the overlapped portion of the spreaders to the shelving brackets at the boom ends, also with wood screws. The spreaders then measured 14 feet each, long enough for the 15-meter quad loops, which were cut to the usual quad dimensions of Driven-Element Loop = 1005/ F (MHz) and Reflector Loop = 1030 / F (MHz).

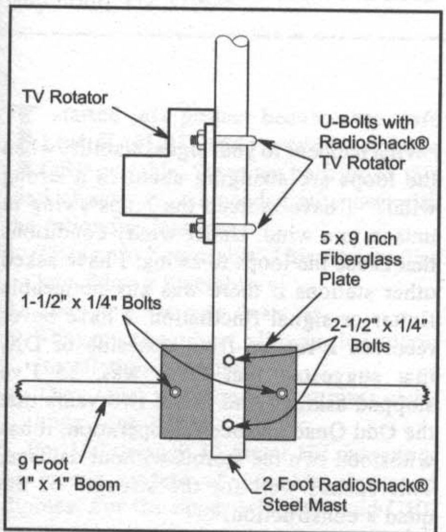

Fig 3—The boom-to-rotator plate.

To complete the project, I tightened the top U bolts supplied with the TV rotor around the 3 feet of steel mast. I needed cross members from the rotator mast to the boom to strengthen the upper part of the quad. I found a piece of angle aluminum from an old deer stand and connected this with a U bolt and a bolt through the mast to the rest of the cross-arm assembly. A sturdy connection is important here because beneath the rotor everything rotates, while the cross-arm assembly above is held stationary by the support ropes to the trees. Notice the eyebolts at the ends of the cross arm to which the pull up ropes are attached. See **Fig 4**.

I calculated the driven and reflector loop lengths and cut them. I attached the wires along the length of the spreaders using plastic tie-wraps and a few wraps of electrical tape. The Odd Quad had to be fed at the center of the driven-element spreader with coax. To help match the impedance, I used an electrical quarter wave of 75-Ω coax rolled into an RF choke and run out the boom to a SO-239 connector at the center of the driven loop. A tuner in the shack easily brought the SWR to 1:1. See **Fig 5**.

Fig 6 is a photograph of my Odd Quad pulled up into position in the air. The effective height is 35 feet to the center of the driven loop. Nylon ropes support the Odd Quad over the top of the pine trees. I wish the wire loops had shown up better in the photographs but unfortunately they don't.

Getting the Odd Quad in the Trees

I launched an arrow from my 50-pound hunting bow, conveying monofilament line, which is then used to pull up the main ropes. Pulleys are fed to these ropes and the ropes connected to the outer ends of the cross arm assembly are fed through these pulleys. The pulley arrangement helps prevent wind action on the tree from fraying the support ropes. My quad has been up for two years without any problems. I would recommend either painting the spreaders with wood preservative or exterior paint.

I also recommend that the trees selected be as close together as possible, yet far enough apart to allow rotation past any limbs. I found that if the trees were very far

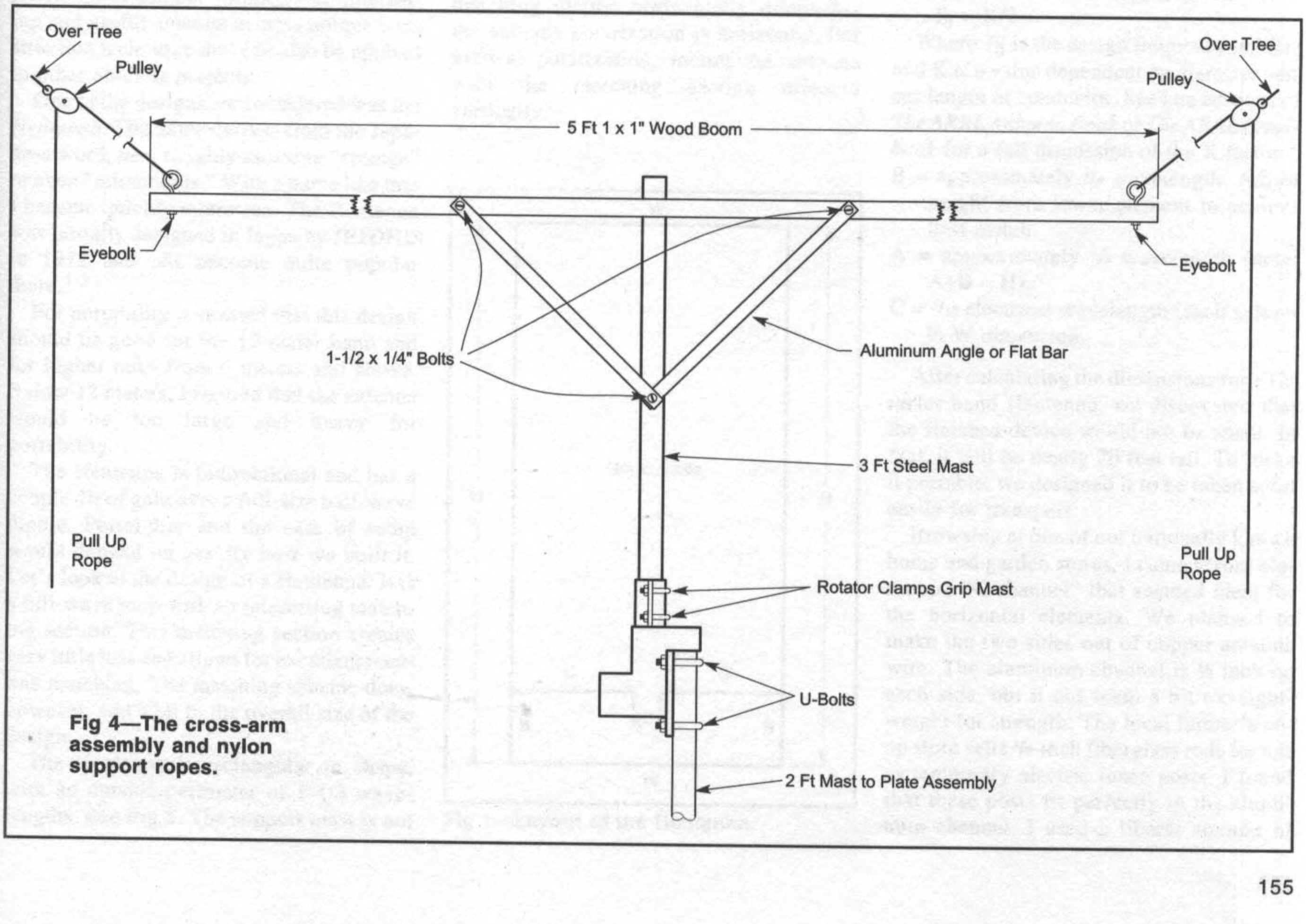

Fig 4—The cross-arm assembly and nylon support ropes.

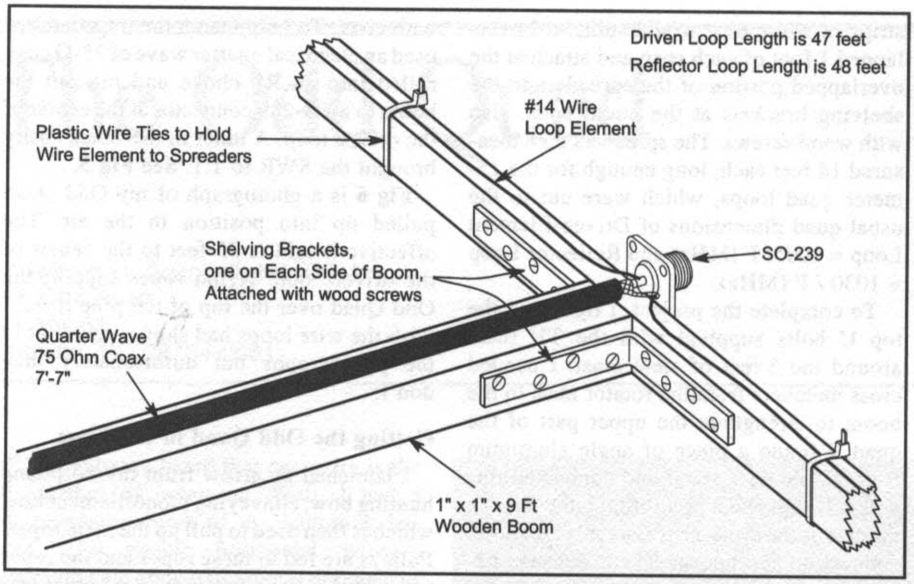

Fig 5—Details of the spreader attached to the boom at the Driven Element end.

Fig 6—Photograph of completed Odd Quad at 35 feet in height.

apart, it was difficult to pull the antenna up to an effective height.

Results

The first time I connected the Odd Quad to my rig I knew I had a winner. Signal strengths from DX as well as stateside stations were from 2 to 3 S units better than any of my other antennas, which were an extended double Zepp, a full-wave delta loop, a half square and two vertical ground planes. The signal reports I received were very encouraging. Often, the DX station would say, "You are the strongest station I have heard on the band today running only 100 watts." This performance convinces me that the Odd Quad performs like a conventional quad, despite its unusual mounting arrangement.

The most frequently asked question after I have described the quad on the air was, "What happens to your signal stability when the loops are swinging about in a strong wind?" I have noticed the loops swing in unison in a wind. Under windy conditions that cause the loops to swing, I have asked other stations if there was any noticeable flutter or signal fluctuation. I have never received a report, from stateside or DX, that suggested that there was, so I've stopped asking. And in the two years that the Odd Quad has been in operation, it has withstood two ice storms without damage. This speaks well for the strength of the quad's construction.

I have some advice for hams who think their antenna problems are beyond solution. Think outside the box, or perhaps under it!

This Hen is No Chicken

By Benson Smith, KA4LBE
1324 Sunset Park Dr
Seymour, TN 37865

KA4LBE discusses the novel construction method used for his version of the "Hentenna"

I started this project because my wife Lois, KA4LBD, and I wanted to operate QRP portable. Since we both enjoy this kind of activity, we needed antennas with the following features:

1. They must be portable. This may require knockdown assembly.
2. They must be easy to set up.
3. They must be robust, allowing long-term installation if desired.
4. They must work on a short mast or be hung from trees.

For 160 through 15-meter HF operating, we use a system of portable shortened dipoles. For the upper HF, VHF and UHF bands, however, we wanted an antenna that had some gain. Of course, it would still have to meet our portability requirements. This article describes our solution—an interesting and useful antenna using a unique construction technique that can also be applied to other antenna projects.

One of the designs we considered was the *Hentenna*. The name derives from the Japanese word, *hen*, roughly meaning "strange" or even "miraculous." With a name like that I became quickly interested. The Hentenna was initially designed in Japan by JE1DHU in 1972 and has become quite popular there.[1-3]

For portability it seemed that this design should be good for the 12-meter band and for higher ones from 6 meters and above. Below 12 meters, I figured that the antenna would be too large and heavy for portability.

The Hentenna is bidirectional and has a couple dB of gain over a full-size half-wave dipole. Portability and the ease of setup would depend on exactly how we built it. Let's look at the design of a Hentenna. It is a full-wave loop with an interesting matching section. This matching section creates very little loss and allows for excellent feedline matching. The matching scheme does, however, add a bit to the overall size of the design.

The Hentenna is rectangular in shape, with an outside perimeter of 1-1/3 wavelengths. See **Fig 1**. The support mast is not shown in Fig 1, but if it were it would be centered vertically through the upper and lower W sections. The antenna is fed through a matching section composed of C-C, the two B sections and the lower W section. Mounted as shown—with the matching section horizontally oriented—the antenna polarization is horizontal. For vertical polarization, mount the antenna with the matching section oriented vertically.

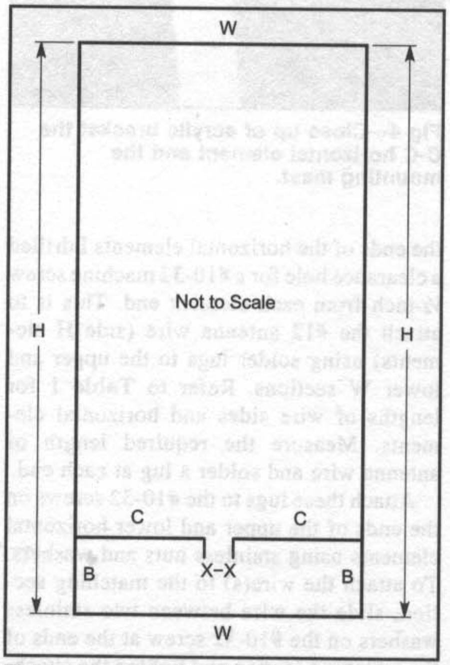

Fig 1—Layout of the Hentenna.

The antenna is fed at points X-X, where you should use a 1:1 current balun. The dimensions of the elements are determined by:

W = $\frac{1}{6}$ electrical wavelength (feet) = $984/F_0 \times K/6$

H = $\frac{1}{2}$ electrical wavelength (feet) = $984/F_0 \times K/2$

Where F_0 is the design frequency in MHz and K is a value dependent on diameter versus length of conductor. See late editions of *The ARRL Antenna Book* or *The ARRL Handbook* for a full discussion of the K factor.[4]

B = approximately $\frac{1}{6}$ wavelength. Adjust height from lower element to achieve best match.

A = approximately $\frac{1}{3}$ wavelength (note: A+B = H).

C = $\frac{1}{12}$ electrical wavelength (each side) = ½ W dimension.

After calculating the dimensions for a 12-meter band Hentenna, we discovered that the finished device would not be small. In fact, it will be nearly 20 feet tall. To make it portable, we designed it to be taken apart easily for transport.

Browsing at one of our nationally known home and garden stores, I came across aluminum "C channel" that seemed ideal for the horizontal elements. We planned to make the two sides out of copper antenna wire. The aluminum channel is ½ inch on each side, but it did seem a bit too lightweight for strength. The local farmer's co-op store sells $\frac{3}{8}$-inch fiberglass rods for use as temporary electric fence posts. I found that these posts fit perfectly in the aluminum channel. I used a liberal amount of

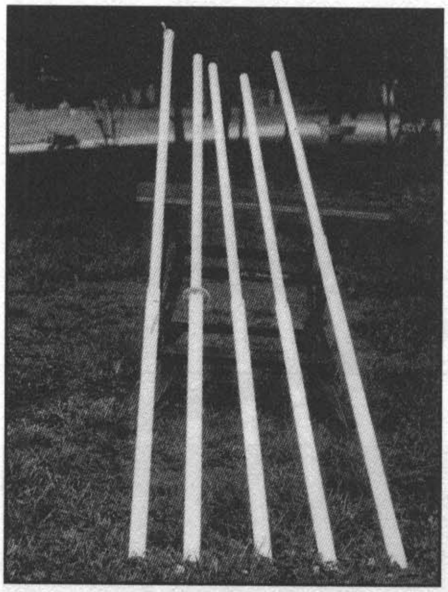

Fig 2—Mast sections used by KA4LBE, made of Schedule 40 PVC pipe.

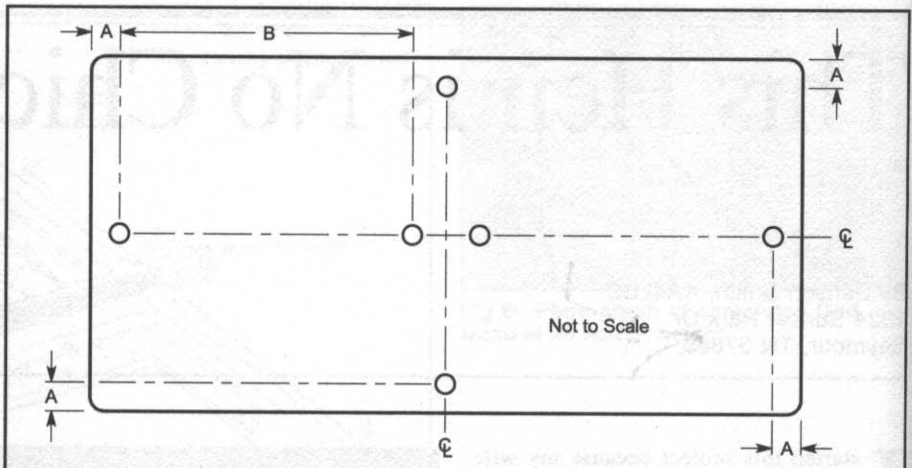

		Size (inches)					
		A	B	C	D	1	2
Matching Ele.	(1 pc)	1/2	3-1/2	4	2	13/64	1/4
Upper and Lower Ele.	(2 pcs)	1/2	3	4	2	13/64	1/4

Fig 3—Acrylic bracket used to mount horizontal elements to mounting mast. These are 4×8×¼-inches thick.

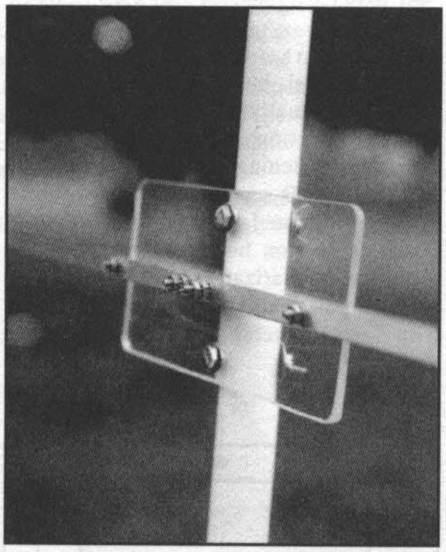

Fig 4—Close-up of acrylic bracket the C-C horizontal element and the mounting mast.

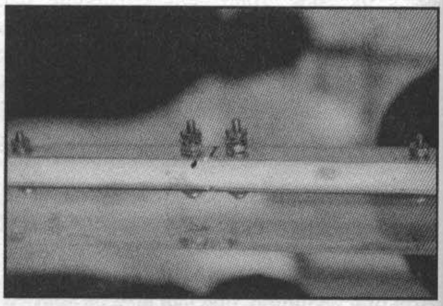

Fig 5—Close-up of the center of the C-C horizontal element, showing the fiberglass reinforcing rod and the feed point.

overnight-setting epoxy to glue the rods permanently in place after dimensions were finalized. This stiffened up the C channels nicely.

I mounted the elements so that the open side showing the fiberglass rod faced downward. We debated using a supporting mast or a rope suspension, but decided on a collapsible plastic mast since "perfect trees" seem only to occur when no antenna outing is going on. We made the decision to make a mast using sections of Schedule-40 PVC.

See **Fig 2**, which shows the mast sections. You will find that this mast can serve to hold other antennas as well as being a Hentenna support. Of course, you could support your Hentenna using trees, eliminating the need for a mast. You could also use a metal mast below the loop of the Hentenna. Do not allow a conductive mast near or within the loop of the antenna, however.

I used 4-inch by 8-inch by ¼-inch thick pieces of acrylic as brackets to mount the elements to the mast. I found the acrylic sheet at a local hardware store. See **Fig 3**, which is a drawing of the acrylic brackets. The elements are attached to these brackets using #10-32 stainless machine screws, washers and nuts. This assembly is then attached to the mast using two ¼-20 stainless bolts, washers and wing nuts.

Fig 4 shows a close-up of an acrylic bracket mounted to both the mast and the C-C horizontal element. Note that the center ⅜-inch fiberglass rod that supports the two sides also acts as the center insulator for the matching section. I allowed a spacing between the left and right C-C matching section segments of about ⅛-inch. **Fig 5** is a photo showing the details.

I used stainless steel for all hardware. At the ends of the horizontal elements I drilled a clearance hole for a #10-32 machine screw ½-inch from each element end. This is to attach the #12 antenna wire (side H elements) using solder lugs to the upper and lower W sections. Refer to **Table 1** for lengths of wire sides and horizontal elements. Measure the required length of antenna wire and solder a lug at each end.

Attach these lugs to the #10-32 screws on the ends of the upper and lower horizontal elements using stainless nuts and washers. To attach the wire(s) to the matching section, slide the wire between two stainless washers on the #10-32 screw at the ends of the matching section and tighten the attachment nut.

This allows the matching section to be easily moved up and down for matching adjustments. Tape (another use for Duct Tape!) the matching section to the support mast while making adjustments and before drilling mounting holes in the support mast for this section.

Attach the coax feed line at points X-X, using a 1:1 current balun. Adjust the spacing (B in Fig 1) to achieve the lowest SWR. Our balun consisted simply of four ferrite beads clamped on the feed line at the feed point. The feed line and balun were held in place by tying them to the mast. During knockdown transport, the wire sides (H elements) can be wound on cans. For storage and transport, I keep the loose hardware in a small plastic jar.

If you leave your Hentenna in place for an extended period I strongly recommend the use of a good anti-corrosive lubricant such as Penetrox at each connection. Also apply a spray coating of a clear acrylic finish to all exposed surfaces, including the wire side elements.

Table 1

Dimensions (Refer to Fig 1)

Band	*Freq. MHz*	*W Inches*	*H Inches*	*A (Approx) Inches*	*B (Approx) Inches*
2 meters	146.0	13.5	40.5	27.0	13.5
6 meters	51.0	38.6	115.8	77.2	38.6
10 meters	28.25	69.7	209.0	139.3	69.7
12 meters	24.94	79.0	236.75	157.8	79.0

We built our Hentenna for horizontal polarization on the 12-meter band, but I also wanted to check the feasibility of the design for use on other bands. I've included in Table 1 the dimensions for other bands as well. These are based on using one-half inch horizontal elements and wire sides. Depending on the materials you use and your particular application you may need to adjust the dimensions a bit. You can also use my computer program (naturally enough, named *Hentenna.EXE*) available at: **http://www.arrl.org/notes/8608**.

Conclusion

I hope this gives you some ideas for your own Hentennas. My wife and I have since built other dipoles—some shortened—for the lower HF bands using the same construction techniques.

My initial guess about the limits of portability being the 12-meter band is probably a bit on the optimistic side. This is a *big* antenna for portability! Setup requires two people.

The performance we have enjoyed, however, falls in line with the many testimonials made for the Hentenna and makes it a worthwhile addition to our portable antenna farm.

Notes and References

[1] S. Kinoshita, "The Hentenna—The Japanese "Miracle" Wire Antenna," *The Antenna Compendium, Vol 5* (Newington: ARRL, 1996), pp 66-68.

[2] **http://member.nifty.ne.jp/tasaki/Hentenna.html**

[3] **http://www.ja6ybr.org/beacon/new/index.html**

[4] 19th Ed., *The ARRL Antenna Book* (Newington: ARRL, 2000), p 2-5. 2002 Ed., *The ARRL Handbook* (Newington: ARRL, 2002), p 20.2 for a discussion of the K factor.

A Hidden Loop Antenna

By Ted Phelps, W8TP
11 E Village Road
Newark, DE 19713

There's more than one way to skin a cat, at least when it comes to getting on the air despite zoning restrictions.

If you drive down my street in Whitechapel Village in Newark, DE, trying to find my ham location by looking for my antenna, you wouldn't find it. Even if you pulled up in front of my condo, you wouldn't notice any telltale signs, because my multiband antenna is completely hidden. It's in the attic of my two-bedroom condominium in a small retirement community completed in 1999.

This is a relatively new QTH for us. We moved from Columbus, OH, in August 1999 and thanks to my son-in-law, I was able to get back on the air quickly. In late summer 1998, at the urging of family members, my XYL and I surveyed possible retirement sites in eastern Pennsylvania, Delaware and Maryland. It was time for us to move east from Ohio, a distance of 450 miles away from our family.

Before the move, I had given considerable thought to what type of antenna I might use, if any. I already knew that permanent outdoor types were out of the question, due to restrictive real estate and condo association rules. So I planned a clause for any sales contract I might sign, specifically mentioning amateur radio and my desire to set up a station in my new living quarters. I decided I would not move where my lifelong hobby would be severely restricted or prohibited.

That meant that to be reasonably sure I could continue enjoying Amateur Radio as before, I would have to install an indoor antenna that could perform as well as a typical outdoor system. What kind? In Ohio, I had tried a horizontally polarized attic dipole made with #14 wire. It didn't work very well—it was just too low to the ground.

Antenna reference books warned of problems caused by locating an antenna too close to people, house wiring or building structures. I tried various other compromise antennas, using mock-ups made with my Hustler mobile whips, with the thought of arranging them for quick transfer outdoors or indoors to/from my new patio. They proved to be poor substitutes for the real thing, mainly because of difficulties making adequate ground/counterpoise arrangements.

During my move preparations, I visited a ham who had installed crossed horizontal dipoles in the attic roof of his condo. Again, I decided that kind of low-height design was too limited for the kind of hamming I wanted to continue.

Meantime, a ham friend in Seattle, WA, John Dudley, W7ITJ, wrote me while I was still in Ohio in detail about a loop he had designed for an amateur friend in his area. The system John designed was a square, single-turn loop, using #10 wire, 7 ½ feet per side, 30 feet in perimeter, in a horizontal plane. It was fed at a corner with 50-Ω coax and used a 150 pF tuning capacitor at the diagonally opposite corner. Ben Russell, N6SL, Mandeville, LA, net control on some regular CW schedules I keep, also sent helpful information about indoor loop antennas.

By now it was June, 1999 and we had decided to buy a retirement condo in Delaware, not far from where our older daughter and engineer son-in-law have lived for many years. But putting ham radio in our condo apartment was getting me into a whole new ballgame. I was facing unfamiliar environmental factors caused by having to go indoors with antenna design and construction.

I learned about a high-tech method of remote antenna tuning using an antenna coupler that contains a microprocessor. I found this kind of automatic tuner available from two American manufacturers and within a reasonable price range. Although our move was still a few months ahead, I purchased a model SG-230 antenna coupler made by SGC Inc, Bellevue, WA, for use in Delaware.

Since we had signed our condo agreement in June 1999, our son-in-law (who is not a radio amateur) began to build a loop using # 6 stranded wire, before we moved in. Armed with solid information from several antenna textbooks, he worked in the attic of our condo-in-construction and erected a delta loop antenna in a *vertical* plane. The triangular loop measured 65 feet in perimeter, with its apex 23 feet above ground and its base just off the attic floor, 12 feet above ground level. In August 1999, when I returned to the air from my new QTH in Newark, DE, I found my new custom-built shack all set up, a first-class operation.

My new loop and Smartuner worked very well, except that the SWR measured on 80 meters needed improvement. So after an initial operating period of a few weeks, we increased the antenna perimeter from 65 to 70 feet by changing the delta loop to a trapezoid. SWR for 80 meters improved. It now read 1.35:1 on 3555 kHz. Operation on other bands also was enhanced.

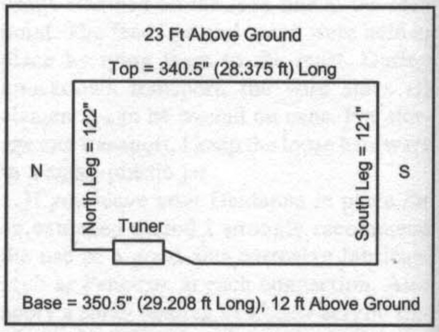

Fig 1—Diagram showing layout of W8TP's indoor hidden loop antenna.

In late February, 2001, I again modified my indoor loop antenna, this time to its present rectangular shape and perimeter length of 77.833 feet. This added almost eight feet and changed the ends to vertical segments. The modification made maximum use of available attic space and further improved SWR performance though the Smartuner. **Fig 1** shows the final dimensions of my loop.

Radio friends I contact regularly have told me that my signal from Delaware is as good or better than from Ohio, where I had used conventional outdoor antennas for over 20 years. It seems that my hidden loop is providing outdoor performance because of the efficient Smartuner in my attic.

Fig 2 shows my completed condo unit. Note the doghouse dormer on the roof about 12 feet above ground at the attic floor. This is the level of my hidden loop's base leg. I have a utility pole behind our building, just beyond our perimeter fence. The pole supports high-tension cables, which run along a North-South street. At first, we thought they would be a major source of line noise, but thankfully that has not developed.

Looking inside my attic at the north end, **Fig 3** shows the automatic antenna coupler on a separate floorboard. The north vertical leg of the loop antenna (122 inches long) begins at a standoff terminal seen at right of the plastic pipe on the left edge of the coupler. The loop terminates at a ground-return terminal at the upper right corner. The feed line from the tuner to the transceiver is Belden 9913 low-loss coaxial cable.

The photo in Fig 3 shows the coax and a 4-wire control cable on the attic floor leading away from the right side of the coupler. They run down to a dedicated metal outlet box behind the operating desk in the front bedroom of my combined radio shack, computer room and office. Power for my Smartuner is provided by a dedicated Lambda 12-V dc, 7.5 amp power supply that was found in a surplus sale.

My hidden loop antenna is a single-turn rectangular loop, erected in a north-south vertical plane and made from nearly 78 feet of # 6 stranded, aircraft primary wire in a PVC jacket, held taut at the lower corners and supported by a pulley and guy rope at each upper corner. Because it's vertically polarized, it supports low-angle radiation reasonably well.

All three versions of my indoor loop antenna have worked well from the beginning. Using a Smartuner made it much easier to construct, and I quickly learned to operate a vertical plane, multiband loop system, since I did not need to use separate parts such as capacitors, RF chokes, an impedance-matching transformer or tuning motors. With my system, the Smartuner network performs all tuning functions.

Fig 2—Can you see W8TP's antenna in this photograph? Of course you can't—it's hidden from view inside his attic!

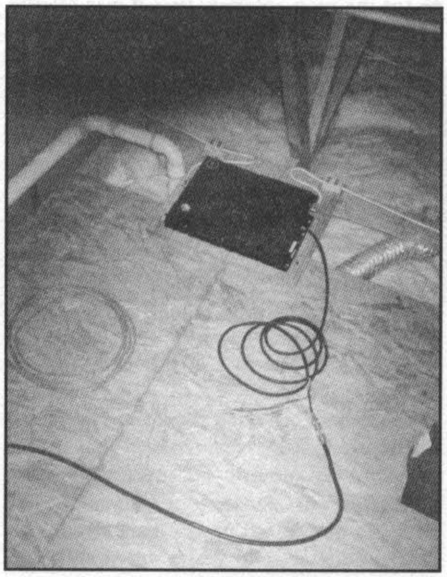

Fig 3—The SGC antenna tuner connected at a corner of W8TP's loop. The white wires at either end of the tuner are part of the vertical loop antenna, whose overall perimeter is about 78 feet long. The control cable and coax enter the tuner at its right-hand side.

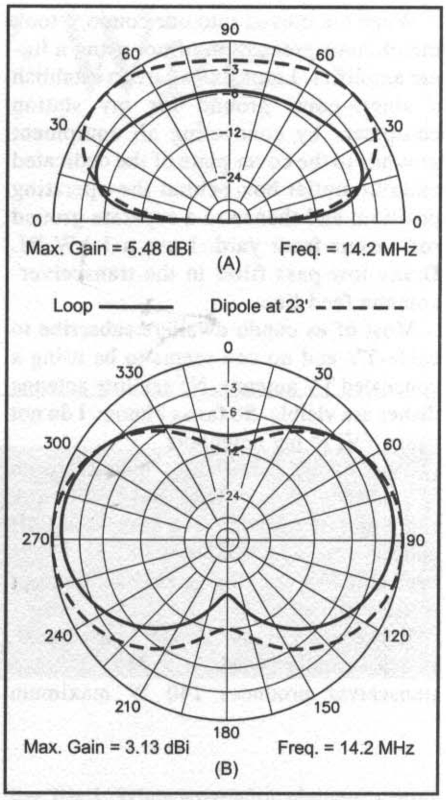

Fig 4—At A, computed elevation pattern at 14.2 MHz for W8TP's hidden loop (solid line), compared to a 20-meter dipole (dashed line) at a height of 23 feet. At B, a comparison of the azimuth patterns at a 20°-elevation angle for W8TP's loop (solid line) and the same 20-meter dipole (dashed line). The loop has a slightly asymmetrical response because it is fed at a corner, but its performance is competitive to an outdoor dipole. In fact, it has superior low-angle performance, typical of a vertically polarized antenna compared to a low horizontal antenna.

Please note this cautionary word: Selecting an initial frequency or changing to a different one should always be done at *low power.* The first time a given antenna-transmitter frequency combination is tried, its unique characteristics are entered into non-volatile memory of the coupler, which can store up to 170 tuning solutions. On very rare occasions, the antenna coupler may not immediately tune at the selected frequency and a slightly longer than normal time interval may be required to complete tuning. For these rare situations, if SWR rises to over 3:1, your radio power supply should shut down your transceiver if it is equipped with a safety foldback SWR cutoff circuit.

When the coupler encounters the same frequency again, tuning is completed within 20 milliseconds by recalling information from the non-volatile memory. To tell me when my loop is properly tuned, I have a red LED mounted in a small panel above my operating position. When tuning is completed, the LED lights, "Loop Antenna Ready."

In constructing my system, however, I had to overcome RFI problems on my own premises. Each condo unit has its own electronic security panel on an upper shelf in a closet. As soon as I applied moderate power to my radio and loop, the Fire Alarm sounded and firefighters came to my door! The burglar/intrusion signal was triggered a couple of times, too. Working with a security installation technician, I found that *there was no ground wire connected to my security panel.* "We don't bother with that," said the tech, and then, reacting to my surprise, connected a #14 ground between the security panel and the house water-pipe ground. I then installed a ferrite bead on each lead entering the security panel. I also placed ferrite beads on keyer-paddle leads, GFCI electrical outlets, etc. Those measures seem to have eliminated my RFI problems.

When we moved into our condo, I took the obvious precaution of not using a linear amplifier. I took extra care to establish a single-point ground for my station equipment by connecting all equipment grounds to the cover plate of the dedicated metallic outlet box behind the operating position, and thence to a separate ground rod in our front yard. I use a 1 kW RL Drake low-pass filter in the transceiver-antenna feed line.

Most of us condo dwellers subscribe to cable-TV and no one seems to be using a concealed TV antenna. No satellite antenna dishes are visible. So far as I know, I do not cause TVI to my neighbors.

Most of my ham-radio contacts are on CW and I work both USA and DX. I work some morning round-table groups on SSB and have had a few QSOs by PSK31. I have been able to work all amateur bands except 6 and 160 meters.

It's accurate to say "If I can hear a signal, I can usually work it." My JST-245 transceiver produces 140 W maximum forward power on all amateur bands to the Smartuner and rectangular loop. SWR is measured with a cross-needle meter always in the circuit and typically is less than 2:1.

Is this indoor antenna system safe? I believe so. In the attic it is not at all close to our living space. It is fixed firmly in place and unlike most amateur antennas it is *out of the weather*! I therefore do not use a quick-grounding system for times when a thunderstorm approaches.

By the way, if you're wondering why I used such a relatively large-gauge wire as #6 for the loop antenna, first it was readily available. My son-in law had a large enough quantity on hand that I could use without purchasing more.

Second, #6 insulated wire provides greater antenna efficiency with its 0.2-inch diameter, compared to more commonly used #12 or #14. W7ITJ used #10 wire for his demonstration loop I had considered using ¾ inch copper pipe, a conductor also mentioned by W7ITJ. But copper tubing is too unwieldy to take up a ladder and I considered it unsafe to handle in the attic. I didn't want to take chances of maybe putting a foot through my living room ceiling, so I decided to stay with #6!

In order to gain some objective information about my concealed loop, I turned to Fred Griffee, N4FG, Annandale, VA. After we exchanged a few e-mail messages, Fred very kindly stepped forward and made a thorough analysis of my loop and Smartuner using *EZNEC 3.0* as a modeling tool.

This computer program found some extremely interesting results. **Fig 4** shows the computed elevation and azimuth patterns on 20 meters. The tuner is able to hold the SWR down low enough so that my JRC-245 transceiver can operate through its internal antenna tuner.

Conclusion

Is this a killer antenna that lets me crash through massive pileups with a single call? No, but it is enough of an antenna to let me enjoy my hobby—and the neighbors don't even know I have an antenna!

A 3-Element "Ninja" Wire Beam

By Patrick Wong, VE3RGW
115 Silver Rose Crescent
Markham, Ontario
L6C1W8, Canada

VE3RGW describes his high-efficiency wire beam—used inside his attic.

I wanted a "Ninja" stealth antenna—a system totally hidden inside my attic. I had been using outdoor vertical antennas for many years. While omnidirectional antennas have a place in radio, if you are looking for more reliable contacts you must go directional. I wanted a stealth beam for 20 and 15 meters, with coverage on 10 meters as well.

You can reduce the size of an antenna using coils and traps but that always costs you something in efficiency and often the reduction in operating bandwidth becomes a serious compromise. So I decided on using full-sized elements. My attic provides me a total area of 30×40 feet, with a maximum inside height of 12 feet. This includes a small area of 15×8 feet where I can stand up freely. This space is sufficient for a single full-sized 3-element 20-meter Yagi. The problem is that it cannot be rotated in such a space.

"Rotating" a Wire Beam

My first attic beam started in early 1998. It was a modified 2-element system originating from a design by VE3CYC.[1] I used it for two years and was very pleased with the performance. In brief, this antenna system contains two identical coax-fed triband dipoles, spaced 10-feet apart. The beam was steered by feeding one coax, with the other coax open-circuited. This acted as a tuning capacitor and turned the non-fed dipole into a director. However, I wanted a little more gain and a better pattern than a 2-element Yagi could provide.

A conventional 3-element Yagi consists of a driven element and two parasitic elements (director and reflector). The reflector is made resonant on a frequency lower than the driven element, while the director resonates at a higher frequency. The only way I could conceive of steering a wire 3-element beam is to use LC components at the center of both parasitic elements to tune them either as a director or as a reflector.

Compared to a conventional beam there is one more limitation in my case—the distance between both parasitic elements and the driven element must be equal, since both sides take turns as director or reflector. Based on past experience, the closer the director/reflector is to the driven element, the greater the effect of parasitic element tuning has on the feed-point impedance.

Modeling and Parameter Setting

I originally intended to build my new indoor Yagi for DX contacts coming mostly from the east and west directions. Since the azimuth of this antenna can only be flipped but not rotated, the beam should have good F/B ratio but a wide forward beam angle. That helps to pick up stations coming from the sides, together with affording suppression of interference from the back.

With the aid of *NECWIN95*, I drafted a plan with a single triband driven element in the center and two relay-tuned parasitic elements on either side for 20/15 meters. See **Fig 1**. When a parasitic element's relay contact is closed, the element is short circuited to make it into a director. When the contact is open, an inductor is inserted in series with the parasitic element to make it into a reflector. The relay contacts on both parasitic elements must work so that when one side is shorted, the other side will be open to include the additional loading inductor. By controlling the relay contacts remotely, I would have a 3-element Yagi that could be flipped 180°.

Computer simulations with different conditions ended up with the following combination. The boom length is 10 feet, with fixed element spacings of 5 feet each side of the driven element. This is a compromise to save two relay boxes by using paralleled parasitic elements for 20 and 15 meters. I set the element self-resonant frequencies at 13.7/14.1/14.9 MHz and 20.5/21.2/21.9 MHz (reflector/driven ele-

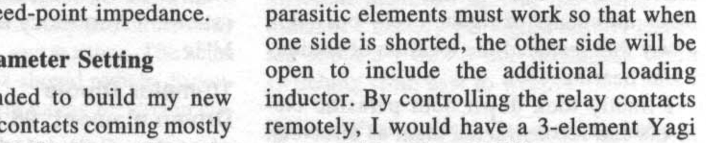

Fig 1—Layout of the VE3RGW in-attic wire Yagi. Each parasitic element can be tuned using relays as a director or reflector to switch the direction of the array.

ment/director). Each self-resonant frequency was determined in the computer model by deleting all other wires while feeding each element as a dipole.

Forward gain for such an array varies between 9 to 11 dBi, with a F/B ratio of 10 to 20 dB maximum. SWR is quite flat throughout the frequency range in both bands (well under 1:1.8 at the minimum). These gain and F/B ratio figures are computed at a takeoff angle of 32° on 14.2 MHz with the apex of the antenna 30 feet above average ground. The 3-dB beamwidth is 70°, or ±35° on each side of the centerline.

In theory, the load at the center of each parasitic element could be a capacitor to turn a reflector into a director or it could be an inductor that turns a director into a reflector. In fact, I first planned on making my parasitic elements as reflectors. I planned using variable capacitors to create directors. My assumption was that variable capacitors could be adjusted easily to help out while tuning the system. My reflectors would be optimized for resonance on 13.8 MHz and 20.5 MHz for 20 and 15-meter operation respectively. Insertion of a 60 to 90-pF capacitor would change the resonance points to 14.9 MHz and 21.9 MHz respectively.

Unfortunately, such a mechanism didn't work for me for some reason, probably stray capacitances. After I tuned up both reflectors of my first prototype, I didn't see the expected effect when I switched directions. There was a drastic change of SWR and a moderate change of signal level—but not in a way that matched the location of stations I was hearing.

I finally took down both parasitic elements and reconstructed them as directors. It took me another three evenings to tune 20-meter reflectors properly, using a 1-µH choke in place of the variable capacitor. The results turned out to be much better. SWR falls right into the predicted region (1.5:1 between 14.1 to 14.25 MHz) and there is quite a difference when flipping directions. Encouraged that I was on the right track, I performed more fine-tuning for both 20 and 15 meters.

During initial simulations, a single inductor ranging from 1.2 to 1.5 µH was the best compromise for both bands. On 20 meters, 1.5 µH yields a low SWR on average, while 1.2 µH has the highest F/B ratio (but needed additional matching for low SWR). For 15 meters, 1.2 µH seemed to be best for a low SWR, but the F/B was best with values about 1.5 µH. For simplicity, I chose to optimize 20 more than 15 meters, using 1.5 µH loading coils. Fortunately, performance on 15 meters is not bad as well.

Some Details

As seen in **Fig 2**, the antenna consists of three similar multiband dipoles. The higher frequency wires are parallel to and suspended below the 20-meter wire using plastic insulating spacers. The individual dipole wires are spaced 4 inches from each other and the spacers are screwed to the roof joists, shown in **Fig 3**. I made my spacers from 12-inch long 1×1-inch wood strips.

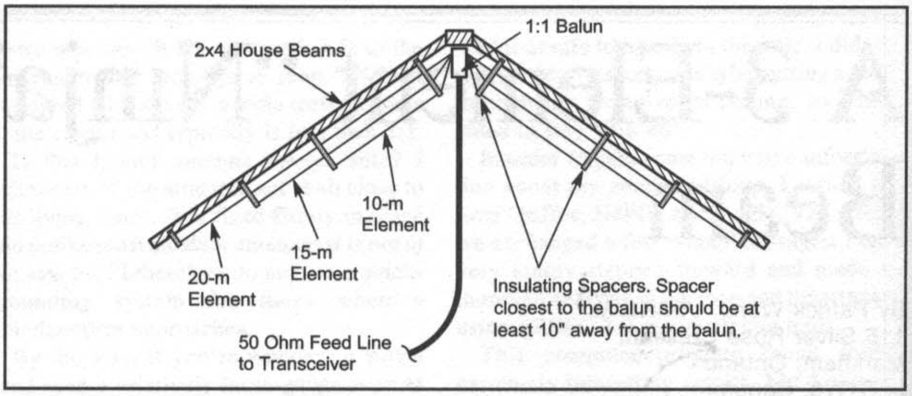

Fig 2—Layout of the 20/15/10-meter driven element using insulating spacers to separate the three wire dipoles.

Table 1

20-meter Yagi
Driven element: 202 inches each side of center. Calculated self-resonant frequency: 14.1 MHz.
Parasitic elements: 193 inches each side of center. Calculated self-resonant frequency as director: 14.9 MHz.

15-meter Yagi
Driven element: 136 inches each side of center. Calculated self-resonant frequency: 21.2 MHz.
Parasitic elements: 132 inches each side of center. Calculated self-resonant frequency as director: 21.7 MHz.

10-meter Dipole
Driven element: 96 inches each side of center. Calculated self-resonant frequency: 28.5 MHz.

Table 1 gives the calculated lengths of indoor wire elements, assuming that you use insulated #14 stranded household wire. The system is mounted at an apex height of 30 feet in the attic in an inverted-V configuration, with a –35° angle from horizontal. You can expect some variation in lengths depending on your exact situation, including the effect of other conductors in your attic, so the self-resonant frequency of each element by itself is shown.

The 20/15-meter parasitic element wires are connected in parallel at relay boxes that switch in 1.5-µH loading inductors to turn the elements into reflectors. See **Fig 4**. I built my relay boxes from 2×3×1-inch plastic project boxes, with two 6-V relays from my junk box in series.

I wound my loading inductors on the bodies of ½-W 10-MΩ carbon film resistors, which made convenient coil forms. I used 30 turns of #30 enameled wire, wound in two layers of 15 turns each, checking the inductance with an MFJ-259B antenna analyzer.

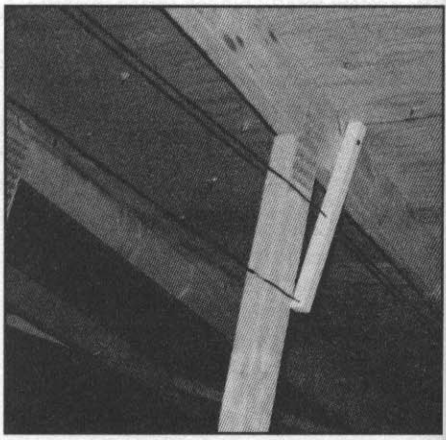

Fig 3—Photograph of the spreaders on one of the parasitic elements.

Tuning

As I said before, other conductors in your attic may detune your elements. Here is a procedure to tune individual wires in-place in your own attic, using an antenna analyzer such as the MFJ-259B.

Start with the driven element on 20 meters. Disconnect all the other driven-element wires for the higher bands *and* all the wires for the parasitic elements at the two relay boxes. Measure the SWR over the whole 20-meter band. The SWR is unlikely to go down to 1:1, but it should go to some minimum level—which will occur at the resonant point. Hopefully that will be at 14.1 MHz and you won't have to tweak anything, but that's unlikely! If the lowest

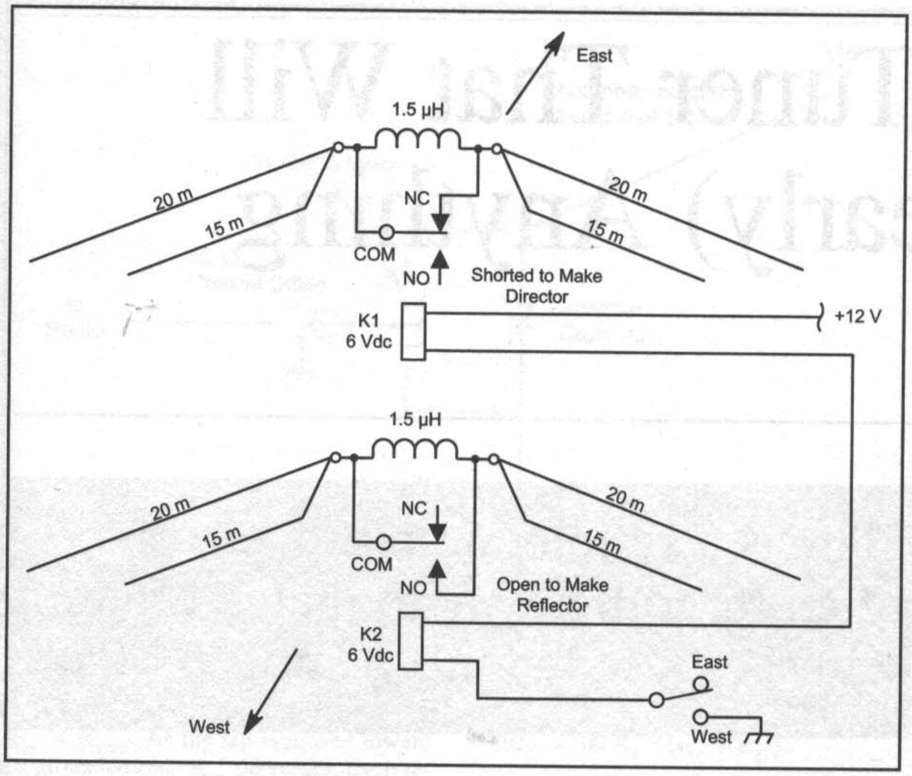

Fig 4—Schematic of the switching system for turning a director into a reflector.

SWR occurs at a low frequency in the band, the antenna is too long, or it is too short if the SWR is better on the high end.

By cutting or adding small length of wires from/to the driven element, tune the 20-meter element, always making equal changes on both sides of the dipole. After the 20-meter element is tuned to 14.1 MHz, reconnect the driven-element wires for 15-meter band and apply the same procedure to trim it to 21.2 MHz. The tuning of the 15-meter element should only affect the 20-meter element minimally. Then connect and tweak the 10-meter driven-element wires for 28.5 MHz.

Now, you must tune the parasitic elements, one at a time. Again, this must be without the influence of any other Yagi wires. Disconnect the 20/15/10-meter driven elements and move the balun and feed coax in place of the relay box to each parasitic, one at a time. The wires at the other relay box should remain disconnected, as they were in tuning the driven element wires.

By the way, it's a good idea to scan a wider range than expected, because there can be multiple resonance spots due to nearby conductors. In my case, my 20-meter directors showed two resonances—the best dip was at 14.9 MHz at SWR 1.1:1 and a second dip at 13.2 MHz showed an SWR of 1.8:1. If I had focused on the lower resonance I would have hopelessly confused matters. In my case influences inside the attic made the final length of one 20-meter parasitic 2 inches longer than its partner on the other side. Once you get the first 20-meter director to resonate at 14.9 MHz, connect the 15-meter director and tune it for 21.7 MHz.

Now, disconnect the wires to the parasitic element you have just tuned and move the balun and feed line to the other parasitic element. Tune it for first on 20 meters and then on 15 meters. Again, make sure that you have left both the driven element and the other parasitic disconnected.

Finally, connect everything back together again and test the antenna for pattern and SWR across the bands. Everything should work fine with a 1.5 µH loading coil inside each parasitic element's relay box and the SWR should be close to the same in either direction.

Test Results

After two weeks of hot-sauna conditions working in my attic, I finally had the beam ready for test. My first impression as I hooked it up to my radio was: "This has a much quieter noise floor then my old 2-element beam." I scanned around the 20-meter band and called a Spanish station that was 10 dB over S9 with the beam pointed east.

He came back to me and any doubts I had disappeared immediately! When I flipped the switch to the west, his signal went down to S2, while my signal went to S4 from S9 + 10 dB. In the following weeks, I continued to check the performance for stations in different locations around the world. On transmit I usually get signal reports showing about a 1 to 3 S-unit difference when switching from east to west.

Special Precautions Concerning Attic HF Antennas

For radiators in your attic, you should make very sure that nothing arcs. You don't want a fire up there! I mostly limit my power to 100 W and I haven't had an problems with my attic antennas for over 5 years. At this power level, the computed field intensities are within limits specified for electromagnetic safety.

Notes and References

[1] *73 Amateur Radio Today*, Jun 1992 issue.

A Simple Tuner That Will Match (Nearly) Anything

By Stan Gibilisco, W1GV
PO Box 824
Chippewa Falls, WI 54729
www.sciencewriter.net

Here is a simple, time-proven, but often-forgotten way to match random wires, especially on 1.8 and 3.5 MHz.

End-fed wire antennas are convenient, but they present challenges. Most need a low-loss ground to operate efficiently. They must be at least $^{1}/_{8}\ \lambda$ long. A random wire should be high enough above ground to put one or more current loops where it can radiate unencumbered. An antenna tuner, sometimes called a Transmatch, is almost always necessary to match such a wire to the output impedance of a ham transmitter. The length must be "tweaked" if the tuner can't provide a perfect match between the wire and the transmitter.

When a wire happens to measure a multiple of $^{1}/_{2}\ \lambda$ electrically at the operating frequency, commercially manufactured tuners often have trouble. The radiation resistance is too high for most tuners to deal with, even if there is no reactance at the feed point. But these lengths are, in terms of obtainable efficiency, the best.

The Need

One night during the long Northern winter of 1987-1988, I had the good fortune to live at a QTH where there was plenty of real estate. For at least 500 feet (300 m) to the north and west of the shack lay an expanse of wilderness not yet spoiled by home building or utility lines. I ran a long-wire antenna, consisting of #8 aluminum ground wire, from the window of the shack out through the tops of distant trees. That wire was almost perfectly straight and horizontal. True to theory, it produced gain in its major lobes, especially at 14 MHz and above. It also stretched and sagged. Soft-drawn aluminum is not a good choice for long spans of wire. I kept pulling it tighter and tighter until it broke. Then I put up some stuff called "Baygard 6," stranded aluminum wire interwoven with tough plastic that resists stretching and breakage, is light in weight and is easy to handle. Farmers use it for electric fencing. I'm convinced its inventor was a radio ham.

In the winters at Northern latitudes, "low band" (meaning HF) hams' minds turn toward 1.8 and 3.5 MHz. I began to wonder what would happen if I attached a helium balloon to a $^{5}/_{8}$-λ or $^{1}/_{2}$-λ wire on either of those bands. I went to a local welding store, got a helium-filled balloon measuring 4 feet (1.2 m) in diameter when fully inflated, and attached some Baygard 6 securely to it. On 3.5 MHz, I worked five South American and European stations within the first few minutes on the first evening, running 80 W output on CW. I had never before heard 80 meters sound like that. It was like 20 meters on a spring day, but less crowded. I tried longer lengths of wire, up to 1.5 λ at 3.525 MHz. That's about 400 feet (250 m). Even when the wind made the balloon heel over and fly at a 45° angle, the top of that antenna was up high!

It can be dangerous to use balloons or kites as antenna supports. The wire can break loose, and then you will pray that it does not come down where it will hurt somebody or damage property. It might fall on a utility line, causing power outages, fires or human electrocution. When the temperature is above freezing, huge static charges build up, even on clear days and nights. This causes sparks that jump several centimeters and can wreak havoc with radios. If you get nailed by one of these (I have), you'll know it!

Such antennas must be tethered independently using kite line or nylon string with sufficient breaking strength so a gust of wind can't tear anything loose. Don't fly such a wire where there is any chance of it falling on a power line or coming down where cars and trucks might run over it and get tangled up in it. Never leave such an antenna unattended. And if you can see lightning or hear thunder, don't even think about sending a wire up with a balloon or kite or captive model airplane or any other flying device.

The antenna tuner I was using, an MFJ kilowatt model with a nifty crossed-needle meter, did its job admirably, matching the wire at all lengths except those right around exact multiples of $^{1}/_{2}\ \lambda$—the lengths I wanted. How does the saying go? "I have everything except the thing I want the most..." Well, it doesn't have to be that way. I turned that lament inside out in a couple of hours, at least with respect to getting RF into a piece of wire.

The Thought

The design of a tuner to match wires measuring exact integral (whole-number) multiples of $^{1}/_{2}\ \lambda$ is, in theory, simple. If a tapped roller inductor and a variable capacitor are connected in parallel and tuned to resonance, the antenna can be connected to one end of the combination, the other end can be grounded, and the tap can be connected to 50-Ω coaxial cable going to the radio (See **Fig 1.**). Once resonance is obtained by adjusting the capacitance (not the inductance), the result is a continuously variable resistance transformer that can transform the high, purely resistive impedance of the wire (call it R_{wire}) to any resistive input impedance R_{in} such that $R_{in} \leq R_{wire}$. This adjustment is done by turning the roller inductor. When the tap is at

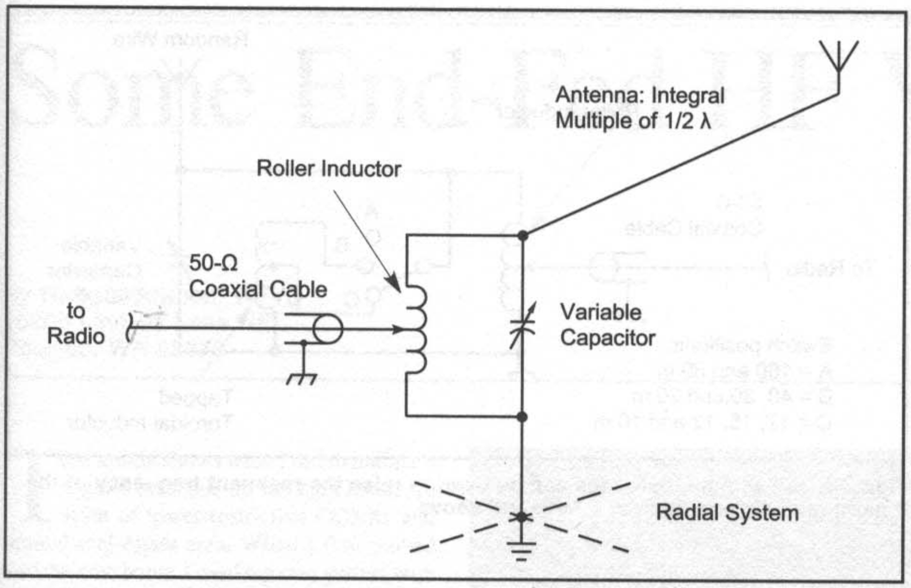

Fig 1—This is the way to build a tuner that will match an end-fed wire that is a multiple of ½ λ.

the wire end of the coil, then in theory, $R_{in} = R_{wire}$. As the tap is moved toward the grounded end, R_{in} decreases, but it remains purely resistive all the way. By the time the tap reaches the grounded end of the coil, $R_{in} = 0$.

In practice, end-fed wires, measuring exact multiples of ½ λ and attached to balloons or kites, have extremely high radiation resistance (R_r). The exact value of R_r is difficult to measure and can vary from place to place depending on the nature of the terrain, the conductivity of the earth in the vicinity, whether or not the trees are leafed out, and even whether the relative humidity is high or low. Typical values range from $R_r = 600\ \Omega$ to $R_r = 3000\ \Omega$ or more. Fortunately, it is not necessary to know the exact value of R_r. But it's always high enough so that the installation of a modest ground system will allow for high antenna efficiency. Remember the old formula:

$$\text{Eff}_{\%} = 100\ R_r \ / \left(R_r + R_g\right)$$

where Eff% is the efficiency in percent, and R_g is the total loss resistance in the RF ground system, the antenna tuner and surrounding objects.

I'm a hard-liner when it comes to antennas for 1.8 and 3.5 MHz. I believe the secret to a good antenna on those bands lies in "damage control" (minimizing RF loss), and not in "greed" (going after high gain). If you get 3 dB of gain but have an antenna that is only 25% efficient, you're losing the game.

Consider an example of a bad RF ground system where $R_g = 200\ \Omega$. If $R_r = 2000\ \Omega$, a typical value for a balloon-supported, end-fed, ½-λ wire, the efficiency is excellent:

$$\begin{aligned}\text{Eff}_{\%} &= 100\ R_r \ / \left(R_r + R_g\right)\\ &= \left(100 \times 2000\right) / \left(2000 + 200\right)\\ &= 90.9\%\end{aligned}$$

A couple of quarter-wave radials and a ground rod can provide a 200-Ω RF ground in any location, even in the middle of the desert. Armed with this knowledge, I proceeded to modify the MFJ tuner to serve as a specialized, high-R_r tuner for 1.8 and 3.5 MHz.

The Deed

Be warned: Rewiring a commercially manufactured antenna tuner will void the warranty. I went ahead and did it anyway. I knew that if I ruined the thing, it would be my own fault, but I also figured it would be hard to destroy a network of coils and capacitors with only 80 W.

I won't provide specific wiring instructions concerning the modification of the MFJ tuner, for a couple of reasons. First, it's been several years since I did this, and I don't have the tuner anymore. Second, every tuner is wired a little differently, and specific instructions for one tuner will be useless or misleading for others. In general, the process goes like this:

- Remove all wiring inside the tuner. That is, completely isolate all the internal components.
- Connect the non-grounded (usually the stator) plate sets of the two variable capacitors together.
- Be sure both of the normally grounded (usually the rotor) plate sets of the two variable capacitors are grounded to the chassis.
- Connect one end of the roller inductor to the chassis. If one end is already hard-wired to the chassis, leave it that way.
- Wire the other end of the roller inductor to the unbalanced antenna output connector. If there is no unbalanced antenna output connector, wire it to one of the balanced antenna connectors.
- Wire the tap (roller) of the inductor to the transmitter input connector.
- Be sure neither the toroidal balun nor the band switch (if the tuner has either or both of these) is wired into the new circuit in any way.

You should now have a circuit like that of Fig 1. The variable capacitor will consist of two separate variable capacitors in parallel. This will give you about 200 pF maximum capacitance. You'll need it all to resonate the circuit on 1.8 MHz.

The Results

The modified MFJ tuner worked well for end-fed wires measuring multiples of ½ λ on the 1.8- and 3.5-MHz bands. The lower end of 160 meters required that both capacitors be fully meshed, but a 1:1 SWR was attained for all the antennas I tried. None of the internal components got hot. I made a lot of contacts and got a lot of good signal reports.

Curiosity never killed or seriously injured this radio ham (although it has cost me some equipment downtime), so I tried this tuner with antennas not measuring multiples of ½ λ. Interestingly, the circuit tuned any antenna I tried, no matter what its length, on the "top two bands." This was true even for short lengths of wire, and for wires measuring odd multiples of ¼ λ. In fact, using low power, I seems that I could tune a piece of wet spaghetti—or no load at all. The adjustments for the spaghetti and the "nontenna" were critical, indicating that the tuner was giving the job of tuning up into its own internal losses a good try.

There are at least two precautions that should be taken when using a tuner that deals with antenna systems having very high impedances. The high RF voltage can cause trouble in at least two ways.

Caveat No. 1: Even at modest power levels, the voltage across the capacitors and the feedthrough insulator can be extreme. I do not recommend running more than 200 W of RF power into a modified "kilowatt" tuner, or 50 W into a modified "200 W" tuner. If you're one of those QRO folks who likes to run the legal power limit, I suggest you go to the flea markets and find the most un-flea-like components you can get your hands on. This is especially true of the variable capacitor(s). You will need at least 200 pF with the widest possible plate spacing. Money should be no object. Build the circuit of Fig 1 inside a shielded enclosure with plenty of "headroom." Otherwise, arcing is almost certain to occur.

Caveat No. 2: With an end-fed antenna measuring a multiple of $^1/_2\ \lambda$, the feed point is at a current node (voltage maximum). That pesky high RF voltage appears right in the shack, or, if you put the tuner outside, at ground level. If anyone touches the wire or the feedthrough insulator while you're transmitting, he is going to get burned. At high power levels, these burns can be serious. You must be sure no one gets hurt in your quest for efficiency, unless you like being a defendant in a lawsuit. Also, if the antenna wire passes through a window to get outside, it must not be allowed to come close to anything metallic, such as a screen or an aluminum window frame.

The Higher Bands

When I modified the MFJ tuner to serve as a high-impedance, random-wire tuner for 1.8 and 3.5 MHz, one of the unfortunate side effects was that it no longer performed well on the bands above 7 MHz. In some cases I could tune antennas on 40 meters, but the capacitors had to be near the fully unmeshed points. That's not the best state of affairs for any tuned circuit.

A fixed or tapped inductor can be connected in parallel with the roller inductor to reduce the inductance in the tuned circuit, thereby allowing the tuner to work on the HF bands at 7 MHz and above. This fixed or tapped coil does not have to be a roller inductor, nor does it have to be an air-core type. A heavy-duty toroidal inductor will work. I have not built a tuner using this design, because my interest in hamming is inversely proportional to the cube of the operating frequency. I can't give you specific component values. I suggest a large powdered-iron toroidal inductor from Palomar Engineers or similar vendor. Use #14 or #12 soft-drawn, insulated copper wire for the windings. You'll have to find two or three tap points by trial-and-error, and connect these through a heavy-duty, single-pole, multiple-throw switch. The basic scheme is diagrammed in **Fig 2**.

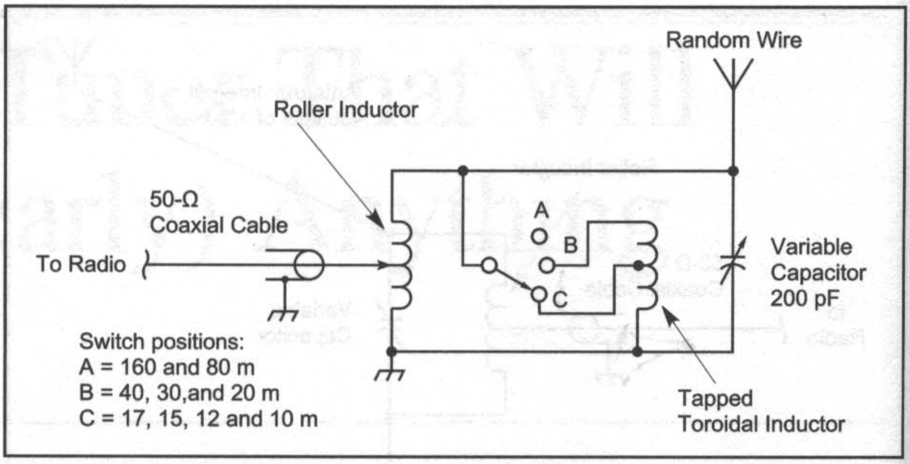

Fig 2—A coil with multiple taps can be used to raise the resonant frequency of the tuner and allow operation at 7 MHz and above.

While some antenna tuners, such as this one, can "match anything," the importance of a good antenna radiator cannot be overstressed. An antenna system is only as effective as its worst part will allow. You might be able to force some RF into a light bulb or a coat hanger with a circuit like this, but you'll get the best results, as always, when the antenna itself is built with the idea that it should radiate the power it receives into the airwaves!

Some End-Fed HF Verticals

By Richard Atwood, W7VS
15900 Lindsey Lane NE
Poulsbo, WA 98370

W7VS examines the basic J-Pole in some new territory—He uses parallel-resonant LC circuits to match to the coax feed line.

This article shows what I did to maintain a good presence on the ham bands, in spite of tower-restrictive CC&Rs and limited real-estate area. When I first moved into the new house I used my rain gutters with a special tuner. This antenna was adequate on 160 and 75/80 meters, but was pretty sad on the higher frequency bands.

With the acquisition of a kilowatt amplifier the rain-gutter antenna had to go. There was not only the health danger of an antenna pumping out lots of RF within a couple feet of my head, but the possibility of setting fire to the house really meant I did have to do something else. I'm fortunate that my side and rear yards have a number of 100-foot tall fir trees, so my thoughts turned to stealthy wires for those trees.

THE J-POLE ANTENNA

Many of you who have used a VHF/UHF J-pole may not be aware that the principles behind it are directly applicable to the lower frequency bands. The fundamental principal is that of a ½-λ conductor that presents a high impedance at the bottom (thousands of ohms). This requires some provision for matching from this high impedance down to the 50-Ω coax that goes to the shack. The J-pole does this by feeding the conductor with a ¼-λ open-wire transmission-line stub, often made using ladder line, with the feed coax cable tapped in at some length from the shorted lower end. See **Fig 1**.

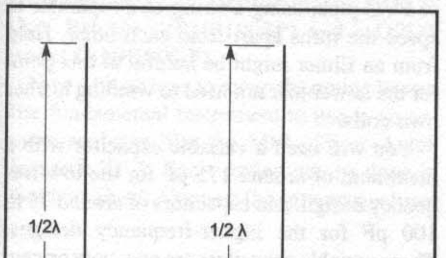

Fig 1—Evolution of J-Pole to LC-parallel matching circuit.

In essence, this article demonstrates the evolution from an open-wire ladder-line stub to a parallel-tuned circuit for the lower-frequency ham bands. Note that the basic form is similar to a *Zepp antenna*, again a ¼-λ transmission line feeding a ½ or 1-λ wire. This antenna was popular in the 1920s and 1930s and is mentioned in *The ARRL Antenna Book*.

My antenna farm now consists of a collection of ½-λ wires plus a ¼ wave on 160 meters using the wire common to 75/40 meters. Some advantages of the end-fed wires are:

- No radials are required, since they are voltage fed and current return from the radiator is not a problem.
- The ½-λ wire can be used on both even and odd harmonics, while a dipole without traps or multiple wires can be used only on odd harmonics.
- The end-feed structure is generally easier to erect, while complying with my CC&R-related minimum visibility requirements. A long wire for the lower frequencies can be hung under the eves or along a pitched roof length. It can be set up as an inverted "V" or a flattop, but doesn't have the center feed line required for a center-fed dipole.
- As a vertical, a ½-λ antenna has substantial gain over a ¼-λ vertical and also has a lower angle of radiation.

Each of my three antennas has its own control box, a standard RadioShack 8×6×3-inch plastic box with a plastic cover. The idea is to connect each ½-λ wire to an parallel-resonant LC circuit tuned to the frequency desired. Each parallel LC circuit has a tap on the coil that gives a good match to the coaxial cable.

My lowest-frequency antenna is a wire 130 feet long, serving as a ½-λ on 75-80 meters and a 1-λ full-wave on 40 meters. This same wire serves as half of a dipole on 160 meters when used with a counterpoise or a good ground system. This antenna is nearly horizontal at about 35 feet and serves for NVIS on the three lower bands. **Fig 2**, shows how the optimum length was chosen, relative to the three bands based on the formula: Length (feet) = 468/Freq (MHz).

The tuning box for the 130-foot antenna became somewhat complicated due to the requirement to switch the wire away from the LC circuit for 160-meter ¼-λ use. An additional requirement was to split the 75 to 80 meter band into three sections to maintain a maximum SWR of 2 to 2.5 on any subsection. I used relays to do all the switching. See the schematic in **Fig 3**.

The higher-frequency antennas, 20 down through 10 meters, employ two sets of verticals. These make use of tree branches or the eaves of the house for upper support. One set supported at a height of 35 feet covers the 20 and 17-meter bands. It consists of two wires,

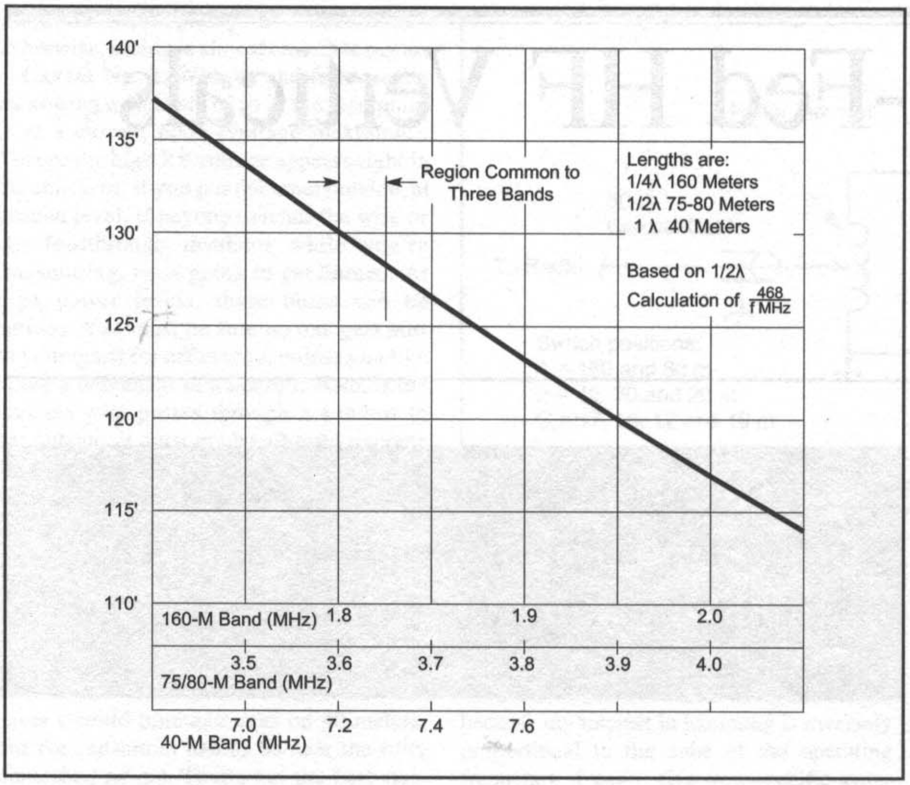

Fig 2—Length vs frequency band.

one 33 feet and the other 25.5 feet long. For coverage of 15, 12 and 10 meters, I use a second set of wires at a height of 27 feet. These wires are 25.5, 18.8, and 16.3 feet long respectively. The wires in each set may be adjacent to each other with no ill effects.

The schematic is shown for the 15 to 10-meter box is shown in **Fig 4**. Note that a single 50-Ω tap was used for the three bands. The design for the 20 and 17-meter box, while similar, required separate relay-switched taps to achieve a SWR of 1.2 or better.

In order to use these antennas efficiently, I purchased an Ameritron remote-switching box mounted outside the house, from which a single coax goes into the house. I use an additional control box in the shack to select the particular relay for the band or frequency range desired on the active set, using multiconductor telephone cable. I won't go into the details of the switching covered here.

For materials, you'll need the RadioShack plastic boxes and coil material to make an inductor of around 10-11 µH for the 160/80/75-meter antenna, and around 2-3 µH for both higher-frequency designs.

You might use Millen coil stock number 2004T from Surplus Sales of Nebraska. The coil is 10 inches long and 2.5 inches in diameter, with a pitch of 4 turns per inch, for a total inductance of 23 µH. It's a bit pricey, but easy to work with, and has enough material for all the coils desired (about 5 inches for the 10 µH coil and 1.5 to 2 inches for the two higher-frequency coils. The alternative is copper tubing or even #14 to #12 wire at a few cents per foot. You could wind this bare wire on a piece of PVC pipe, using a string as a separator to space the turns apart from each other. Help from an Elmer might be helpful at this point for the newcomer not used to winding his/her own coils.

You will need a variable capacitor with a maximum of around 175 pF for the low-frequency design, and capacitors of around 75 to 100 pF for the higher-frequency designs. These variable capacitors are now very pricey. I strongly suggest you look around at hamfests—there are usually many to choose from. Get some help beforehand from your Elmer to get an idea of what exactly to look for.

For a 100-W power limit, a few thousands inch of plate separation is sufficient. At the 100-W level, I have found that I could use husky compression trimmers in parallel across variable capacitors that didn't have a large-

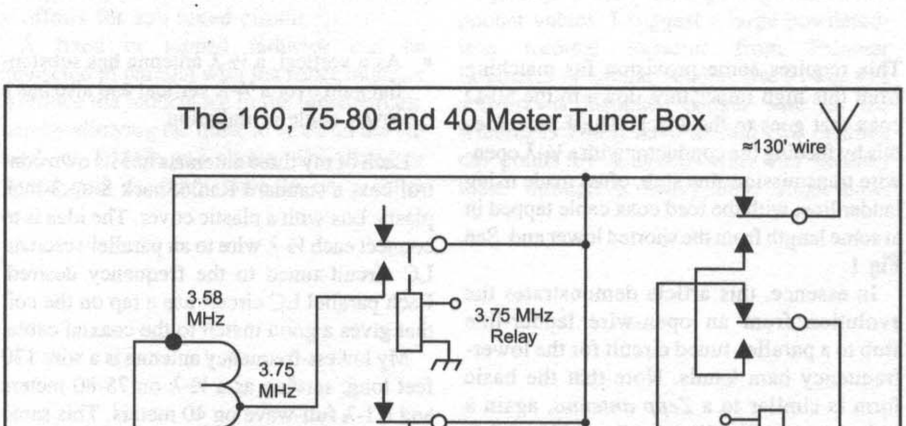
The 160, 75-80 and 40 Meter Tuner Box

Each relay is controlled by separate switching at 12 V dc.
(5 Pos. Single Throw).
160 M - DPDT
75 M 3.75 and 3.9 MHz SPDT
40 M 7.2 MHz and Tap relay - two SPDT or one DPDT

Fig 3—W7VS's 160, 75-80 and 40-meter tuner box.

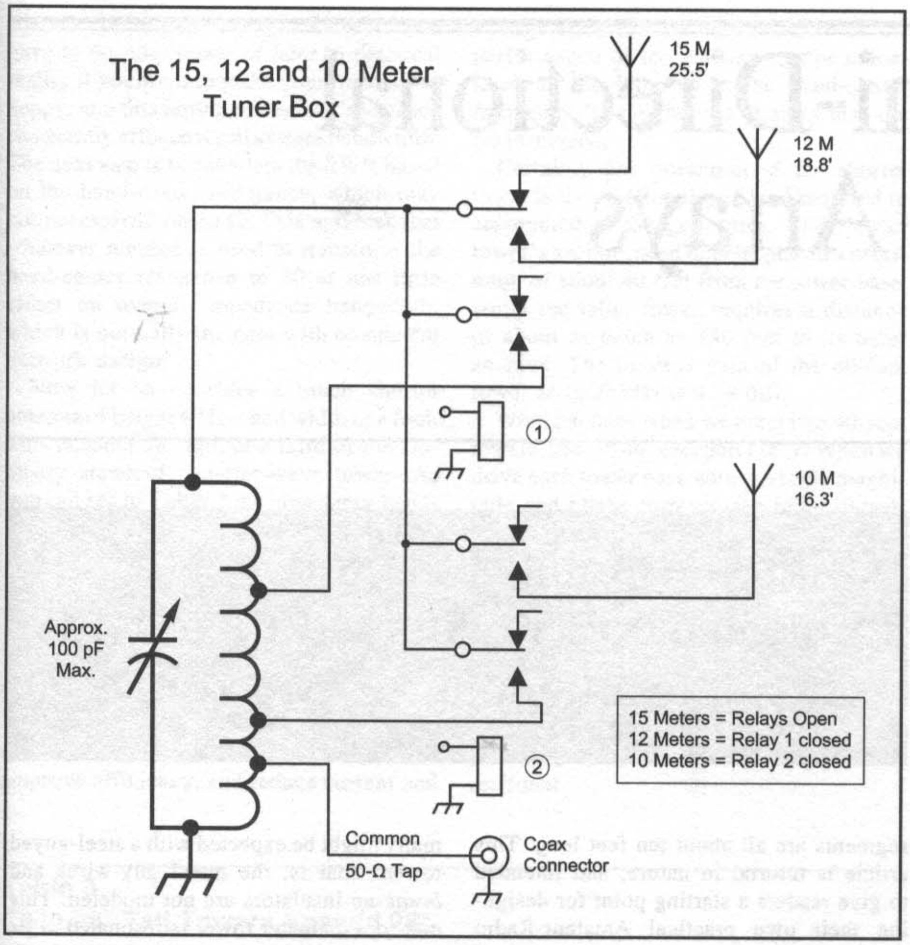

Fig 4—W7VS's 15, 12 and 10-meter tuner box.

enough maximum capacitance. For a kilowatt, however, you want an ⅛ or ¼-inch capacitor plate spacings. Single and double-pole relays are available at reasonable cost from Surplus Sales. Deltron makes a SPDT 12-V RF relay (RNF100SP) and a DPDT model (RNF100DP).

Now a bit on how to set up the tuning boxes. The fundamental instrument to use is an antenna analyzer like the MFJ-259 or Autek Research RF-1. Basic tuning can be done in your ham shack. Connect the antenna analyzer to the coaxial output jack of your tuning box. Connect a 2700-Ω resistor (a ¼ or ½-W non-inductive carbon-composition resistor will do) across the LC circuit (inductor and capacitor). This loads the circuit in much the same manner as the actual antenna would do.

Attach the coil tap for the coax at a point at about 10 to 20% from the bottom end of the coil. This is temporary but allows the initial tuning of the variable capacitor to achieve resonance at the lowest of the three frequencies for the 75 to 80 meter band. I set mine for 3.580 MHz. Once you achieve resonance, then adjust the coil tap for lowest SWR. Slight re-tuning and iteration will be necessary to maintain resonance at the desired frequency consistent with the lowest SWR.

The next step is to reduce the inductance by a turn or two (the circuit does this by shorting part of the coil using a relay) and find the resonance at the second frequency (recommended around 3.750 MHz). Don't change the tuning capacitor or the tap for the coax connection. Similarly, do this for the third section of the 75-80 meter band (Around 3.900 MHz). Again, the only change is to the tuning coil tap.

For the 40-meter band a tuning tap is found at about ½ the length of the coil. A single frequency should suffice to cover this band and the coax tap will be changed to maintain the 50-Ω input impedance.

When you connect the tuning box to the antenna wire, and the resistor is clipped out of the circuit, slight changes to the tuning may be required. It should be very close, however. In-shack tuning for the higher-frequency models will be similar, but only one set of tuning-coil tap and coax tap will be required for any one band.

Tuning the 160-meter antenna requires only to adjust a counterpoise (approximately 130 feet long, laid on the ground and or through the bushes) until an excellent SWR is reached. You could also use a number of radial wires laid out on the ground rather than an elevated counterpoise. The end result should be a frequency with a low SWR in the lower part of 160 meters. If you want to operate at the higher end of 160 meters, then shorten the antenna wire by 5 feet or so and retune the counterpoise. This should be done before final tuning of the higher bands because wire length change will effect them. (Note that you don't use a 2700-Ω resistor when tuning the 160 meter antenna.)

These relatively simple wire antennas are no substitute for Killer Arrays but they operate well over several bands and satisfy my ham instincts even after 60 years of hamming. Not bad for a bunch of simple nearly invisible wires!

Short Omni-Directional Monopole Arrays

By Grant Bingeman, KM5KG
1908 Paris Ave
Plano, TX 75025
e-mail: **DrBingo@compuserve.com**

KM5KG examines the topic of multiple short towers fed together as a single antenna.

Amateur Radio *Topband* antennas tend to suffer from physical size constraints because this relatively low-frequency band (1800 to 2000 kHz) implies a long wavelength (518 feet in free space at mid-band, 1900 kHz). Practical *Topband* size considerations impose electrically small antenna designs, which can impair impedance bandwidth, create excessive RF power losses and stress components with high voltages and high currents. It is possible to overcome some of these problems by feeding several closely spaced towers with equal phase and magnitude currents, while maintaining an omni-directional radiation pattern. This technique is commonly employed at VLF, and has been around for more than 40 years. Refer to **Fig 1**.

This article used the computer-modeling program *EZNEC Pro*, and begins by establishing references based on perfect ground, lossless tuning components and lossless wires. The effects of losses are introduced toward the middle of the article. In the initial antenna model, guy wires and insulators were not included, except in one example. To keep things simple at first and easy to compare, all wires in the initial examples are one foot in diameter, unless otherwise noted, and method-of-moments current segments are all about ten feet long. This article is tutorial in nature, and intended to give readers a starting point for designing their own practical Amateur-Radio *Topband* antenna array. Toward the end of the article, real losses are considered in both the earth and the conductors. I am going to assume that the reader has a good understanding of complex impedance and current concepts.

As a reference antenna, I will use a quarter-wave tall, lossless tower that is insulated and fed at its base over perfect ground. The physical height of the tower is 130 feet, and there is no incidental top loading, as normally might be expected with a steel-guyed tower. That is, the metal guy-wires and *break-up* insulators are not modeled. This one-foot diameter tower is resonated at its base with a series capacitance of 3150 pF. Impedance bandwidth is meaningless until the antenna is resonated. Per **Table 1** the band-edge SWR values are not too bad across the 200-kHz bandwidth requirement (200 / 1900 = 11% bandwidth). Gain of the ground wave at the horizon is 5.19 dBi.

Note that the method I prefer to compare antenna impedance bandwidths is first to resonate the antenna, or tune out the reactive component at the base of the tower with

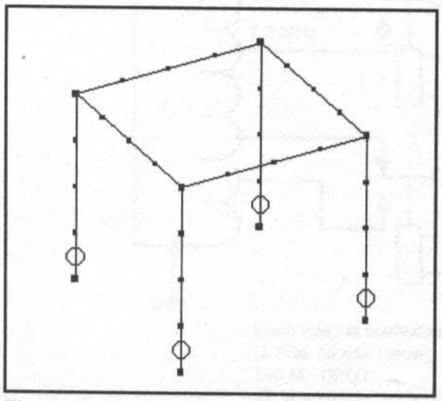

Fig 1—Four driven towers with perimeter top hat.

Table 1
90° Tall, Series-Fed Loss-Less Tower

Freq kHz	*Input Z Ω*	*Resonated Z Ω*	*SWR*	*Q*	*Power Watts*	*RMS Amps*	*RMS Volts*
1800	36.2 + *j* 1.2	36.2 – *j* 38.7	2.61				
1900	42.7 + *j* 26.6	42.7 + *j* 0	1.00	0.6	1000	4.84	208
2000	50.3 + *j* 52.0	50.3 + *j* 32.1	2.01				

Table 2
Electrically Small 28° Tall Tower

Freq kHz	*Input Z Ω*	*Resonated Z Ω*	*SWR*	*Q*	*Power Watts*	*RMS Amps*	*RMS Volts*
1800	2.95 – *j* 493.6	2.95 – *j* 185.5	3500				
1900	3.30 – *j* 462.1	3.30 + *j* 0	1.00	140	1000	17.4	8050
2000	3.66 – *j* 433.1	3.66 + *j* 182.7	2800				

a series coil or capacitor, per Table 1. You have to do this sooner or later in practical reality if you want to make your transmitter happy, and this tuning of the feed reactance can greatly affect overall system bandwidth. The next step is to calculate the SWR based on the band-center resistance, which may not necessarily be 50 Ω. This assumes that whatever method is used to transform the band-center resistance to 50 Ω has little effect on overall impedance bandwidth, which is normally the case with competent network design.

Now let us consider a much shorter antenna of height 40 feet and width one foot. This is about 28° tall, or a third of the "industry standard" quarter-wave tower. As you can see in **Table 2** the impedance bandwidth is very poor. If we were to include the losses of the 38.7 μH resonating coil, bandwidth would be better but still poor. The efficiency of a short antenna is usually poor because the currents in the ground system, the earth, the tuning coil and the steel tower are relatively high. Anything we can do to increase the input resistance and decrease the input reactance to the tower(s) will improve efficiency, and reduce current and voltage stresses. A rough measure of the performance of the antenna can be calculated as the input Q at the band-center frequency. The higher the Q, the worse the performance.

Certainly one attraction of the shorter tower is the smaller plot of land required to accommodate the guy-wires. The shorter tower's anchors need only be placed a maximum of about 40 feet from the tower base, while the taller tower requires a distance of about as much as 130 feet to its outer anchors. The lossless gain of the 40-foot tower at 1900 kHz is 4.78 dBi.

What happens when we erect two 40-foot towers, spaced 40 feet apart (28°)? When we drive each tower base with the same magnitude and phase currents, the input impedance of each tower is the same as its twin. The effect is to double the input resistance of each tower, split the power evenly between the towers, and reduce the individual tower currents and voltages. Compare Table 2 and **Table 3**. Note that the input Q of the twin towers is roughly half that of the single-tower case. Array gain varies from 4.63 to 4.88 dBi, essentially omnidirectional.

Table 3
Twin 28° Tall Towers Spaced 28°

Freq *kHz*	*Input Z* *Ω*	*Resonated Z* *Ω*	*SWR*	*Q*	*Power* *Watts*	*RMS* *Amps*	*RMS* *Volts*
1800	$5.75 - j\,508.3$	$5.75 - j\,57.6$	92.1				
1900	$6.41 - j\,475.7$	$6.41 + j\,0$	1.00	74.2	500	8.8	4200
2000	$7.10 - j\,446.0$	$7.10 + j\,54.7$	67.8				

Table 4
Four 28° Tall Towers Spaced in 28° Square

Freq *kHz*	*Input Z* *Ω*	*Resonated Z* *Ω*	*SWR*	*Q*	*Power* *Watts*	*RMS* *Amps*	*RMS* *Volts*
1800	$11.1 - j\,529.7$	$11.1 - j\,60.3$	28.4				
1900	$12.4 - j\,495.5$	$12.4 + j\,0$	1.00	40.0	250	4.49	2230
2000	$13.7 - j\,464.5$	$13.7 + j\,57.1$	21.1				

Table 5
Four 28° Tall Towers with Perimeter Top Hat

Freq *kHz*	*Input Z* *Ω*	*Resonated Z* *Ω*	*SWR*	*Q*	*Power* *Watts*	*RMS* *Amps*	*RMS* *Volts*
1800	$18.8 - j\,325.7$	$18.8 - j\,42.3$	6.42				
1900	$20.9 - j\,299.1$	$20.9 + j\,0$	1.00	14.3	250	3.46	1040
2000	$23.3 - j\,274.8$	$23.3 + j\,40.0$	5.11				

Table 6
Four 28° Tall Towers with Perimeter Top Hat and Diagonals

Freq *kHz*	*Input Z* *Ω*	*Resonated Z* *Ω*	*SWR*	*Q*	*Power* *Watts*	*RMS* *Amps*	*RMS* *Volts*
1800	$20.2 - j\,291.4$	$20.2 - j\,39.3$	5.20				
1900	$22.6 - j\,266.1$	$22.6 + j\,0$	1.00	11.8	250	3.33	890
2000	$25.1 - j\,242.8$	$25.1 + j\,37.3$	4.23				

What happens to the power our transmitter applies to this twin-tower antenna? In this case, since the two towers have identical dimensions, input currents and input impedances, the power splits evenly between the two towers. Ignoring losses, if we put 1000 W into the antenna, we can expect 500 W in each tower. But what is really useful is the halving of tower current and voltage. This occurs because the power in each tower is half of the single-tower case and the input resistance of each tower is double that of the single-tower case. This only happens when the towers are electrically close together and the mutual impedance is high.

If we erect four 40-foot towers, spaced in a 40-foot square, there is additional improvement, at the expense of additional complexity, steel, land, insulators, transmission line and impedance-matching equipment. The input resistance at the base of each tower is now quadrupled, and the SWR has improved considerably per **Table 4**. Also the tower currents and voltages are now only a quarter of those of the single-tower case. Gain is a constant 4.73 dBi at all compass bearings. The reader may wish to experiment with different tower spacings in order to find an optimal effect on impedance bandwidth, particularly within the constraints of his available land. Take care to include the ground losses, which strongly affect gain, as we shall see later in this article.

If we add horizontal wires around the perimeter of the four tower tops per Fig 1, the subsequent top loading reduces input reactance, increases input resistance, and improves bandwidth considerably per **Table 5**. Note that this model assumes no sag in the top-loading cables. Practical amounts of sag would not produce quite the same improvement. Also note that all wires are still one foot in diameter. Array gain is 4.81 dBi, a slight improvement over the previous case where no top loading was employed.

If we add horizontal diagonal wires between opposite tower tops intersecting at the center of the square, the additional top loading allows an incremental bandwidth improvement per **Table 6**. This configuration also includes the perimeter top-loading wires of Table 5. It is probably not cost-effective to add more wires to the top hat than the single interior cross that yields Table 6. However there are some navy VLF antennas where cost is no object, since vital military communication depends on their performance. In some cases the antenna site may almost be paved in copper ground wires, and the sky seemingly covered in copper or aluminum top-loading cables. The gain of this configuration is 4.82 dBi.

If we are not using synthetic wire rope for the guy cables, we can obtain additional top

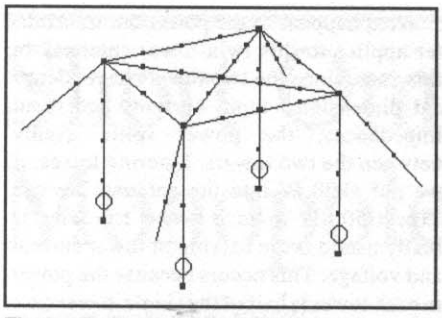

Fig 2—Four-tower array with top-hat and guy-wire loading.

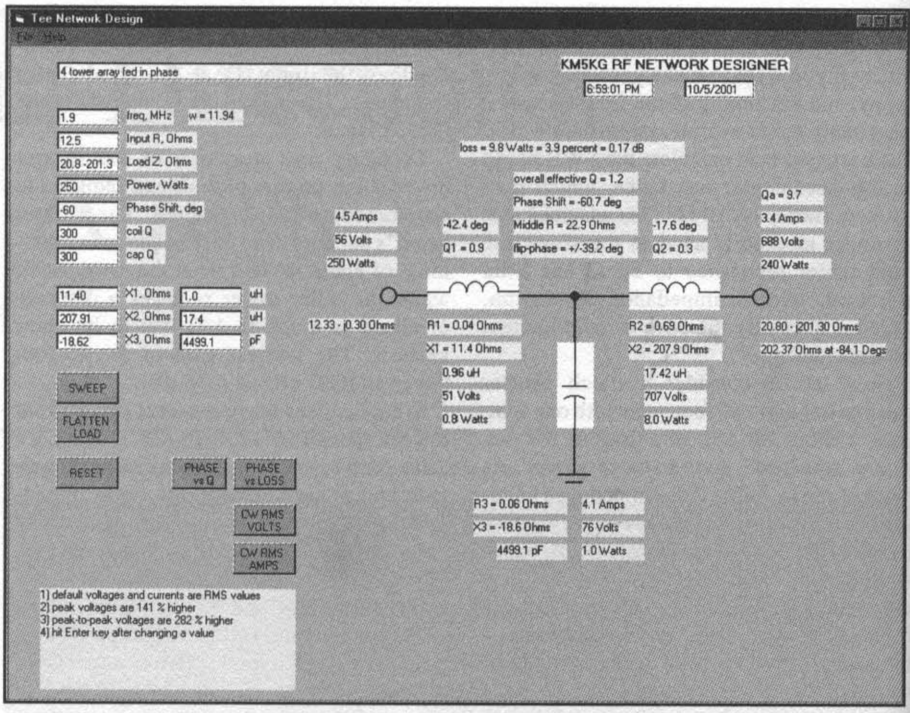

4 tower array fed in phase

KM5KG RF NETWORK DESIGNER

6:59:01 PM 10/5/2001

1.9 freq, MHz w = 11.94
12.5 Input R, Ohms
20.8 -201.3 Load Z, Ohms
250 Power, Watts
-60 Phase Shift, deg
300 coil Q
300 cap Q

11.40 X1, Ohms 1.0 uH
207.91 X2, Ohms 17.4 uH
-18.62 X3, Ohms 4499.1 pF

loss = 9.8 Watts = 3.9 percent = 0.17 dB
overall effective Q = 1.2
Phase Shift = -60.7 deg
Middle R = 22.9 Ohms
flip-phase = +/-39.2 deg

4.5 Amps
56 Volts
250 Watts
12.33 - j0.30 Ohms

-42.4 deg
Q1 = 0.9
R1 = 0.04 Ohms
X1 = 11.4 Ohms
0.96 uH
51 Volts
0.8 Watts

-17.6 deg
Q2 = 0.3
R2 = 0.69 Ohms
X2 = 207.9 Ohms
17.42 uH
707 Volts
8.0 Watts

Qa = 9.7
3.4 Amps
688 Volts
240 Watts
20.80 - j201.30 Ohms
202.37 Ohms at -84.1 Degs

R3 = 0.06 Ohms
X3 = -18.6 Ohms
4499.1 pF
4.1 Amps
76 Volts
1.0 Watts

1) default voltages and currents are RMS values
2) peak voltages are 141 % higher
3) peak-to-peak voltages are 282 % higher
4) hit Enter key after changing a value

Fig 3—Coupler at each tower base, using *KM5KG RF Network Designer* software.

Table 7
Four 28° Tall Towers with Perimeter Top Hat, Diagonals and Hot Guy Wires

Freq kHz	*Input Z Ω*	*Resonated Z Ω*	*SWR*	*Q*	*Power Watts*	*RMS Amps*	*RMS Volts*
1800	$18.6 - j223.8$	$18.6 - j33.1$	4.63				
1900	$20.8 - j201.3$	$20.8 + j0$	1.00	9.7	250	3.47	700
2000	$23.2 - j180.5$	$23.2 + j31.4$	3.81				

Table 8
Four 35° Tall Towers Spaced in 28° Square with Perimeter Top Hat

Freq kHz	*Input Z Ω*	*Resonated Z Ω*	*SWR*	*Q*	*Power Watts*	*RMS Amps*	*RMS Volts*
1800	$26.9 - j270.3$	$26.9 - j38.7$	3.57				
1900	$30.2 - j244.5$	$30.2 + j0$	1.00	8.1	250	2.88	710
2000	$33.8 - j220.8$	$33.8 + j36.6$	2.99				

loading by moving the insulator from the top of the highest guy-tower connection to a position roughly half way above the earth per Fig 2. Assuming a guy cable angle of 45°, connected at the top of each tower and run out along the diagonal, if the top half of each of these four cables is hot, then **Table 7** results. Again we see an incremental improvement. Note that the hot guy-wires shadow the tower such that a reduction in radiation resistance is seen. However this decrease in resistance is offset by a larger decrease in reactance such that the input Q is reduced. Flat horizontal top-hat wires do not produce any shadowing effect, except insofar as they may sag.

Coupling Power to the Towers

If we use four electrically quarter-wave lengths of transmission line, and parallel these lines when their input impedance is each 200 Ω, the common-point input impedance is then 50 Ω. A transmitter or typical 50-Ω transmission line can be located at this 50-Ω point. If the quarter-wave lines have a surge impedance of 50 Ω, they would have to be terminated in a resistive 12.5 Ω at the towers to produce 200 Ω non-reactive at their inputs. Then the overall input impedance at the common point is 200 / 4 = 50 Ω. Thus each tower base would require an identical coupler that resonated the 1900-kHz capacitive reactance, and transformed the 1900-kHz resistance to 12.5 Ω. Also the four quarter-wave transmission lines would have to be able to withstand the stresses imposed by a SWR of 4.0 at a quarter of the total input power.

Fig 3 shows a typical coupler design for the particulars in Table 7. Note that most of the losses occur in the series resonating coil. The input coil is small, and can essentially consist of the connection to the transmission line. In other words, the –60° of phase shift across this T network brings it very close to an L network, where the input component disappears. In order to preserve some adjustability, it would be better to pick a larger phase shift across the T networks so the input coil is more substantial, and does not demand a negative or capacitive value during the adjustment process. Remember, all four coupler phase shifts must be equal to obtain equal-phase currents in each tower when equal length feeder lines are employed.

There are a number of different ways to get equal magnitude and phase currents, equal powers and equal impedances at the base of the four towers. There is a balance between adjustability and cost. It is important to realize that the four base impedances will vary by different amounts during network adjustment. That is, the four towers are closely coupled, hence interact. See my Web site for detailed discussion of phased array modeling and adjustment, **http://www.qsl.net/km5kg**.

We are probably not going to get 50 Ω exactly nor the same bandwidth as that of a single 90° high tower by using four 40-foot towers, even with additional top-loading. A taller tower of 50 feet arranged in a square might do it. For example, the configuration of Table 5 using the same 40-foot square and perimeter top loading only, yields the results of **Table 8**. With some additional top loading of these 50-foot towers, perhaps with that obtained by the other guy-wires not modeled in this article, the performance equivalent to that of a single quarter-wave tower can be approached.

But don't forget the shadowing effect—too much hot guy-wire can work against you. The lower the radiation resistance, the greater the currents and RF losses in the steel and ground.

The ultimate question remains: "Is all this complexity worth it?" How much more does it cost to erect and couple power to four 50-foot towers, than it does to erect and feed a single 130-foot tall tower? Assuming one has the real estate available to safely guy the tall tower, is the cost of the wider, stronger tall tower better than the cost of four shorter, thinner towers? Do you want to maintain and climb a 130-foot tower, or would you feel safer climbing a 50-foot tower? Do you feel safe living in the shadow of a 130-foot tall tower? Are you as good a mechanical engineer as you are an electrical engineer? Will you be able to sleep at night? All these questions require careful consideration and discussion with your spouse and neighbors.

Monopole Array Summary

The most cost-effective omni-directional monopole array design for a specific location and budget is a balance between impedance bandwidth, power loss, tower height, number of towers, adjustability and coupling network components. In some cases, an array of two taller towers may be preferable to an array of four shorter towers. It would be nice if such an array presented a single 50-Ω resonant feed point, but the unpredictable variables of these large monopole antennas (earth characteristics sensitive to the weather, individual copper ground system dimensions and installation practices, etc) discourage a cookbook approach.

Earth conductivity can make a huge difference in the efficiency of the shorter arrays, and in some cases it is best to stick with a single tall tower. Thus each site deserves special consideration before a multi-tower omni-directional array is chosen.

Lossy Earth Cases

Let us now establish a lossy reference antenna, consisting of a 130-foot tower centered over a radial ground system of 32 #10 AWG bare copper wires, each 130-feet long, buried six inches in 5 mS/m earth with a dielectric constant of 13. As expected, the tower-base series-input resistance is a bit higher than that of the lossless case. The new input impedance contains both radiation and loss resistance, and is $48.0 + j\,29.6$ Ω at 1900 kHz, while the omni-directional ground-wave gain on the horizon is –4.64 dBi, almost 10 dB lower than the gain of the lossless case. Compare this with the lossless values in Table 1. If we define antenna efficiency as radiated power divided by overall input power, this is the same as the ratio of the radiation resistance to the total resistance. In this case 42.7 / 48.8 = 88 percent. [The rest of the loss in gain compared to the case for perfect ground in Table 1 is due to losses of the ground-wave signal as it travels over lossy, real-world soil.—*Ed.*]

Where ground systems of multi-tower arrays intersect, they are assumed to be bonded along a bisecting strip of copper. The length of the buried radials is assumed to be equal to the height of the tower(s) in all cases. Thus short towers will have short ground wires in this article. This is forced by the assumed physical limits of the land available for erecting towers. If more land is available, you may use longer ground wires, which will improve antenna efficiency.

The 40-foot tall tower has a lossy input impedance of $5.65 - j\,460.0$ Ω at 1900 kHz. The gain is –6.72 dBi. Comparing this to the values in Table 2, one can see that the losses are an appreciable portion of RF power delivered to this antenna. This is typical of an electrically short antenna, where the radiation resistance is small and the loss resistance is comparable to the radiation resistance. The power efficiency of this tower is 3.30 / 5.65 = 58 percent. This does not include tuning-component losses.

When we add a second tower and ground system, the input impedance of each tower becomes $9.90 - j\,471$ Ω at 1900 kHz, and the gain is –6.19 dBi. Thus the antenna power efficiency is improved over the single-tower case, but is still poor: 6.4 / 9.9 = 65 percent. If we double the number of wires in the ground systems, the gain becomes –6.12 dBi and the tower input impedance becomes $9.75 - j\,475$ Ω at 1900 kHz. This is hardly worth the effort and expense of the additional wire.

Note that all the lossy cases assumed an earth conductivity of 5 mS/m. If you are lucky enough to have 30 mS/m soil, then ground losses will be less of an issue. If you live in a sandy desert area, you may find that your earth conductivity is closer to 1 mS/m, in which case losses become very significant.

References

For additional articles see **www.qsl.net/km5kg** and **www.contelec.com.** A free demo copy of the RF design program used in this article that allows impedance matching and Smith-chart display is available for download from the author's Amateur Radio web site. A feature in the Smith chart module permits automatic resonance of the impedance sweep data, and calculation of the resulting band-edge SWR. See the built-in help text that comes with the demo program.

A Practical 30-Meter Vertical

By Ken Elsberry, WD4ERM
503 Blaine Cr
Quitman, GA 31643

Here's how to put up a 30-meter wire vertical and how to tame the ground radials.

This antenna is a quarter-wave vertical, ground mounted and using ground radials. Over the years I have used several arrangements for dipole and inverted-V designs for 30 meters, but I have had better overall results with this vertical. This is the only band I have found where the vertical has an advantage over simple horizontal antennas, although I have not had the opportunity to check it against a 30-meter beam.

Noise seems to be noticeably less on the vertical than on other antennas at my location. This is unusual, as it is normally the other way around. Sometimes if the received signal is even less on the S meter without noise, it is indeed louder to the ear, or at least easier to copy.

I used the traditional formula (234 divided by the frequency in MHz) to arrive at the length of the radiator, 23.15 feet. I made the radials 5% longer, at 24.3 feet. I used eight radials in the three different versions of these antennas I have built. However, I don't think you can have too many radials, so use as many as you can, with a minimum of at least eight.

I have always believed it is best to keep construction as simple as practical, so I decided to use a solid #10 vertical wire as the radiator. I started out with an eight-foot ground rod close to the base of a pine tree. I leave four to six inches of the ground rod sticking out of the ground and attach a simple ground clamp to the top of the ground rod. This holds a screw-in type insulator used for electric fences. See **Fig 1** for details. The radiator wire loops around the insulator and at the other end, some 23 feet away, I attach some form of small insulator, usually a ceramic egg-type or plastic "dog bone."

From the top insulator I attach a weather-resistant $^{3}/_{16}$-inch polyester rope and pull it over a convenient limb located directly over the ground rod and bottom insulator. To make the wire radiator stand parallel to the tree, I pull the rope down tight, tying it off to a spike driven into the tree or to one of the clamps on the ground rod, as shown in **Fig 2**.

I next attach radials to the ground rod using another ground clamp below the first one, extending the radials in a spoke-like pattern from the rod. You can either bury the radials or pin them down tight to the ground and let grass grow over them. Either way will work fine electrically. I have used a yard edger to cut grooves in which to bury radials.

Lately, I have started using so-called "plumber's pipe hooks" with the 90° end crooks cut off. **Fig 3** shows two of these side-by-side: the original at the upper left and the modified version with the cut-off crooks on the lower right. I found mine at Home Depot, by PHP (Prairie Home Products, Inc.). These are ½ inch by 6 inch wire pipe hooks and sold for $2.41 in a package of 20. I find that pinning the radials with these giant hairpins about 3 to 5 feet apart works fine for me.

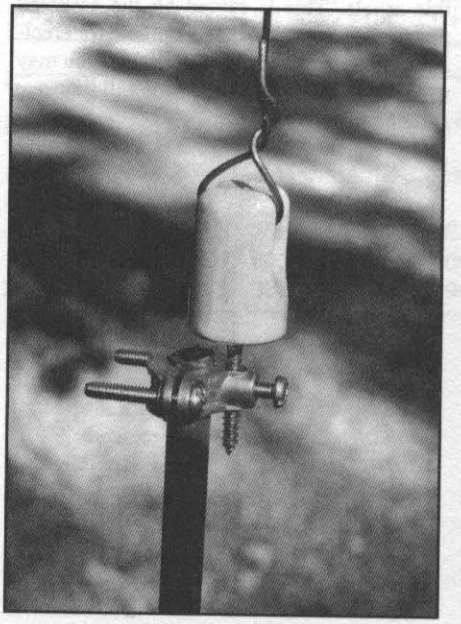

Fig 1—Closeup view of ground rod and clamp used to hold mounting screw for fence-post type insulator. The vertical wire insulator is attached to the top of the insulator.

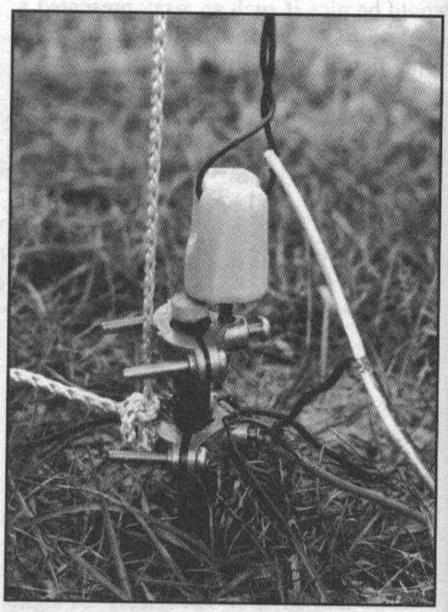

Fig 2—Completed 30-meter vertical, with ground radials clamped to ground rod with a second ground clamp. The pull-down polyester rope is at the left, tied to the second clamp. The RG-8X coax is the white cable at the right.

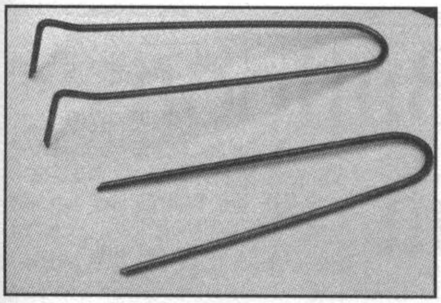

Fig 3—Before and after view of "pipe hook" used by WD4ERM. The one at the upper left is the original shape, and the one on the bottom right has had its 90° crooks cut off.

I attached the center conductor of RG-8X coax to the radiator, with the braid going to the ground rod. Before you solder the connection to the center conductor, make sure you measure the SWR and make any necessary adjustments to the length of the radiator. You will probably have to shorten it somewhat to achieve resonance. My vertical had better than a 1.2:1 SWR over the 30-meter band.

This vertical is certainly simple to build, since most hams can get the materials easily. It is also inconspicuous, especially with the green-insulated wires I used for the radials, which barely show in the grass!

Experiments with a Balloon-Held Vertical Antenna

By Stewart D Personick ("Stu"), AB2EZ
150 Mendham Rd
Bernardsville, NJ 07924

Hams have dreamed about balloon-supported antennas for years, but AB2EZ has actually used them.

For the last two summers I have been experimenting with a variety of wire vertical antennas, held up by a 7-foot diameter helium filled balloon. I purchased the balloon from Above and Beyond Balloons in Laguna Hills CA (**http://www.advertisingballoons.com/**). The balloon has a few pounds of net lift, and requires about $^2/_3$ of a standard tank of helium. It is made of a thick plastic material, similar to that of a small backyard wading pool. It holds its helium very well, requiring a few percent of topping off every week or so.

I keep the balloon outside, tethered about 4 feet off the ground, when not in use. So far, no one has attempted to steal it or vandalize it. In my situation, it is safer outside on the grass than it is in my garage, at least with respect to sharp objects.

Fig 1 shows my daughter, Michelle (14), KC2DBH, and the helium balloon at a height of about 20 feet, with my house in the background. Also visible in Fig 1 is my multi-band vertical mounted on a playhouse. Although you can barely see it, the center portion (balun, terminator and two spreaders) of my multi-band folded dipole is just to the left of the balloon in the photo.

Balloon-Supported Half-Wave Verticals

I have experimented with quarter-wave verticals and with half-wave vertical dipoles on 75 meters and 20 meters. With a single radial, the quarter wave verticals worked, but only marginally compared to my other conventional multi-band vertical and horizontal antennas. The half-wave vertical dipoles work very well—outperforming my conventional antennas on 20 meters by several dB or more, depending upon the band conditions.

To make a 20-meter half-wave vertical, I use #20 wire for the top half of the dipole,

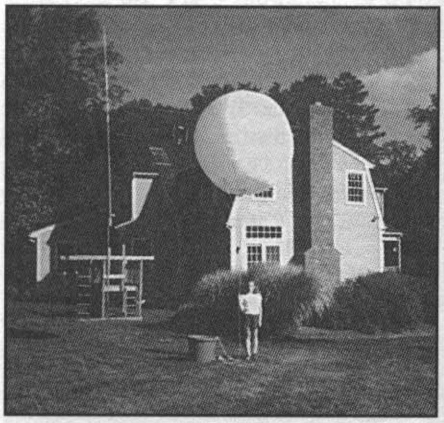

Fig 1—Photo of AB2EZ's daughter Michelle, KC2DBH, with the helium balloon at a height of about 20 feet.

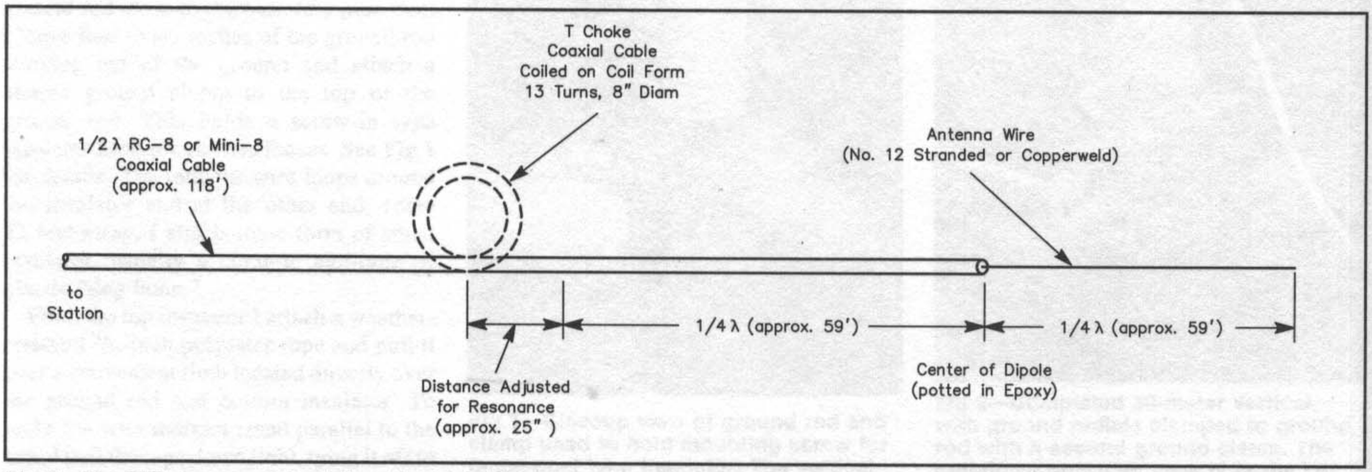

Fig 2—The RFD (resonant feed-line dipole) half-wave dipole antenna for 80 meters. Be sure to weatherproof the feed point. (Courtesy, *The ARRL Handbook*, 2002 Edition.)

and I use RG-8X for both the feeder and for the bottom half. See **Fig 2** showing the "Resonant Feed-Line Dipole" from the 2002 Edition of *The ARRL Handbook* for a horizontal version of this design.

For the 75-meter version, I use #20 wire for the top half of the dipole, and I use RG-174 coax for both the feeder and the bottom half. In each case, a coil of coax acts as a choke to terminate the outside of the outer shield of the coax at the quarter-wave point. On 20 meters, the coil is 8 turns @ 1 foot per turn. On 75 meters, the coil is 8 turns @ 2.5 feet per turn.

The RG-8X antenna can handle about 500 W. The RG-174 antenna had no problem with 50 W (carrier) of AM or about 200 W (peak) SSB. The weak point for power handling is the coaxial choke.

I tether the balloon with both the antenna and the non-conductive tether cable that came with the balloon. While the antenna itself appears to be able to hold the balloon under low wind conditions, I do not trust the wire for long-term use.

The length of both the wire and of the coax between the center of the dipole and the choke needs to be adjusted for a good SWR. On 20 meters, I was able to achieve an SWR of less than 2:1 over the entire band with the wire and coax at somewhat more than ¼ wavelength. In fact, I have installed a sloping version of this antenna between a tree and my house, using insulated #14 wire for the top half. For that antenna, the wire length and coax length required to achieve a good SWR was 18 feet. On 75 meters, I was able to achieve an SWR of less than 2:1 at my desired operating frequency.

The 20-meter version is great for reasonably calm days, and I can leave it up at 40 feet (dipole length plus height of the balloon and its associated tethers) without much attention. The 75-meter version, at approximately 140 feet, requires very calm conditions and constant watching due to the presence of nearby trees.

I obtain tanks of helium from a local dealer who sells industrial gases, at a price of approximately $40.00 per tank plus delivery charges. Two tanks last me for the entire summer season, since I do not deflate the balloon when I'm not using it. The helium tanks are very heavy so I use a heavy-duty handcart to move one into my driveway when I want to add helium to the balloon. I keep the tanks securely attached to a garage wall for storage.

Since the balloon is not under pressure (relative to the outside air), you can open the large filling sleeve at the bottom, and the helium will not rush out. In fact, when I top the balloon off with helium, I leave the large sleeve open, at the beginning, to push out air that may have entered the balloon. That is, just as helium leaks out of the balloon, air can leak in.

So far, I've had a lot of fun working stations on 20 and 75 meters, and telling them that I am using a vertical dipole held up by helium-filled balloon. In most cases, their contact with me is the first with a balloon-held antenna, and I usually get a lot of questions, plus very positive comments, such as: "I've always wanted to try that."

Untangling the Folded Unipole

By Rich Stocking, MMØBYC, N7OP
8215 West Avenue D,
Lancaster, CA 93536

Here's a fresh look at this versatile antenna, with an emphasis on multi-band usage and "QSY-ability."

The *folded unipole* has been described in the amateur[1] and professional literature[2,3] for a number of years. The advantages cited for the folded unipole include:

- It has a grounded base for lightning protection.
- It doesn't require a specified electrical length, such as quarter-wave length.
- It has broadband characteristics.
- It boasts increased feed-point resistance compared to base-fed verticals.
- You can use the same tower supporting an HF Yagi or quad.
- There is no requirement to decouple electrical feeds to rotators, VHF/UHF preamps or other electrical equipment.
- No lighting chokes or transformers are required when tower lights are used.

Some historically cited disadvantages of the folded unipole include:

- It is primarily utilized only in the AM Broadcast Service or at MF.
- It is normally designed for use on one frequency or a narrow range of frequencies.
- There is very little design information in amateur publications, with no formulas, only anecdotal stub-matching criteria.

Purpose

The purpose of this article is to show an example using a typically available commercial tower to cover the 80,40 and 30-meter bands. I will concentrate on 40 meters but the modeling and data is available to anyone wishing further study on the other bands. I will show the effect of changes in design based on many construction-related variables. I will show construction methods to achieve broadband coverage for all of those bands, with a simple switching scheme that allows rapid QSY between bands.

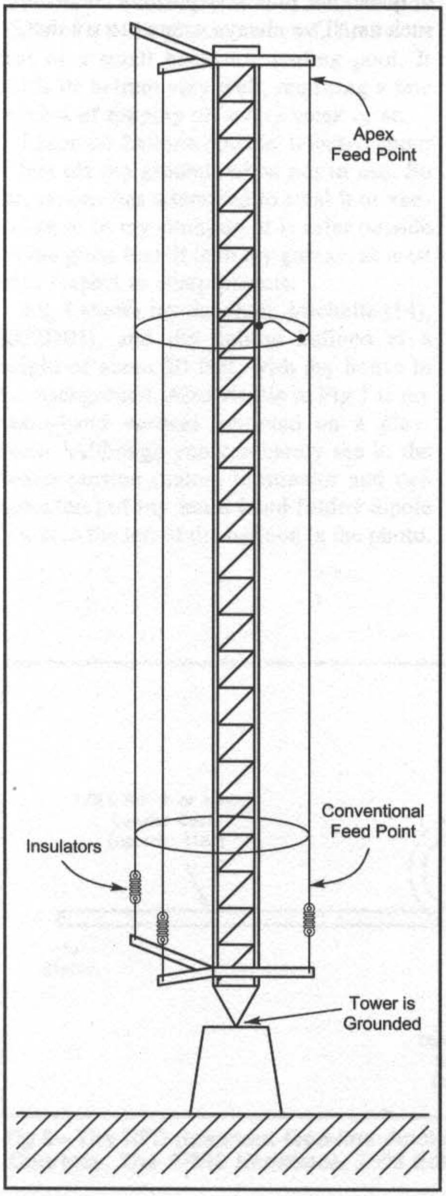

Fig 1—Used commercially for AM broadcasting, the folded unipole antenna can be adapted fairly easily for Amateur-Radio use. Tuning may be accomplished by separate jumpers or one jumper and a commoning ring, as shown. (Figure from *The ARRL Antenna Compendium, Vol 2*, Fig 1, p 36.)

A Review of Folded-Unipole Theory

The folded unipole has often been referred to as a "transmission-line antenna."[1] The outer skirt wires form one conductor while the inner tower forms the second. See **Fig 1**. The antenna is fed at a point on the base of the skirt and then the RF current flows up the outer wires and returns back down to ground through the grounded base of the tower. To accomplish a specific impedance transformation, such as 50 Ω, at the base of the skirt, a shorting stub connects the outer skirt to a point on the tower.

For modeling and generating the tables in this article I used a generic tower, representing a Rohn 25 series of tower, 48 feet high, with a standard 12-inch face. I used #6 stranded wire (0.184 inches) for the skirt wires.

On top of this tower you can place any antenna, such as a triband beam or a quad. I have modeled multiple types of towers, (including tapered ones) and multiple configurations of skirt wires and feed lines, but have restricted this article to a single method for simplicity.

A typical Rohn tower would be about 48-feet tall but to give mechanical clearance and to minimize interaction of a tribander or other HF antenna with the skirt, I'll use only 44 feet of the tower. The ability to electrically utilize a portion of a tower is an extra benefit of this type of antenna. You could choose to utilize a smaller portion if a specific mechanical reason existed.

The folded unipole has many configurations, mostly varying in number of outer skirt wires and in the bottom feed-ring configuration. For this article I will stay with a generic three-wire outer skirt and no special ring configurations. This is to allow duplication, modeling and construction of similar antennas. I examined both bottom-feed and apex-feed configurations, with a constant of 6 Ω to simulate all RF losses.

A particular word of caution: LB Cebik and others have warned of the difficult nature of applying *NEC* modeling to closely spaced wires. The nature of the folded unipole makes this a normal modeling occurrence with every change in configuration.

A 44-foot section of tower is electrically about 57.6° high at 3.580 MHz, 113.2° at 7.035 MHz and 163.2° at 10.140 MHz. (If you recognize all these as RTTY frequencies, you receive extra credit!) The normal radiation patterns for each of these electrical lengths are applicable and will not be displayed in this article. All of these heights produce low takeoff angles with minimal high-angle lobes.

What is somewhat unique is that at close to a half wavelength on 30 meters—a normal height avoided due to impedance-matching problems for base-fed verticals—the folded unipole works just fine. Shown in **Table 1** is the stub height for matching the 44-foot section of tower to 50 Ω on 7035 kHz. Of course, as with all antennas and in life, *you don't get something for nothing.* The accompanying reactance is shown as well.

We will deal with the reactance as a matching issue in the latter portion of the article. What are important are the very flat curves for the resistance and reactance across the band. A detailed study on 40 meters follows.

Table 1

Stub height for 44-foot tower section at 7035 kHz, with side-wire configuration, #6 wire, 12-inch tower face, 18-inch separation.

Stub Height Feet	*Resistance Ω*	*+j Reactance Ω*
26.1	66.32	286.68
25.6	61.77	277.17
25.1	57.58	268.06
24.6	53.72	259.32
24.1	50.15	250.92
23.6	46.85	242.85
23.1	43.79	235.07
22.6	40.95	227.56
22.1	38.30	220.31

Variable 1: Stub Height

Taking a stub height of 24.1 feet we would achieve a resistance of 50.15 Ω with a reactance of + *j* 250.9 Ω. An analysis of the impedance values modeled at a stub height of 24.1 feet across the entire 40-meter band is shown in **Table 2.**

Variable 2: Wire Spacing from Tower

I examined the second variable of spacing from the tower to the skirt wires for a side-mounted, bottom-fed configuration. The separation of wires away from the tower helps determine the transformation ratio of the skirt to the tower. The feed-point resistance and reactance results versus distance from the tower are shown in **Table 3** and the reactance is graphed in **Fig 2.**

From Table 3 you can see that the variable of wire spacing does not drastically change the reactance achieved by moving the stub matching height. A change of 45 Ω for the reactance over the entire 40-meter band for spacings from 12 to 60 inches can be easily matched at the skirt base—this gives what I call "QSY-ability."

The important factor for spacing revolves around construction and safety factors for the tower climber. For towers that are routinely climbed to service items near the top, you should base the spacing of the skirt wires on the ease of climbing. The decrease of reactance with increasing skirt wire spacing, while easing the matching problem, is not so steep a curve to override construction priorities.

Variable 3: Skirt-Wire Size

Having seen that the spacing of the skirt wires effects the stub-matching point, **Table 4** shows the results of changing the skirt-wire diameter while holding the other factors constant.

You can see that the proper 50-Ω feed point can be achieved with any wire size. Considerations for the antenna constructor would in-

Table 2

44-foot tower section, with side-wire configuration, #6 wire, 12-inch tower face, 18-inch separation.

Frequency kHz	*Skirt Resistance Ω*	*Reactance + j Ω*
7000	49.92	246.73
7025	50.08	249.72
7050	50.26	252.74
7075	50.45	255.79
7100	50.64	258.88
7125	50.86	262.00
7150	51.08	265.16
7175	51.32	268.35
7200	51.57	271.58
7225	51.83	274.85
7250	52.10	278.16
7275	52.39	281.50
7300	52.69	284.90

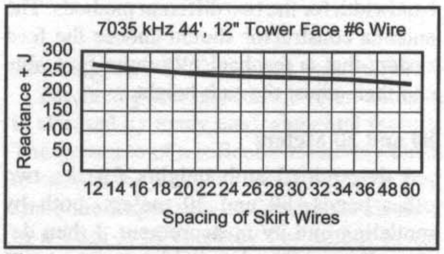

Fig 2—Feed-point reactance vs skirt-wire spacing from tower face at 7035 kHz on 44-foot high tower with 12-inch face and three #6 skirt wires fed at the bottom.

Table 3

At 7035 kHz, #6 side wires, 12-inch tower face, 6 Ω tower RF losses.

Distance Inches	*Stub Height Feet*	*Resistance Ω*	*Reactance +j Ω*
12	25.0	49.828	266.235
14	24.7	50.328	260.856
16	24.3	49.687	254.039
18	24.1	50.153	250.928
20	23.8	49.709	246.326
22	23.6	49.763	243.461
24	23.4	49.679	240.684
26	23.3	50.118	239.438
28	23.1	49.828	236.783
30	23.0	50.086	235.588
32	22.9	50.278	234.406
34	22.7	49.793	231.893
36	22.6	49.874	230.759
48	22.1	50.181	225.429
60	21.7	50.232	221.506

Table 4

44-foot high tower, 12-inch tower face, side feed, 18-inch separation and 3 wires.

Wire Size AWG	*Resistance Ω*	*Reactance +j Ω*	*Stub Height Feet*
0000	50.259	225.743	25.7
000	50.177	228.366	25.5
00	50.056	230.864	25.3
0	49.928	233.378	25.1
1	49.781	235.843	24.9
2	49.734	238.820	24.7
6	50.153	250.923	24.1
10	50.213	262.219	23.5
20	49.750	288.976	22.1

Table 5

Feed point (bottom or apex) for 44-foot skirt height on 48-foot tower, with a 12-inch face, 18-inch separation, and three #6 skirt wires.

Bottom MHz	*Apex MHz*	*Height Feet*	*Resistance Ω*	*Reactance +j Ω*
7035	—	23.7	50.158	250.928
—	7035	30.2	49.981	177.460

clude loss, power level, cost, weight and wind loading.

Variable 4: Bottom-Feed Versus Apex-Feed of Skirt Wires

Fig 1 shows the construction difference for bottom versus Apex feeding of skirt wires. The performance differences for different feed-point positions are detailed in **Table 5** below. There is practically no difference in bandwidth for the two different methods. The antenna constructor should choose the feed system that is mechanically more favorable and then adjust the stub height.

80 and 30 Meters

I determined stub heights for the two other bands, 80 and 30 meters, both by modeling and by measurement. I then designed a multiband switching arrangement to allow switching between bands. On 80 meters, due to the electrical length of nearly 57°, the broadbanding is only about 200-kHz wide. The stub heights for 50 Ω on 80 meters vary between 38.9 feet in height for 3580 kHz to 34.4 feet for 3750 kHz. To QSY between the CW and phone portions, I fashioned a switching arrangement between the two stubs. I originally hoped that the entire band would be covered by a single stub location but physics won out in the end.

On 30 meters the entire band can be covered with minimal changes in matching requirements. The 50-Ω height appears at 10.5 feet. The accompanying reactance is higher, in the range of +773.67 Ω.

Modeling versus measurement

In tests I conducted on two towers in different QTHs, NM and CA, modeling allowed me to get close to the right stub heights. Different antennas, each with differing ground types, radial numbers and different tower-weld configurations exhibited slightly different tolerances and subtleties. In both cases I got very close to the 50-Ω match within minutes, compared to the time-consuming trial-and-error methods I had used previously.

The matching necessary to deal with the reactance on each band has been addressed in previous articles on folded unipoles and consists primarily in adding enough capacitive reactance to negate the inherent inductive reactance of the antenna. I built a switching unit that selected capacitive values matching the selection of stubs for each band. The concept remains viable but attempting to obtain high-quality high-voltage capacitors is becoming more and more difficult. See **Fig 3**, which diagrams the stub positions I used for a 30, 40 and 80-meter triband folded monopole. I used relays to short a stub at the appropriate height for each band.

Another Approach

To attempt modernization of the folded-unipole matching problem, I tried a concept I credit to Ron Nott. SGC and other manufacturers make automatic antenna tuners. Within the range of the selections allowed by these units sufficient capacitance can be achieved to allow seamless QSYing across the bands. I used several models of the SGC tuner to test the functionality of the concept. I continued to use relay-switched stubs for these tests, meaning that the antenna tuner mainly had to tune out the inductive reactive at the feed point.

It appears that a single stub at the middle stub height can indeed allow the matching unit to match several bands without having to switch stubs. The SGC tuner handled this situation nicely, although it left me somewhat uneasy—It seemed that the tuner was doing most of the hard work, not the folded unipole.

I will continue to work on simplifying the switching problems of multiple-band use of a single unipole. Stay tuned!

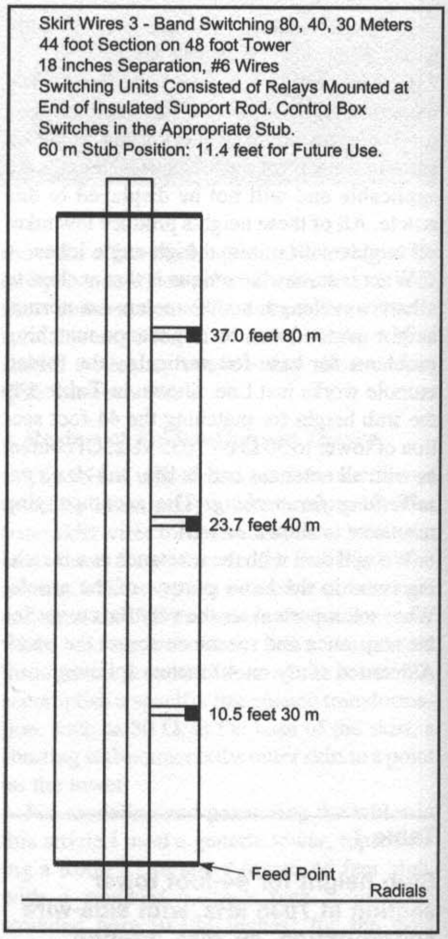

Fig 3—Shorting stubs for 30/40/80-meter operation. This system uses relays to switch in stubs at appropriate heights.

Notes and References

[1] R. Nott, K5YNR, "Unipole Antennas—Theory and Practical Applications," *The ARRL Antenna Compendium, Vol 2* (Newington: ARRL, 1989), pp 36-37.

[2] Rackley, R.D. et al, "An Efficiency Comparison: AM/Medium Wave Series Fed vs. Skirt Fed Radiators," **http://www.dlr.com/dlrweb/papers/nabpaper/nabpaper.htm**.

[3] Sylvio M. Damiani, PE, "The Self Resonant Folded Unipole Antenna," *BE Radio*, Oct 1999, p 30-38. See **http://beradio.com/ar/radio_selfresonant_folded_unipole/index.htm**.

Some More VE7CA 2-Element Portable Yagis

By Markus Hansen, VE7CA
674 St Ives Cres
North Vancouver, BC
V7N 2X3 Canada
e-mail: **ve7ca@rac.ca**

VE7CA follows up on his very popular 2-element portable Yagi design with a WARC-band tribander and 40-meter coverage.

The November 2001 issue of *QST* featured a triband portable Yagi I developed to use as a temporary antenna at our summer home. I designed it specifically for easy assembly and disassembly, as well as being small enough to fit in our car's ski boot.

Many living in warmer climates may not even know what a ski boot is. It is a synthetic sleeve that is located between the two rear seats of a passenger vehicle and accessed from the trunk. It is just long enough to fit two pairs of skis into the car without having to use a rooftop carrier. A ski boot can be used to carry ham-radio antennas as well. The limiting factor is that the sleeve is typically only about 7 feet long.

My portable triband Yagi uses wire elements spaced apart with two wooden booms (spreaders) on either end. Most often I hang the antenna from a single support—a tall tree—therefore you could refer to it as a *Sloping Wire Yagi*.

After the article was published, I received many e-mails asking a variety of questions about the antenna, or informing me that they were going to build (or had already built) the portable triband Yagi. There were specific questions about the hairpin match, the V slings, and the design process I used to develop the antenna. However, the most often-requested information was for dimensions for 40 meters and for the WARC bands. The purpose of this article is to address these questions.

The Design Process

In my original design I wanted an antenna for 10, 15 and 20 meters that could be stored in the ski boot of my car, so I was limited to a maximum spacing between the 20-meter driven element and the reflector of just under 7 feet. I used an antenna-modeling program called *AO*, which stands for *Antenna Optimizer*. I originally used a dimension for the driven element based on the standard formula for a 20-meter dipole, 472/frequency (MHz) = 33.5 feet. For the reflector I added 5% to the driven element length.

I then instructed *AO* to optimize the 2-element Yagi by adjusting the length of the reflector only for the best front-to-back ratio at 14.1 MHz, keeping the spacing between the driven element and reflector fixed at 7 feet. I used the same methodology to generate dimensions for 15 and 10 meters. When I built the antenna, I hung the 15-meter driven element 9 cm (3.5 inches) below the 20-meter dipole and the 10-meter dipole below the 15-meter dipole by the same distance. I held the wires apart with ½ PVC pipe purchased from a plumbing store.

By playing with the reflector-to-driven element spacing and the initial driven-element lengths I was able to come up with a feed-point impedance on each band that allowed the use of a single setting for the shorting bar on the hairpin match. I thus shortened all three driven elements by about 1.5% and then joined them together at the center insulator. The result was a very acceptable match over the lower portions of each band. The layout of the 10, 15 and 20-meter triband wire Yagi is shown in **Fig 1**, with the dimensions provided in **Table 1**.

The dimensions shown in Table 1 are what resulted after tuning for the lowest SWR in the middle of the lower portion of each band. I hung one end of the antenna from a tree and sloped it downwards at 45°, tying the lower end to a peg in the ground. The height at the feed point was 30 feet.

The feed-point impedance of an antenna is affected by many environmental factors. The presence of a reflector relatively close to the driven element has a major effect, since the impedance at the driven element in a Yagi is affected by the tuning of the driven element itself, by the spacing and length of the reflector element and to a lesser extent the height of the antenna above ground and the character of the soil itself. The real challenge in a multiband Yagi with a single feed line is to obtain a low SWR on all the bands.

The hairpin match is one of the easiest matching systems to make. It is easy to adjust and since wire is the only ingredient, it can be coiled up with the rest of the antenna when the antenna is disassembled. The feed-point impedance of the Yagi with a reflector element spaced $0.1\ \lambda$ behind the driven element typically produces a resistance around $20\ \Omega$. By shortening the driven element from its resonant length, capacitive reactance is added to the feed-point resistance. This can be cancelled by shunting the feed point with an inductor in the shape of a wire loop resembling a *hairpin*. This causes a step up of the $20\text{-}\Omega$ feed-point resistance to $50\ \Omega$.

There are several software programs that can be used to determine the dimensions of a hairpin match, such as *BETA.EXE* by N6BV. [The hairpin match is also called a

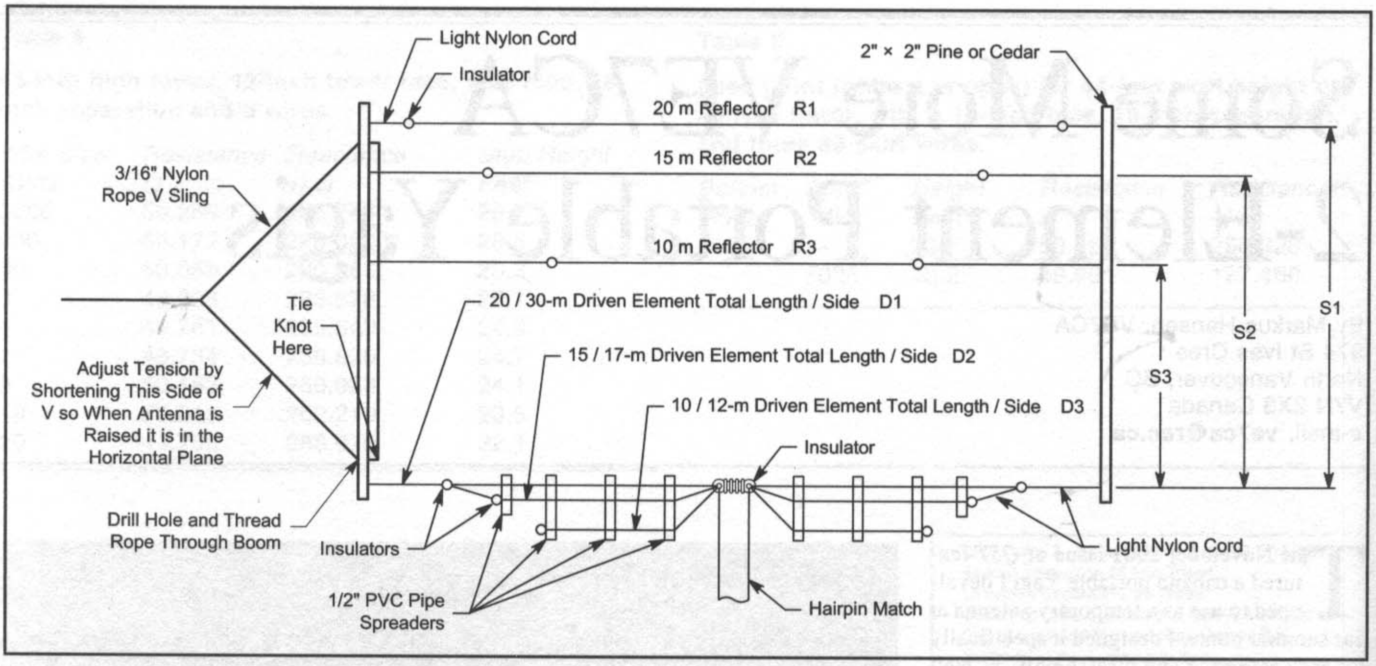

Fig 1—Dimensions for VE7CA's 2-element triband Yagi.

Table 1
Dimensions for 20/15/10-Meter Tribander

Frequency MHz MHz	*Spacing DE to Refl cm (feet)*	*Driven Element Half Length cm (feet)*	*Reflector Length cm (feet)*	*Hairpin Length cm (inches)*
14.1	213 (6.99)	488 (16.01)	1065 (34.94)	43 (14.9)
21.1	175 (5.74)	335 (10.99)	708 (23.23)	
28.25	125 (4.1)	254 (8.33)	531 (17.42)	

Spacing between hairpin wires is 10 cm (4 inches).

"beta" match by HyGain. *BETA.EXE* is included with the software/data for *The ARRL Antenna Compendium, Vol 7* at **http://www.arrl.org/notes8608**. For more details of the theory behind a hairpin/beta match, see Chapter 26 of the 19th Edition of *The ARRL Antenna Book.—Ed.*] To be able to use a single dimension for the hairpin match, I juggled the lengths of the driven elements and the distances between the driven elements and the reflectors in my computer model so that the resultant feed-point impedance on each band could be transformed to 50 Ω.

Adding the WARC Bands

When I attempted to add 17 and 12 meters elements to the existing 20/15/10-meter Yagi I became exasperated. Adding two more driven elements and reflectors brings many more variables into the equation! Working with my antenna-modeling program, it became clear that there was serious interaction between the elements. I could not obtain a workable feed-point impedance on all five bands that could be transformed to 50 Ω using a single hairpin match. There was also serious pattern distortion on 12 meters.

Even building a WARC-only triband Yagi turned out to be a real challenge. I had difficulty finding a combination that would allow me to use a single matching system to transform the feed-point impedance of the combined driven elements to 50 Ω. I couldn't create a 30/17/12 triband Yagi using the same design principles as my 20/15/10-meter version. The main problem occurred on 12 meters. Not only was the feed-point impedance unmanageable, but the radiation pattern had four lobes, not the single lobe you'd like from a Yagi.

My next modeling approach was to hang a single 17/12-meter trap dipole below the 30-meter driven element and tie the feed points together for a common feed. Again, I ran into the same problems. It became obvious that there was serious interaction between the 12-meter driven element and the other elements.

Not being one to give up easily, I considered several other methods for multibanding an antenna system. I decided to try the *Modified Coaxial-Sleeve* method, more aptly termed by K9AY the *Coupled-Resonator (C-R)*.[1] This method uses a single driven element, with other elements placed in very close proximity (but not physically connected) to the driven element. By starting with the dimensions suggested by K9AY for a triband 30/17/12-meter dipole I was able to develop a Yagi with acceptable feed-point impedances on all three bands using a single hairpin match. Notice that this WARC design uses a 2 × 2-inch wooden boom length that is 230 cm (7.5 feet) long. Now the antenna won't fit into my ski boot, so I must resort to putting it on the roof rack.

The space between the tightly coupled driven elements is only 3.7 cm (1.5 inches), so you need to use more PVC pipe spreaders than in the 20/15/15 design to make sure the driven-element wires stay as close as possible to the desired spacing without physically touching each other. The driven elements lie in the horizontal plane and the hairpin match and feed line hang down vertically from the center of the 30-meter driven element.

The spacing between the 30-meter driven elements and the other two conductors and the size of the wire all played a part in developing this antenna for a single feed line with the common hairpin match. Do not change the wire size from the recommended #14 for the driven elements unless you are willing to spend a considerable amount of time with a *NEC*-based modeling program retweaking the antenna! This is not the case with the 20/15/15 tri-band Yagi, where any convenient sized wire is acceptable.

Using #14 gauge wire allows all the Yagi antennas in this article to be used at the maximum power levels allowed in North America. The only limiting factor is the power handling capability of the feed line. However, even RG-58 should work for the relatively short length from the feed point down to ground level, where you can change to RG-8 or some other higher-power, lower-loss coaxial cable if you wish. **Fig 2** is a detailed drawing of the 30/17/12-meter driven element. The other dimensions for the 30/17/12-meter triband Yagi are shown in Fig 1 and **Table 2**.

Assembly

When you are ready to assemble your Yagi, start by attaching the longest reflector element and the driven element assembly to the wood end booms. Do this with the wires and the booms on the ground. Next attach the V slings to both of the booms and with ropes attached to the V slings pull the array up off the ground between two supports (perhaps two trees). A height of 1.5 meters (5 feet) above the ground makes it easy to work on the antenna while you add the other reflector elements and adjust the V slings. Pull them tight so that the array is fairly flat. It won't stay horizontal, because the driven elements are heavier than a single reflector element. So you will need to support the 2×2-inch spreaders so they are horizontal. Lean the booms on something at a convenient height, such as the rungs of two step ladders. Now add the two other reflector elements, but don't pull them as tight as the longest reflector. Next attach the feed line.

V Slings

Since I wanted to be able to raise the 30/17/12-meter triband antenna by myself, I again used only one rope on either end of the array. One end goes over a tree limb and the other end is tied to a stake in the ground or some other nearby support, perhaps a tree trunk. Using only one attachment rope on either end makes it very easy to change beam direction by walking the antenna around the antenna support tree or tower. To accomplish this I used two V slings, one on each end attached to the 2×2-inch spreaders.

The secret to keeping the antenna level in the horizontal plane is that the V slings are not equilateral in shape. The combined weight of driven elements, balun and feed line is heavier than the reflectors. If the length of the sides of the V are equal, the array will rotate downwards. The driven elements will end up facing the ground, with the reflectors facing up. Adjust the V slings so that the antenna will stay level in the horizontal plane by shortening the length of the side of the V attached to the driven elements. It is quite easy to adjust in the field, and once you have it adjusted it stays balanced.

Once you raise the antenna to its operating position and in the horizontal plane, you can change direction 180° by pulling on the feed line. As you pull, the whole array will slowly turn over. Stop it from turning by holding onto the feed line once the array has swung over to face the opposite direction.

The Balun

In the original *QST* article, I was a little unclear describing the coil of coax at the feed point, so I've redrawn it in **Fig 3**. You should let the coax drop straight down from the center insulator and attach it to the center of the hair-pin shorting bar. Continue by making a coil using the coax of 6 to 8 turns, with a diameter of about 4 inches. This balun will choke off RF flowing along the outside of the coax shield that would otherwise distort the radiation pattern of the antenna. The center of the shorting bar is at a neutral potential, so there is no harm in attaching the coax feed line at that point.

SWR Adjustment

Since you may situate your antenna in an entirely different position than I did, you may need to fine tune your antenna. Begin with the dimensions in Table 2 as a starting pint. Make a temporary shorting bar using two alligator clips joined by a piece of wire and attach them at the recommended position. Next raise the antenna to the desired final position. Using an antenna analyzer (or transmitter and SWR meter) plot the SWR over all three bands. Start with the lowest band, 30 meters and adjust the shorting bar up or down to find the lowest SWR point in the portion of the band you plan to operate in. (This procedure holds if

Table 2
Dimensions for 30/17/12-Meter Tribander

Frequency MHz MHz	*Spacing DE to Refl cm (feet)*	*Driven Element Length cm (feet)*	*Reflector Length cm (feet)*	*Hairpin Length cm (inches)*
10.12	230 (7.5)	713 (23.4) Half	1476 (48.4)	24.5 (9.5)
18.11	165 (5.4)	808 (26.5)	822 (27.0)	
24.91	120 (3.9)	570 (18.7)	606 (19.9)	

Spacing between hairpin wires is 10 cm (4 inches). Note that dimensions for 17 and 12-meter driven elements are full lengths, since they are not broken with insulator in the middle, unlike all driven elements for 20/15/10-meter triband design in Table 1.

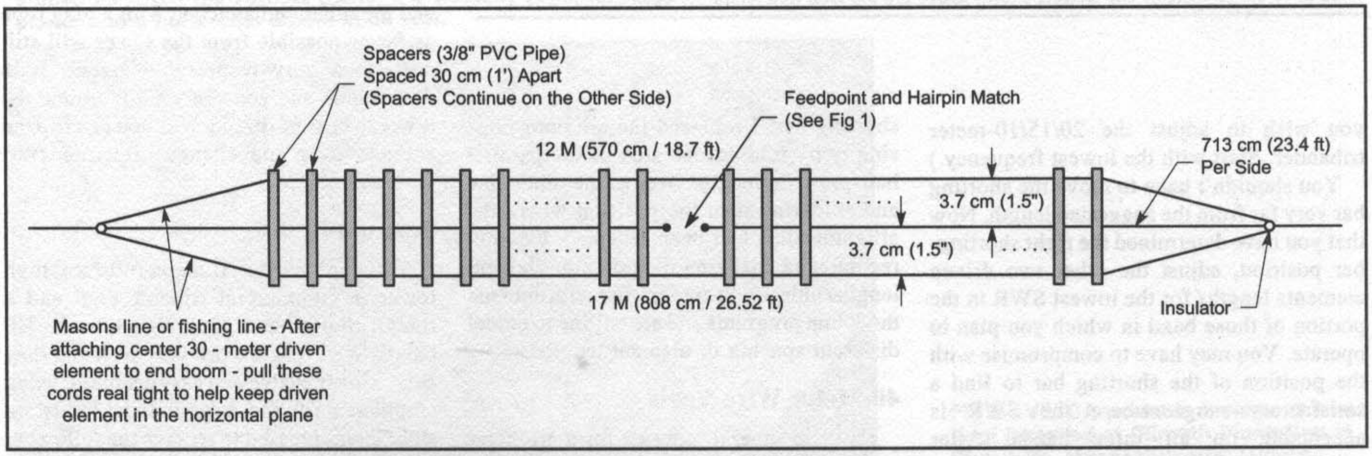

Fig 2—Layout of 30-meter driven element with coupled resonators for 17 and 12 meters.

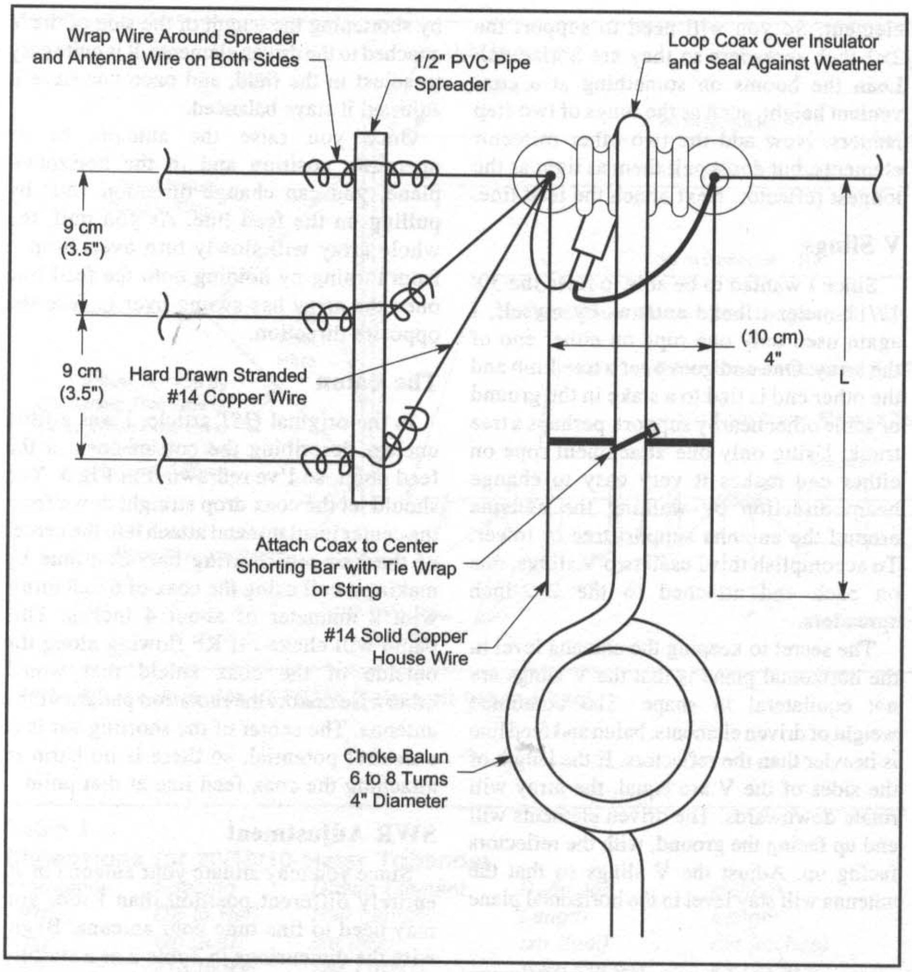

Fig 3—Details of feed point for 20/15/10-meter triband Yagi. The same mechanical support is provided for the balun and feed coax for the 30/17/12-meter tribander.

Table 3
40-Meter Wire Yagi Configurations

Configuration cm (feet)	*Driven Element cm (feet)*	*Reflector cm (feet)*	*Hairpin Length*
1. Horizontal	1978 (64.90)	2098 (68.83)	Approx 50 cm (22 inches)
2. –30° Sloper	1978 (64.90)	2113 (69.32)	
3. –65° Sloper	1978 (64.90)	2101 (68.93)	
4. Inverted V	2040 (66.93)	2126 (69.75)	

Spacing between driven element and reflector is 427 cm (14 feet). Spacing between parallel hairpin wires is 10 cm (4 inches). The lengths shown above are the total wire length for each element.

you wish to adjust the 20/15/10-meter tribander. Start with the lowest frequency.)

You shouldn't have to move the shorting bar very far from the suggested length. Now that you have determined the right shorting-bar position, adjust the other two driven elements lengths for the lowest SWR in the portion of those band in which you plan to operate. You may have to compromise with the position of the shorting bar to find a satisfactory range where the SWR is acceptable on all three bands. After satisfying myself with the position of the shorting bar, I replaced the alligator clips simply by folding one side of the parallel hair-pin wire lengths over to the other side and soldering it in the position where the alligator clips had been attached. I do not recommend changing the reflector element lengths unless you are familiar with antenna modeling programs and are willing to model different spacing or element lengths.

40-Meter Wire Yagis

I've had several requests for a 40-meter wire Yagi. One ham mentioned that he wanted to be able to pull up a 40-meter Yagi between two towers and be able to flip it over to change direction. Another wanted a 40-meter Yagi he could pull up on a single tower for the winter DX contests and then put it away during the summer. I ran four different 40-meter scenarios in my computer models:

1. A horizontal 2-element wire Yagi at 65 feet.
2. A sloping 2-element wire Yagi, with one end at 65 feet and sloping downward 30° from vertical.
3. A sloping 2-element wire Yagi, with one end at 65 feet and sloping downward 65° from vertical.
4. An inverted-V 2-element wire Yagi with the apex at 65 feet and an included angle between the wires of 120°.

Fig 4 shows the layout for an inverted-V system and **Table 3** lists the element and hairpin lengths. Elevation patterns for the 40-meter antennas are compared in **Fig 5**, with a reference antenna of a single flattop dipole at 65 feet. As they say, a picture is worth a thousand words. If your interest is DX, it is very clear that horizontal and high is a very good rule of thumb for most antennas.

Yes, a ¼-wave vertical over salt water or 120 ¼-wave radials will produce very low radiation angles, but they are not exactly portable and we don't all live near the ocean. Mind you, if you can locate antenna Number 3, the most vertically oriented wire Yagi, next to the ocean the story would be very different.

The point here is that if you have two towers and you're not fortunate enough to be located on a saltwater marsh, you should pull the array up as high and as horizontal as you can. If you have only one tower and don't need to change direction often, then try the inverted-V configuration. You can still change the direction by walking each end around the tower.

However, even the sloping 40-meter Yagi with one end at 65 feet up a tower (or tree) and the other end attached with a long rope as far as possible from the tower will still put out a very respectable signal. It is directional, and you can walk it around the tower to change direction or you can flip the antenna over and change direction 180° very quickly.

Summary

You don't need a 10-meter (60-foot) high tower, a commercial triband Yagi and a rotator to put out a good signal on the HF bands. Wire Yagis work very well and they can be inexpensive and easy-to-build, using components found at your local hardware store. I was pleased to receive the following testimonial:

N1WWI, Chris, W5IRW, Jim and K1HTN, Bruce, constructed the Portable 2-Element Triband Yagi featured in the November 2001 issue of *QST*. We installed it this past weekend at Plimoth Plantation at Plymouth, MA, for our yearly Special Event Station WA1NPO that we set up on the Saturday/Sunday right after Thanksgiving and the last weekend that the Plantation is open before winter.

Our operation started Saturday morning at 0900 and despite the very poor 20 meter band and nothing on 15 and 10 due to the solar eruption we had many QSOs, all with glowing signal reports. On Sunday the band was in much better shape and we had a 5-hour pile up on our frequency. Its performance far exceeded our expectations.

It worked out pretty well with the Hairpin match. When we put the MFJ analyzer on it in the air and it was not that high up, it showed 1.2/1 at 14.2, 1.3/1 at 21.250 and 1.1/1 at 28.4.We almost didn't believe the analyzer. Hi Hi. 73s...Bruce Beaman, K1HTN.

The photo in **Fig 6** by Bruce, K1HTN, shows the 20/1515 Triband Yagi installed over the Hornblower House at Plimoth Plantation.

NOTES

Gary Breed, K9AY, "The Coupled-Resonator Principle: A Flexible Method for Multiband Antennas," *The ARRL Antenna Compendium, Vol 5*, p 109.

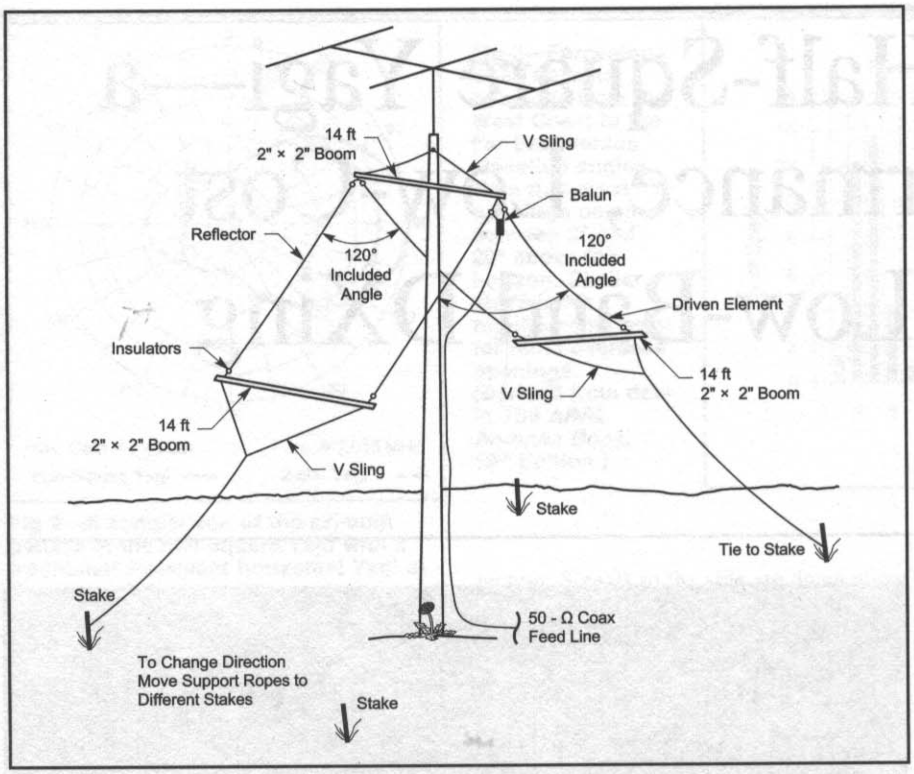

Fig 4—Layout for inverted-V 40-meter portable wire Yagi suspended from tower.

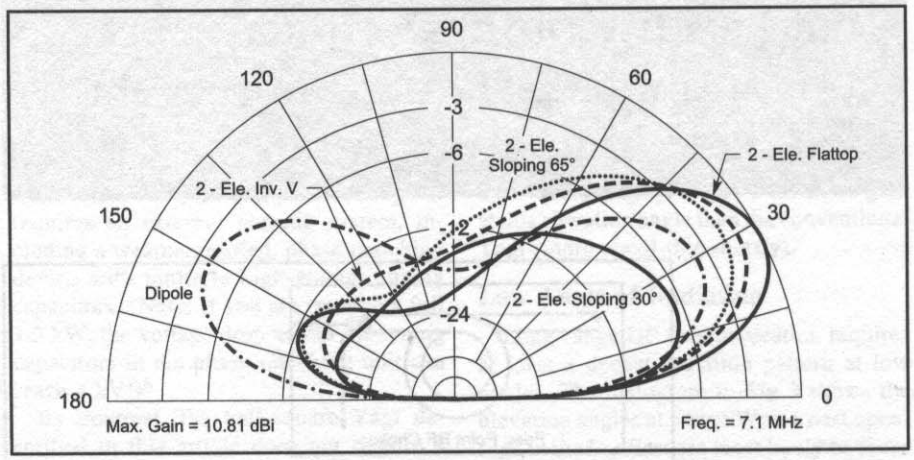

Fig 5—Comparisons of elevation patterns for five 40-meter antennas: a 2-element flattop Yagi at 65 feet; a 2-element inverted-V Yagi at 65 feet; a 2-element Yagi sloped 65° from the vertical plane; a 2-element Yagi sloped 30° from the vertical plane; and a horizontal dipole at 65 feet.

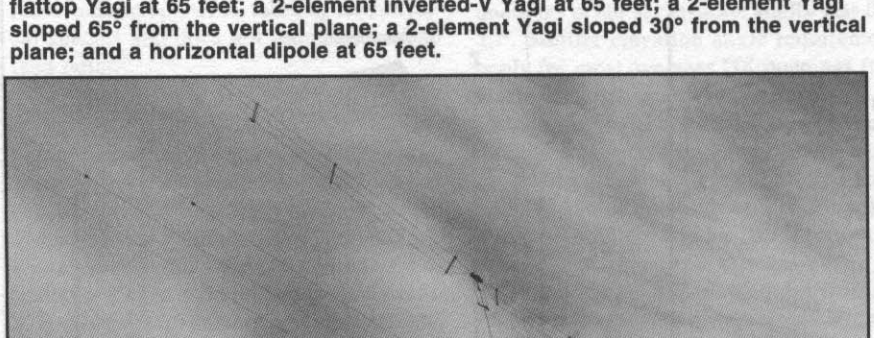

Fig 6—VE7CA portable 2-element wire Yagi installed at Plimoth Plantation in Plymouth, Massachusetts. (*Photo courtesy K1HTN.*)

The K6EI Half-Square Yagi—a High-Performance, Low-Cost Design for Low-Band DXing

By Jim Peterson, K6EI
438 E. Ferndale Ave
Sunnyvale, CA 94085
E-mail: **K6EI@arrl.net**

Sunspot numbers are dropping and it's time to start thinking about low-band DXing. Here's a simple, inexpensive design for 40 meters that handily outperforms a conventional 2-element horizontally polarized Yagi at moderate heights.

Predawn radio contacts across the Pacific on the low bands are a real kick. The ideal antenna for this kind of activity, however, requires a low angle of radiation, as well as solid front-to-rear and front-to-side ratios to minimize QRM. This can be especially true on 40 meters, where the interference from European broadcast stations can be severe.

This article describes a design that meets all these requirements by combining a half-square radiator with a parasitic reflector. The result is the half-square Yagi—an inexpensive vertically polarized antenna that requires no external phase-matching units or radial system, out-performs a conventional Yagi mounted at moderate heights, and can be strung up between trees in a typical suburban backyard.

The Traditional Half Square

The conventional half-square has been popular for over half a century,[1,2] and is equivalent to the antenna in **Fig 1**, minus the reflector. The half-square consists of two λ/4 vertical wires, spaced λ/2 apart and fed in-phase by the top wire. A half square is vertically polarized—the horizontal wire has minimal impact on the antenna's far-field radiation pattern, since the currents on the left and right portions are 180° out of phase. A standard half-square produces a bidirectional pattern (perpendicular to the plane of the antenna), with a gain of about 3 dB relative to a single λ/4 vertical.[3] The feed point is typically at an upper corner, using coaxial cable (ie, current-fed at a low-impedance point), or the feed point is impedance-matched and fed at the base of one of the vertical wires.

Unlike base-mounted λ/4 verticals, the half-square requires no radials. And since the current maxima (the portions of the antenna that do most of the radiating) are up high, absorption by surrounding buildings

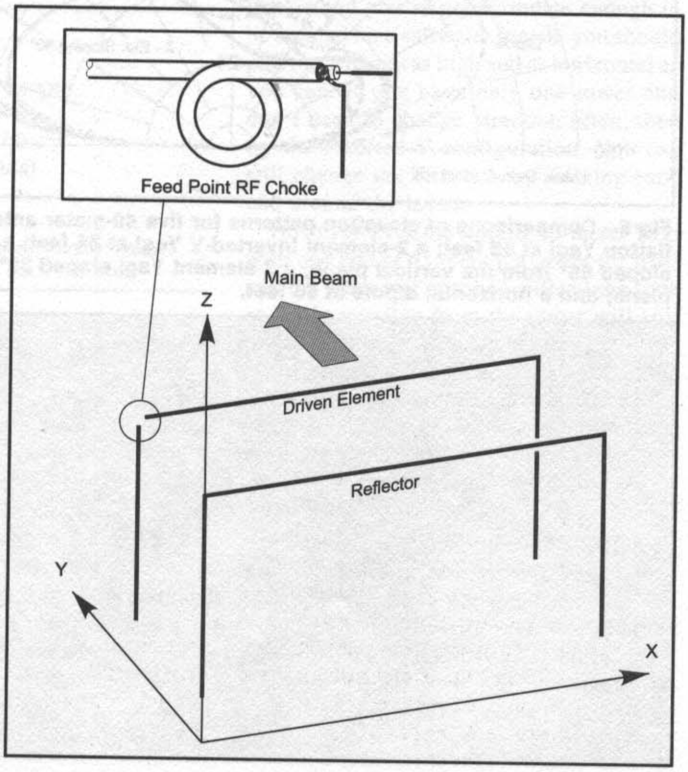

Fig 1—The half-square Yagi.

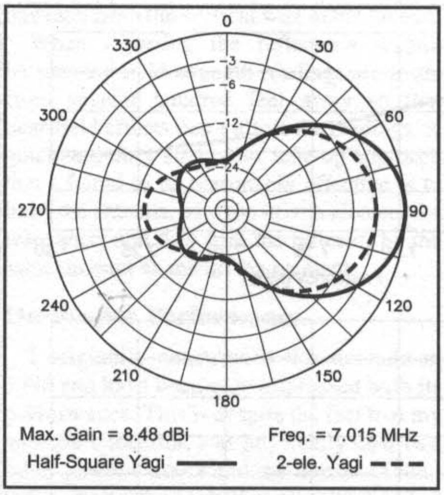

Fig 2—A comparison of the azimuth pattern of the half-square Yagi with a traditional 2-element horizontal Yagi at the same 45-foot height.

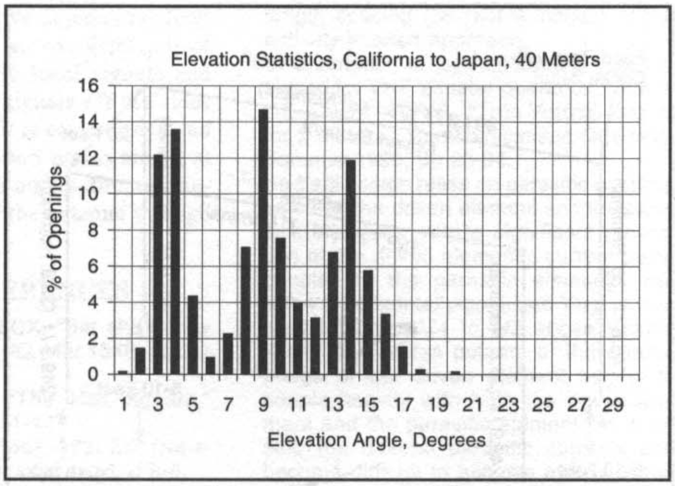

Fig 3—Percentage of all 40-meter openings from the West Coast to the Far East versus elevation angles. Note that most openings occur between 2° and 20° above the horizon. Similar elevation requirements exist for most overseas openings. (Derived from data in *The ARRL Antenna Book*, 19th Edition.)

and other structures is minimized—with reduced RF exposure to neighbors, family members and the radio operator.

Improving on a Good Idea

A few years ago in QST[4,5] Paul Del Negro, N2PD, described an innovative method of achieving a unidirectional pattern using two identical half-square elements, spaced λ/4 apart and fed 90° out of phase, to create gain and a null to the rear. While N2PD's elegant design performs well, it has one practical shortcoming—it requires an external phasing system, including a weatherproofed, phase-matching device with multiple high-voltage tuning capacitors. (Note: If you are running a full 1.5 kW, the voltage drop across the tuning capacitors in the phase-matching unit can reach 4 kV!)[6]

By contrast, the half-square Yagi described in this article does not require a phase-matching device. It produces comparable radiation patterns, takes up less physical space,[7] and does not require a second feed point.[8]

Excellent Front-to-Rear Ratio

Interference has been a challenge to radio amateurs since the beginning of the hobby. A common remedy (especially on the upper HF bands) is to use a horizontally polarized Yagi. Unfortunately, this approach has a series of limitations when attempted on the low bands. A low-band Yagi is large and cumbersome, and getting one more than a fraction of a wavelength above the ground is difficult and costly on 40 or 80 meters. And at low heights, near-field effects can severely degrade the front-to-side radiation pattern.[9,10]

The half-square Yagi provides excellent front-to-rear and front-to-side signal rejection. Signals to the side are down about 23 dB, while the signal suppression to the entire rear quadrant is consistently better than 25 dB. Forward gain at the center frequency is 9 dBi with a 3-dB beamwidth of 60°. **Fig 2** compares the azimuth pattern at a 15° elevation angle for a half-square Yagi up 45 feet (ie, with the bottoms of the vertical wires about 10 feet off the ground) with the pattern of a conventional 2-element horizontally polarized Yagi at the same 45-foot height. The most significant difference in this plot is that the half-square Yagi provides a full 15 dB more rear-quadrant suppression than does the horizontally polarized 2-element Yagi. In addition, the half-square Yagi provides 3 dB more gain at this elevation angle than the conventional Yagi (more about this shortly).

Low Angle of Radiation

Long-range HF communication requires at least a decent radiation pattern at low angles. The histogram in **Fig 3** shows the elevation angles at which West Coast openings to the Far East are most likely to occur at 7 MHz. For this propagation path, all openings occur at elevation angles less than 20°. Similar elevation angle requirements apply for most overseas DX openings from North America on 40 meters, whether for Europe, Africa or the South Pacific.

This low elevation-angle requirement presents a major challenge for horizontally polarized antennas. A conventional dipole at 7 MHz would need to be 100 feet high for the center of its main beam to approach a 20° elevation angle. A 2-element horizontally polarized Yagi on 40 meters would likewise need to be up more than 90 feet high. An additional problem for horizontally polarized antennas less than λ/2 above the ground (roughly 65 feet for 7 MHz) is that they have strong response to incoming signals arriving at high elevation angles. This means that the signal strengths of local and regional stations will be enhanced at the expense of the weaker, lower-angle DX signals.

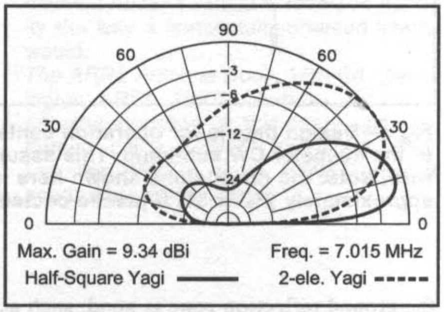

Fig 4—A comparison of the elevation patterns of a 2-element horizontally polarized Yagi at 45 feet with a half-square Yagi mounted with the horizontal wires at the same 45-foot height.

Fig 4 compares the elevation pattern for the half-square Yagi with that of a conventional 2-element horizontally polarized Yagi at the same 45-foot height. The main beam of the half-square Yagi is centered at an elevation angle of 15°, with a significant portion of its main lobe extending down to 10°. Compared to a conventional horizontal Yagi at this height, the half-square Yagi provides 2 to 7 dB of signal improvement at elevation angles between 10° and 20°.

A full-sized horizontal Yagi would need to be up 75 feet high to match the half-square Yagi's forward gain at 15°, and would need to be up 125 feet for its main beam to be centered at this elevation angle. (And of course commercial Yagis with low-Q loading coil can suffer even more loss.)

The *NEC* antenna model used for these plots assumes an "average" ground with 5 mS/m conductivity and a dielectric constant of 13.[11] As with all vertically-polarized antennas, the effective radiation angle for the half-square Yagi will be lower at those locations where soil conductivity in

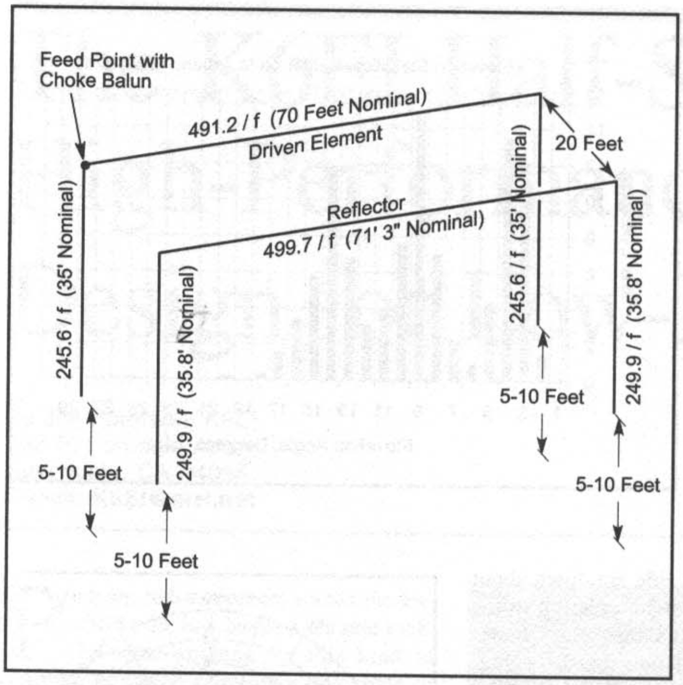

Fig 5—Design details for operation centered near the bottom of the 40-meter CW sub-band. This assumes #14 bare copper wire. Note: the dimensions shown here must be decreased approximately 2% to 3% if plastic-coated wire is used.

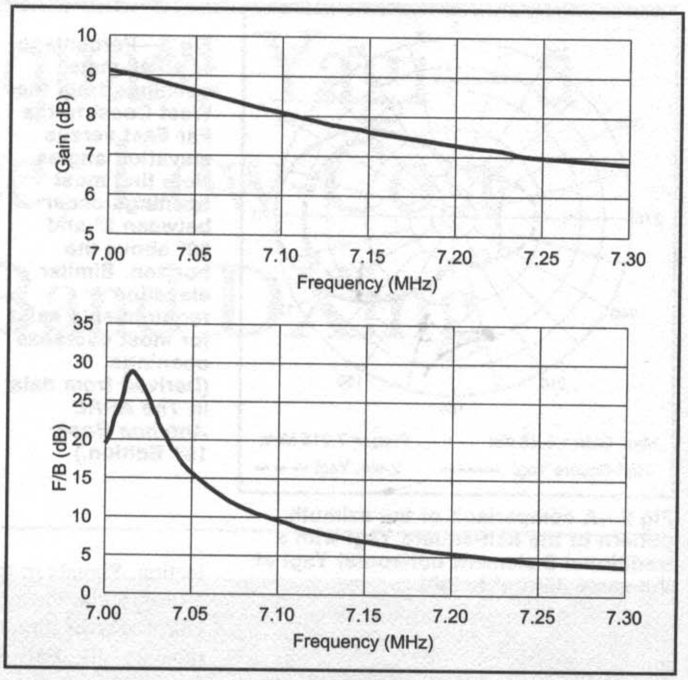

Fig 6—Gain as a function of frequency for the half-square Yagi optimized for the DX portion of the 40-meter CW sub-band.

the ground reflection zone is good, such as many portions of the South and lower Midwest. And of course, a saltwater marsh or beachfront location is ideal!

The half-square presents an input impedance of 49 Ω and an SWR of about 1.1:1 at resonance. If tuned for the center of 40 meters the SWR remains below 2:1 over the entire 300-kHz band. Likewise, its forward gain remains within 1 dB of max-imum over a 200-kHz bandwidth.

Before constructing this antenna, however, it is important that you decide whether it will primarily be for phone or CW/digital operation. This is because the front-to-rear ratio degrades rapidly at frequency ranges greater than 50 kHz from resonance. **Fig 5** summarizes the specific dimensions for operation in the DX portion of the CW sub-band—ie, 7.000 to 7.030 MHz. **Fig 6** shows the gain and front-to-back ratio performance curves across the 40-meter band for this CW design. If the antenna is optimized for the bottom of the CW portion of the band, the pattern deteriorates at 7.3 MHz to a front-to-back ratio of 3 dB, with a drop in forward gain of 2.4 dB. This antenna is indeed best designed for optimum performance in a single sub-band.

Be sure to waterproof the coax at the antenna's feed point to prevent moisture intrusion. As much as possible, route the coax away from the driven element along one of the support ropes so that the feed line does not disturb the beam's pattern. In order to minimize surface currents on the outside of the coax that might degrade the antenna's pattern, use a 1:1 choke balun at the feed point by winding the first 20 feet of feed line into a coil. If you don't want to bother with a coil of coax at the feed point, a ferrite-bead shield-current choke is another good choice.

Another Feed Method

An alternative feed method to the corner-fed current method described above is to voltage-feed the base of one of the vertical wires. Details of this feed method can be found in *The ARRL Antenna Book*. Unfortunately, voltage-feeding a half-square antenna reduces the gain and distorts the antenna's pattern away from the resonant frequency to a much greater extent than the current-fed method described here.

Because the free ends of the antenna are high-impedance points, very high voltages can develop even when operating at relatively low power levels. As a result, you should install the antenna high enough so the ends are above easy reach. And since the E field is strongest near high-voltage points, keeping the ends at least 5 to 10 feet high significantly reduces E field-induced ground losses.

Tune-Up Procedure

Nearby structures, as well as differences in ground characteristics and antenna height, can all cause the optimized dimensions to differ from those listed in Fig 5. Be especially careful about keeping other 40-meter antennas (dipoles, verticals, etc) well away from the half-square Yagi's near field. When I initially installed this antenna, I neglected to dismantle a commercial HF trap vertical that was located in the beam's vicinity. During the half-square Yagi's tune-up process it became apparent that the feed-point impedance was noticeably different from the predicted 49 Ω (implying that the beam's pattern was probably degraded as well.) Removal of the trap vertical from the local area brought the half-square Yagi's impedance close to the predicted level and no doubt improved the beam's pattern significantly. There is merit in making all the initial dimensions a few inches longer than Fig 5 calls for, so that the antenna can be easily pruned for optimum performance.

Assuming the antenna is close to resonance when you start, the best tune-up approach involves alternately trimming the driven element to resonance and then adjusting the ends of the reflector for optimum rear cancellation by way of a calibrated field-strength meter. When pruning the driven element, be aware that since the ¾ wavelength "inverted L" portion of the driven element is three times as long as the vertical wire directly connected to the coax, adjustments in the driven element's length will need to be done with a 3:1 ratio. That is, if you trim one inch from the coax-connected vertical wire, trim two inches from the driven element's horizontal wire and one inch from the vertical wire at the far end.

When adjusting the reflector's length, be sure the field-strength readings are made from several hundred feet away so that near-field effects don't affect the readings. A quick-and-dirty alternative tune-up approach that I found to be reasonably effective is to hoist the antenna, trim the driven element for resonance, and then trim the reflector by the same amount as the driven element.

On-the-Air Performance

I originally constructed this antenna in 1996 and have been very impressed with its performance. This is despite the fact that my antenna's location was physically near two other antenna masts and my house. I found it did an excellent job of reducing noise and interfering signals from unwanted directions and gave me a good signal to the west where it was pointed. During the first month after installation, I made 90 early morning Far East contacts on 40 meters and had a blast doing it!

Conclusion

The half-square Yagi is a simple, low-cost and highly effective antenna for low-band DXing. It does an excellent job of suppressing high-angle local signals and low-angle interfering signals off the sides and rear. In addition, it is easy to feed and install. The upper support points are all at low impedance, which makes directly running these portions of the antenna through trees an option.

NOTES AND REFERENCES

[1] Woodrow Smith, W6BCX, "Bet My Money on a Bobtail Beam," *CQ*, Mar 1948, pp 21-23, 92.

[2] Ben Vester, K3BC, "The Half Square," *QST*, Mar 1974, pp 11-14.

[3] *The ARRL Antenna Book*, 17th Ed. (Newington: ARRL, 1994), Chapter 8, p 8-6.

[4] Paul Del Negro, N2PD, "A Half-Square Array for 40 Meters," *QST*, Jan 1998, pp 46-49.

[5] Feedback on "A Half-Square Array for 40 Meters," *QST*, Feb 1998, p 72.

[6] Rudy Severns, N6LF, "Using the Half-Square Antenna for Low-Band DXing", *The ARRL Antenna Compendium, Vol 5*, pp 35-42 (Newington: ARRL, 1996).

[7] The physical separation distance between the driven element and reflector in the half-square Yagi is about 45% less (ie, 20-foot spacing) than with the quarter-wave-length spacing (35 feet 9 inches) of the actively-phased approach.

[8] For a variation of the half-square Yagi designed for VHF 2-meter operation, refer to L.B. Cebik, W4RNL, "True Vertical Beams for 2 Meters," *Communications Quarterly*, Summer 1999, pp 25-34.

[9] The Yagi design relies on parasitic coupling between the driven element and the parasitic elements, with a significant proportion of the driven element's current being coupled to the parasitic elements. But when a horizontally-polarized Yagi is lowered to about $\lambda/4$ to $\lambda/2$ above ground level, the reverse polarity of the ground image of the driven element begins to couple heavily with both the driven element and the parasitic element. As a result, the desired parasitic currents can become difficult to achieve at any useful spacing. This effect is substantially less when vertical polarization is used, since the vertically-oriented image of the driven element doesn't exhibit a reversed polarity the way a horizontally-oriented image would.

[10] *The ARRL Antenna Book*, 18th Ed. (Newington: ARRL, 1997), Chap 3.

[11] Antenna modeling for this paper was performed using *EZNEC* Version 2. Roy Lewallen, W7EL, wrote *EZNEC*. **http://eznec.com/eznec.htm.**

Bidirectional Receiving Antennas

By Thomas Russell, N4KG
29836 Country Ln
Harvest, AL 35749

N4KG describes the case for using unterminated, bidirectional Beverages.

After my accommodating neighbor to the west sold off part of his property, I had to remove my Beverages for JA, VK and ZL. For a while, I merely listened off the rear of my NE, E and SSE Beverages, but I always wondered if I was losing some gain off the back of these unterminated Beverages.

Long-Wire Analogy

If a long-wire antenna is fed from one end (or current-fed ¼ λ from one end), the pattern is asymmetrical, with more gain off the far end than the fed end. However, if a long-wire antenna is current-fed from the middle, assuming the wire is an odd multiple of ½ λ, the pattern is symmetrical off both ends. Unfortunately, this approach can only be applied on odd harmonics of the fundamental frequency.

Multiband Solution

There is a less well-known method of feeding long-wire antennas on *even* harmonics. Several articles have been written about off-center-fed (OCF) long wires with the feed point placed ⅓ of the length from one end. This results in a feed impedance just under 300 Ω at the fundamental ½-λ frequency and all even harmonics.

I decided to implement this approach to cover 160, 80 and 40 meters. Since my 500-foot long Beverages performed well on all three bands, I chose to use a wire that was 1 λ long on 160 meters (≈ 540 feet).

Performance

Since my property is roughly 300 feet east-to-west and 540 feet north-to-south, I was able to place two of these Beverages 8-10 feet high, with headings of 30/210°, and 150/330°. DX signals compare favorably with end-fed Beverages to the south southeast and northeast and appear to be 3 to 6 dB stronger than signals off the back of the unterminated Beverages. In spite of the bidirectional pattern, atmospheric noise drops noticeably and received S/N is enhanced. I have been extremely pleased with the resulting performance.

Since this sort of antenna is series-fed along the wire, *no* ground rods or radials are required, making it an ideal candidate for temporary or clandestine installations—such as DXpeditions or night-time deployment in the neighborhood. Three of these antennas at 60° intervals would provide 360° coverage. Two of them, carefully placed, would cover most of the DX world of interest.

Matching

I employed a bifilar 6:1 (300 to 50 Ω) matching transformer, wound on a high-permeability ferrite toroidal core 1 inch in diameter. This consisted of a 15-turn secondary connected in series with the antenna wires and a 6-turn primary connected to the coax.

My Beverages used insulated #14 soft-drawn copper wire trimmed to 175 feet at the feed point, with the other side 350 feet long. See **Fig 1**. I advise people to trim their off-center-fed wires for their desired frequency range, always maintaining a 2:1 length ratio for the two sides. **Table 1** shows the feed impedances I measured using an MFJ-259B.

Single-Band Solution

Since my bidirectional wires are oriented for 30°/210° and 150°/330°, a third antenna favoring 90°/270° would be useful. Unfortunately, my property is only 300-feet wide at the north end and 400 feet at the south end. A single-band solution for 80 meters would be a 3/2 λ center-fed wire (≈ 420 feet). Such a wire should present a feed impedance around 150 Ω. A 430-foot wire (215 + 215 feet) with a 3:1 bifilar-wound matching transformer measured 52 Ω, with 5-Ω reactance at 3.42 MHz.

Conclusion

When thunderstorms approach from the south, there is no question that a terminated Beverage to the northeast or northwest would be quieter. But if real estate is limited or if you want a simple but effective improvement in low-band receiving capability, a bi-directional receiving antenna may just meet that need.

Table 1
Measured feed-point impedances for 175/350-foot OCF Beverage

MHz	*R*	*X (Sign Unspecified)*
1.7	37	10
3.44	48	6
7.0	73	14
13.94	67	12

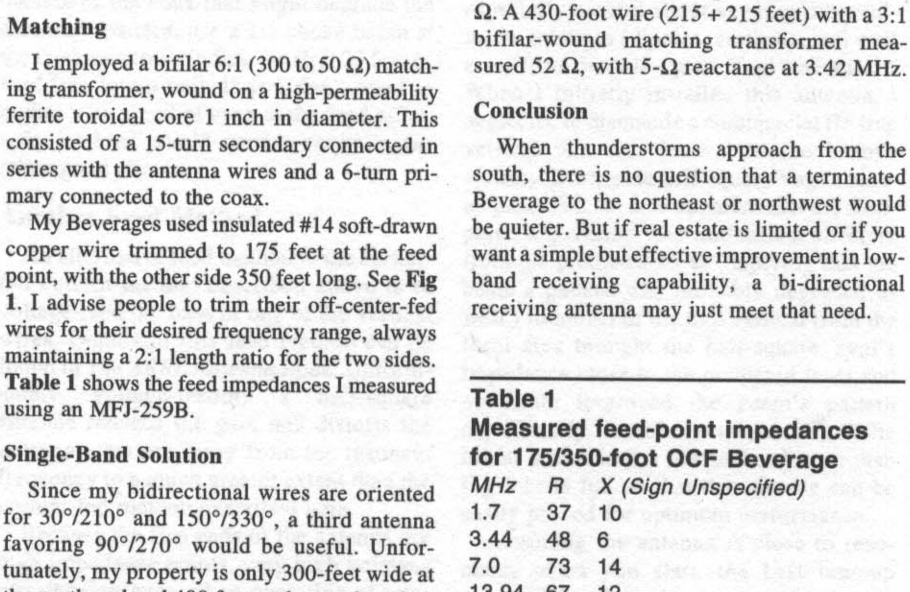

Fig 1—N4KG's birectional OCF Beverage.

Dual-Fed Long-Wire Antenna

By Howard F. Shepherd, Jr, W6US
1781 Sunningdale Rd 48L
Seal Beach, CA 90740
E-mail: **s.howchris@verizon.net**

W6US describes the DFLW antenna.

Hams have been using "long wire" antennas for a long time. A typical length of one wavelength is commonly encountered on the HF bands, where the antenna can be fed in one of three methods:

- Fed at the end, in a Zepp configuration.
- Fed as a center-fed dipole.
- Fed one-quarter wavelength from an end.

Fig 1 diagrams these three methods of feeding a long wire. For an antenna that is one wavelength long, the first two modes give a four-lobed azimuth pattern, as shown in **Fig 2**. The center-fed mode (which is also referred to as two half waves in phase) produces just two azimuthal lobes, also shown for comparison in Fig 2. You could argue that a one-wavelength center-fed dipole is not a true long wire, but rather is two collinear half-wave long radiators fed in the middle to form a beam. The center-fed version allows for multi-band operation if fed with loss-loss transmission line and gives a multi-lobed radiation pattern at frequencies higher than the fundamental.

In the rest of this article, I will use a 28.5-MHz radiator that is 137.5 feet long, elevated 30 feet above the earth. This antenna is 4 λ long at 28.5 MHz, qualifying it as a true longwire. I chose the 30-foot height because most hams could put up a wire that high, and 10 meters because we are currently in a favorable period of the sunspot cycle.

The feed-point impedance of a 4-λ end-fed Zepp is high. So is the feed-point impedance of a center-fed 4-λ long wire. Many hams use a 135-foot center-fed dipole fed with low-loss open-wire line, but relatively few use an end-fed Zepp nowadays. With a suitable antenna tuning unit (ATU) a center-fed dipole allows for wide frequency excursions. However, the ATU must be able to handle a wide variety of resistance and reactance values.

A 4-λ long wire fed one-quarter wave from one end produces basically the same azimuth pattern as a 4-λ long end-fed Zepp, but it offers a much lower feed-point impedance, nominally around 150 Ω. This does produce an SWR at resonance ranging from 3:1 or 2:1, depending on whether a 50 or 75-Ω coax is used.

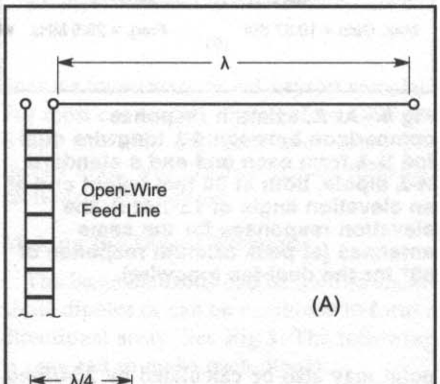

Fig 1—Sketch showing feed methods for longwire antennas. At A, end-fed "Zepp" feed. At B, feeding a longwire ¼ λ from the end. At C, center feeding a longwire.

Dual Feeding

I developed the concept of *dual feeding* a longwire so that I could use standard 75-Ω coax cable rather than open-wire line. Dual feeding involves feeding a single wire in two places, each feed being one-quarter wavelength from an end. This is shown in **Fig 3**. The feed points must be fed 180° out of phase with each other. I have termed this antenna a *Dual Fed Long Wire*, or *DFLW* for short.

Feeding the DFLW is accomplished using equal lengths for each 75-Ω coax. The two lines are terminated in a T connector at the transmitter. Make sure you dress the coaxes away from the antenna perpendicu-

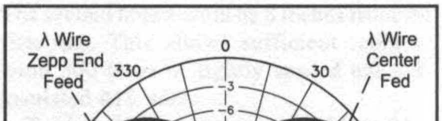

Fig 2—The azimuth pattern for 1-λ "Zepp" end-fed longwire, compared to the same antenna fed in the center.

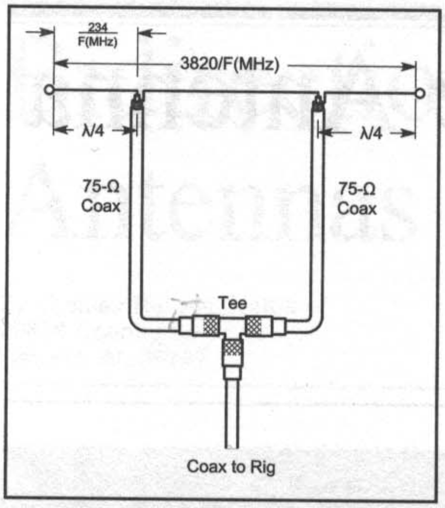

Fig 3—Dual feeding a 4-λ longwire. Each of the two identical 75-Ω coaxes feeds the wire ¼-λ from an end.

larly to minimize radiation onto the coax outer conductors. The required 180° phase difference between the two feed lines is easily handled simply by reversing the center conductor and shield connections, as shown in Fig 3.

Fig 4A compares the azimuthal pattern produced by such dual feeding to that of a standard center-fed ½-wave dipole. Fig 4B shows the elevation pattern for these antennas, with the DFLW elevation pattern taken at its 68° azimuth peak response. For the ham who does not have a rotary beam system, the DFLW looks a good choice for general coverage compared to a regular dipole.

Construction of the DFLW is straightforward, requiring only two good quality end strain insulators and two coaxial-type connectors. The length of the radiator at the 30-foot height may be calculated by using the equation 3820/Freq, in MHz. Each feed

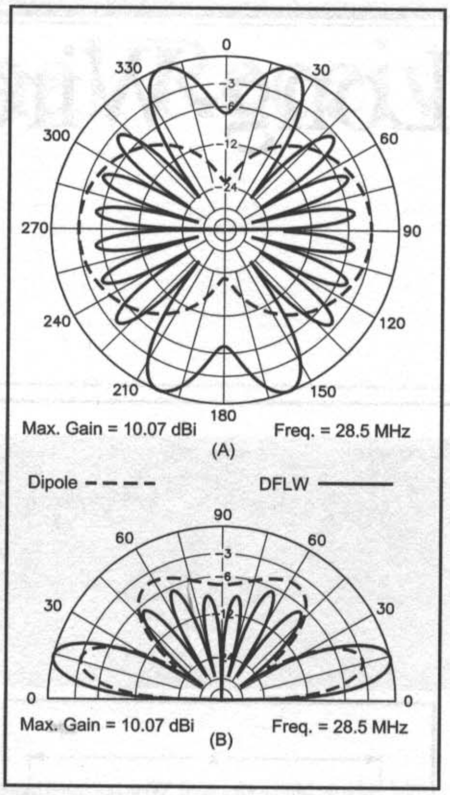

Fig 4—At A, azimuth response comparison between 4-λ longwire dual fed ¼-λ from each end and a standard ½-λ dipole, both at 30 feet height and at an elevation angle of 15°. At B, the elevation responses for the same antennas (at peak azimuth response of 68° for the dual-fed longwire).

point may also be calculated by 234/Freq, in MHz from each end of the long wire.

Fig 5 is a graph of the calculated SWR curve at the feed point for each 75-Ω coax feeder over the frequency range from 28.0 to 29.0 MHz. The SWR does not exceed 2:1 over approximately 500 kHz. This covers the active portion of the phone band on 10 meters. If you prefer the CW section, the use of a center frequency design at 28.25 MHz would be required and this would also allow operation on most of the lower portion of the phone portion as well.

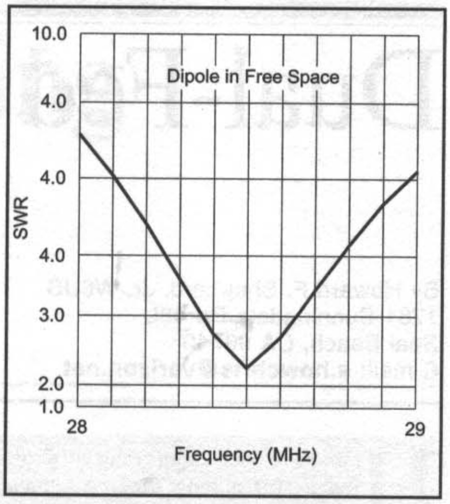

Fig 5—Computed SWR at feed point for each 75-Ω coax.

While the design frequency for this article is 28.5 MHz, you can scale the antenna to other frequencies and other bands. Due to variations in siting, wire size, ground conductivity, nature of the terrain and surrounding conductive structures, pruning of the described antenna will almost always be required for optimum performance, just as it is with any other antenna.

In conclusion, the use of dual-feed longwires can produce some interesting and very worthwhile advantages in the construction of longwire antennas. While the physical length of the DFLW described here is greater than one wavelength, it is within practical limits for many ham installations on 10 meters.

A 20-Meter Portable Mini-Yagi

By Patrick Wong, VE3RGW
115 Silver Rose Crescent
Markham, Ontario
L6C1W8, Canada

Here is a 3-element minibeam optimized for cost and weight. This is a perfect project for Field Day!

Our ham club needed a new antenna for Field Day. So we designed and built a 3-element monoband "Hamstick" Yagi. This design involves six factory-built Hamstick whips on a telescopic boom, with the driven element fed through a 1:1 balun. The adjustable boom length made it possible to adjust element spacing.

Results were good, except when the price tag was considered. The cost was about that of a factory-built triband 2-element quad, about $280 Canadian. The largest expense in the Hamstick design was the elements themselves, with the aluminum boom being the second highest-cost item. Finally, the 3/8-inch mounts for each Hamstick and the insulating studs for the driven elements were costly too, followed by the cost of the commercial 1:1 balun. We decided to shoot for an antenna based on a budget of $100 Canadian, before tax.

Structure of the Dipole Elements

The key to lowering the cost is a revised mechanical structure for the elements. We designed the elements in our new antenna as complete dipole units, ones that didn't need expensive mounting hardware.

The whole idea is to build an element that resembled the Hamstick design, but substituting PVC pipes with discrete loading coils for the spirally wound Hamstick fiberglass elements. We intended to replace the tunable Hamstick whips with whip antennas that could be found at car junkyards. The ones we found were from Chrysler vehicles. For most car models made before 1990 the whips are thin stainless-steel rods, 32-inches long, with 1/4-inch female threaded sections at the bottom.

Making the Dipole Elements

The basic elements can be used as stand-alone dipoles or can be combined to form a directional array. See **Fig 1**. The following is required to make each dipole.

- 1 section of 5/8-inch OD PVC pipe (white color), 36 inches long.
- 2 each 5/8-inch PVC cap (tight fit with pipe).
- 2 sections of 10 mm (or 3/8-inch) diameter wood dowel, each 17 inches long.
- 2 sets of 1/4-inch nuts and bolts.
- 2 stainless-steel whips, 32 inches long (base mount to match 1/4-inch screw)
- 2 each #18 enamel insulated copper wires: 17 feet for director, 20 feet for driven element, 22 feet for reflector.
- Miscellaneous vinyl electrical tape and small wood screws.

The first step is to prepare the center portion for each element. Drill a ¼-inch hole at the center of the PVC end caps. This allows a 1/4-inch screw to be mounted that serves as the attachment for the 32-inch car whip. Mark the midpoint of the 36-inch PVC pipe and drill two 1/8-inch holes 2.5 inches either side of the center mark. These holes will serve to bring out the wires from the two internal loading coils.

Next step is to prepare the loading coils themselves. **Fig 2** shows detail of these coils inside the housing. They are wound on 10-mm (3/8-inch) diameter wood dowels. Drill two 1/16-inch holes through the dowels. The first hole should be 0.5 inches from one end. The second hole should be 8 inches from the first one. This allows sufficient room to wind 200 turns of tightly spaced enamel-insulated #18 wire.

Table 1 shows parameters for this coil for

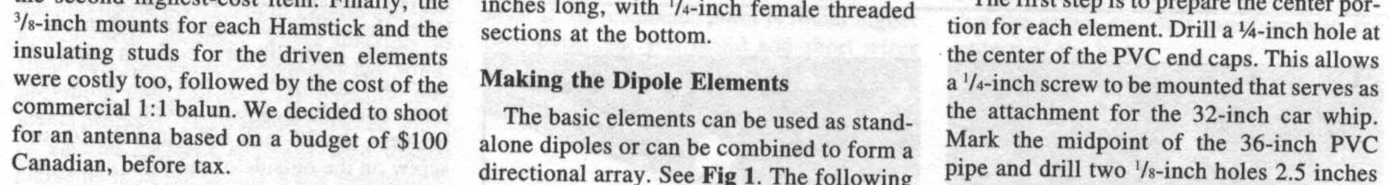

Fig 1—The structure of each dipole element. Loading coils are placed inside the 5/8-inch PVC pipe.

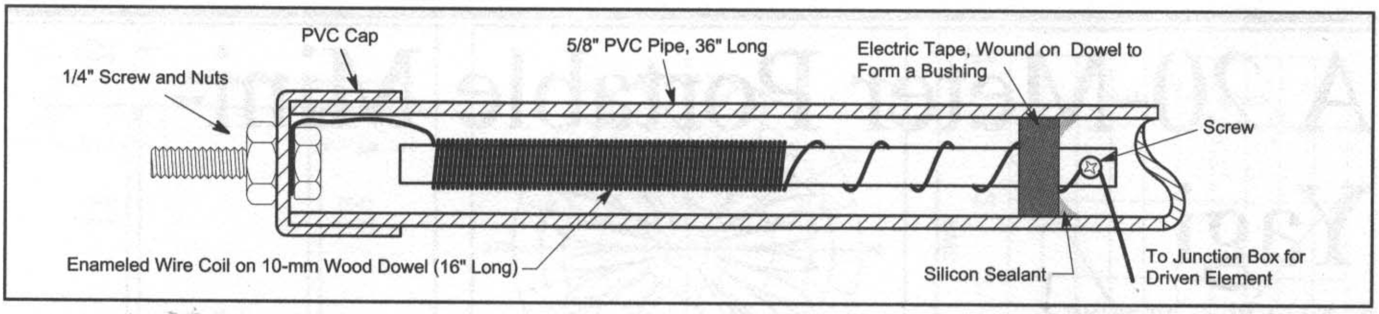

Fig 2—Cutaway view of loading coil inside one end of PVC pipe. The other end of the pipe has an identical coil inside it. The coil is tightly wound at the start of the winding, with the last turns loosely spiraled on the wooden dowel to allow some adjustment of the final inductance. The director and reflector wires are connected to the boom at final installation.

Table 1

Loading Coils, Turns and Self-Resonant Frequency

Driven element or single dipole (20-meter phone)
#18 enamel-insulated wire, 162 turns total; 153 turns tight with 9 turns loose (14.1 MHz)
Driven element or single dipole (20-meter CW)
#18 enamel-insulated wire, 164 turns total; 156 turns tight with 8 turns loose (14.0 MHz)
Reflector element (20-meter Yagi)
#18 enamel-insulated wire, 169 turns total; 160 turns tight with 9 turns loose (13.7 MHz)
Director element (20-meter Yagi)
#18 enamel-insulated wire, 159 turns total; 150 turns tight with 9 turns loose (14.6 MHz)

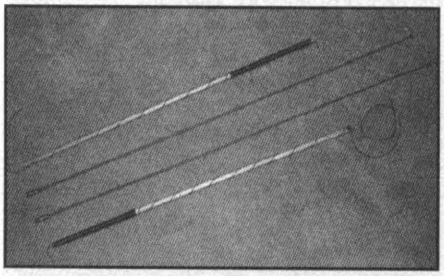

Fig 3—Photograph of two loading coils, along with the stainless-steel car whip antennas.

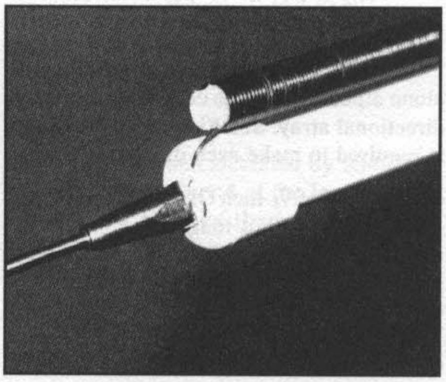

Fig 4—Photograph of one loading coil temporarily lashed to the PVC pipe for fine-tuning to the desired resonant frequency.

various resonant frequencies, using the 32-inch stainless-steel whip.

Push the enameled wire through the first hole, leaving about 2.5 inches of wire sticking out. Bent the wire towards the end and sand off the insulation. This will be connected to the $^1/_4$-inch screw at PVC cap. Start winding the coil from this hole. The winding direction is not critical so long as the same style is followed through for all elements. Count as you wind the coil and stop when you reach the number of "tight turns" specified. For example, for the driven element tuned for the phone band, you will be winding 153 turns right next to each other, with 9 additional turns wound in a loose spiral that allows some degree of adjustment.

Use a tie wrap or vinyl tape to temporarily hold down the end of the tightly wound section of the coil to the dowel. Push the long tail of the wire through the second hole and pull tight. Once you do this you can remove the temporary tie wrap. Continue to wind the rest of the coil to complete the loosely wound section. Use a wood screw screwed into the end of the dowel to terminate the loose end of the wire, leaving about 12 inches of loose wire for connections.

Fig 3 shows a pair of such loading coils and the car whips. This photo was taken before the coils are fine-tuned. Although these prototype coils have different lengths from those in Table 1, they illustrate the winding technique nicely.

Once you have prepared a pair of coils it is time to do some fine-tuning. Do this before you proceed to prepare the second or third dipole. Slight changes in material characteristics can cause differences in the final inductance. Since we use 32-inch stainless-steel whips as the tips for each dipole, it is far easier to trim the coil rather than trimming the length of the whip.

To simplify the tune up, I temporarily mount each coil to the outside of the PVC pipe. See **Fig 4**. This provides mechanical support and simulates the effect of the PVC when the coil is actually centered inside it. You trim each dipole's coils in pairs. As seen in Fig 4, the 2.5-inch end tail is bent into a small loop, which is then sandwiched between the 32-inch whip and the $^1/_4$-inch screw on the outside of the PVC cap. Use a tie wrap or vinyl tape to hold the other end of the wood dowel to the PVC pipe. The loose tails of both loading coils are then connected to a 50-Ω coax.

You can tune a dipole close to ground level with an antenna analyzer such as the MFJ-259B. Focus on obtaining the lowest SWR at the target frequency, even if the minimum value of SWR is not 1:1 because of the proximity to ground. The real value of SWR can only be seen when the antenna is mounted in open space, say, 30 feet above ground. It is best if the antenna is kept at least 10 feet from nearby objects (including yourself) during tune up.

Although the best tool for testing is an antenna analyzer, you could use a grid-dip meter or low power transmitter with SWR meter. Please note that we have to tune the director and reflector out of the amateur band, so an extremely low-power device such as an antenna analyzer is necessary. The key is to locate the frequency where the element shows the lowest SWR—That is the resonant frequency. Move the loose spiral end of both coils to move the resonant frequency of an element. If necessary, remove turn(s).

Once a pair of coils is tuned, wind vinyl electrical tape onto the wood dowel 1 inches from the feed-point end. The goal is to make a thick lump of tape that fits the inner diameter of the PVC pipe, securing and centering the coil inside the PVC pipe.

The final step is to put the coils inside the pipe. Secure the connection to the loading coil at the 1/4-inch screws inside the PVC end-cap. Then find about 24 inches of spare enameled wire. Push it through one of the 1/8-inch holes near the center of the PVC pipe until it comes out at the open end of the pipe. This will be a "fish" wire. Overlap and solder the loose tail of the loading coil to this fish wire and then pull the whole coil assembly back into the pipe. Press the end-cap tightly onto the pipe after applying PVC cement on the end of the pipe. Cut the loose wire outside the pipe, leaving a 3-inch pigtail for the final connection. Repeat the same procedure on the second coil. Inject some silicon or epoxy glue into the holes where the wires came out to seal the coil sections from moisture.

Making the Yagi

In order to reduce both cost and weight, I used a one-piece electrical-conduit boom. Since inexpensive 5/8-inch electrical conduit is sold in 10-foot sections, this governed the maximum boom length I could use. For a 3-element 20-meter Yagi, spacings as small as 4 feet between elements can work, providing that you tune the parasitic elements properly. The tradeoff between wider or smaller element spacings with loaded elements is in the usable SWR bandwidth.

I mounted my dipole elements on 3 × 3.5-inch pieces of wood, secured to the boom with a pair of conduit U-brackets and wood screws. See **Fig 5** and **Fig 6**.

I coiled 8 turns of coiled-up coax with a diameter of about 6 inches to create a common-mode choke balun and placed this close to the feed point. I mounted a plastic box at the center of the driven element to provide a waterproof environment where the feed line can be connected to both wires from the two loading coils. Such a box is not required for the director and reflector. Note that the wires from their loading coils are connected together to create the elements and are also connected to the boom.

If you wish to optimize element spacings for SWR coverage, the best way is to mount the Yagi on a 15-foot pole. This provides a quarter wave clearance from ground and can be reached from a tall ladder. **Fig 7** is a photograph of the completed minibeam in the air.

I suggest you check element self-resonances one-by-one, without the influence of the other elements. Set up the driven element on the boom first and connect it to the SWR analyzer. Verify that this dipole's resonance is on 14.0 MHz for CW use or 14.1 MHz for phone use. The usable bandwidth (where SWR is under 1.5:1) should be around 80 kHz. Such sharpness is normal, since we are using a shortened, loaded dipole instead of normal full-size wire dipole.

The two other parasitic elements can then be verified using the same method to ensure that they resonate on 13.7 MHz for the reflector and 14.6 MHz for the director. Slight errors (within a 100-kHz offset) can be corrected as follows. If the resonance frequency is lower then expected, cut the stainless-steel whip in ¼-inch steps. I found that each 1-inch shortening corresponded to a resonant frequency change of about 200 kHz. If the resonance point is found higher then expected, you could add short wires hanging at the coil-whip junction to act as a sort of capacitance hat.

This lowers the frequency but is less effective than cutting the tip of the whip is to increase the resonant frequency. It really is best to avoid cutting a whip. Once you are confident about the resonant frequencies for all three elements, mount them on the boom. I usually start by placing both parasitic elements at the ends of the boom (maximum boom length). I then place the driven element at the of the boom but slightly closer to the director. I measure the SWR. I then shift the position of the driven element towards or away from the director until I see the lowest SWR.

Once this is done, I move the position of the reflector to obtain an even lower SWR. Based on my experience, I usually find the mutual effects of adding the reflector and director shift the frequency higher than the self-resonant frequency of the driven element alone. You could also use an antenna tuner to hold down the SWR down at the transceiver.

Results

Our club ran the first field tests on this antenna during our picnic/Field-Day demonstration. We mounted the antenna on a 25-foot mobile tower with a triband vertical sitting on top of it. As a precaution, we mounted the vertical's radial downwards so that the radial couldn't interfere with the pattern of the beam.

We connected both antennas to the transceiver through antenna tuners to perform

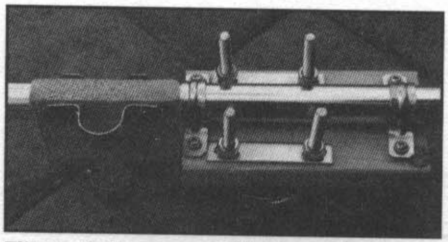

Fig 5—A close-up of the mounting scheme for an element and for the boom-to-rotator plate. Note the use of inexpensive conduit U-brackets to the wood plates. U-bolts are used to mount the mast to the boom-to-rotator plate.

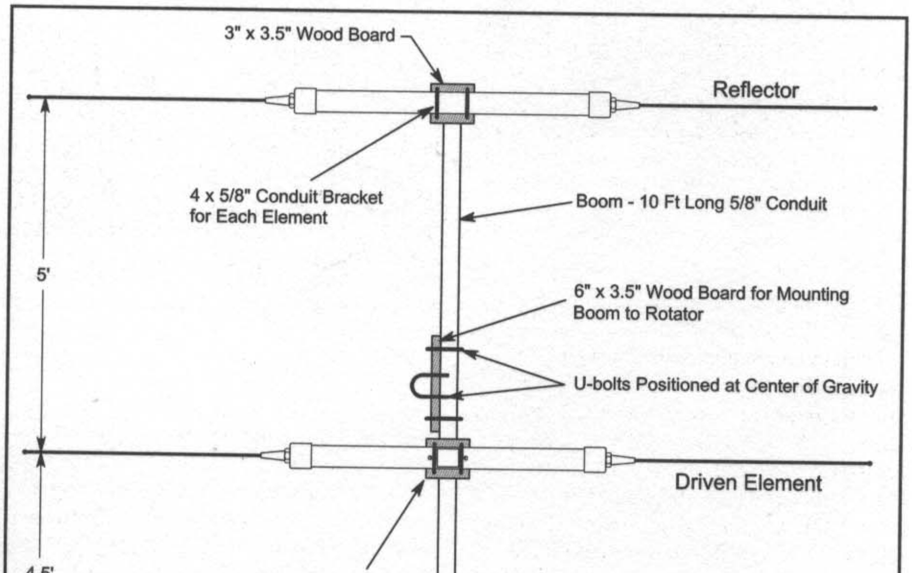

Fig 6—Schematic layout of the mini-beam.

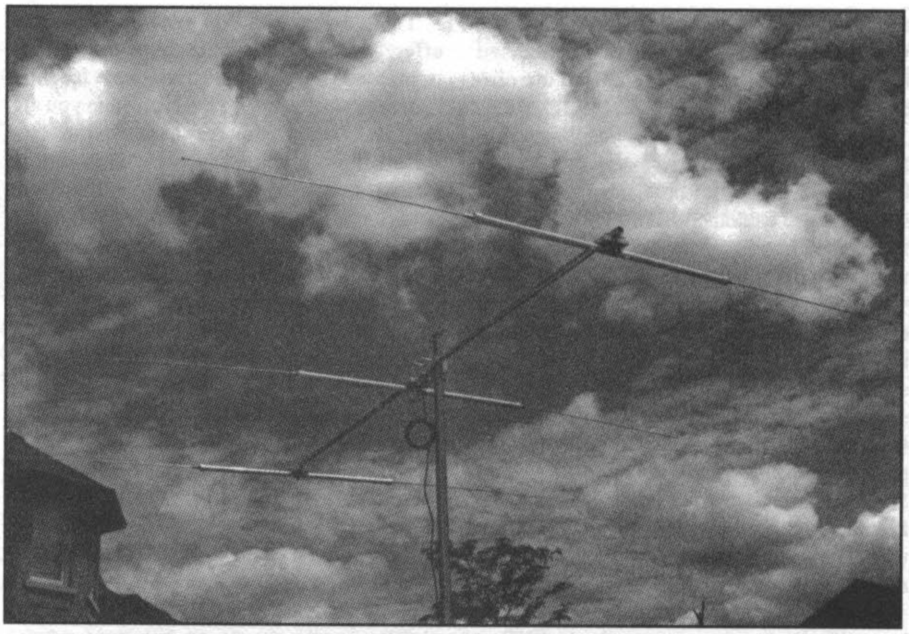

Fig 7—The finished product up in the air, ready for use.

matching and switching. Thus we could quickly switch between the two antennas to compare the signals. We finished setting up both antennas and performed a last minute fine-tuning of the beam's driven element at a height of 8 feet. We added capacitance hats to the whip/coil junction to lower the SWR some more. We then raised both antennas to the test height of 25feet. At that height there was a small improvement in the SWR of the beam.

Switching between the two antennas resulted in a much quieter noise floor from the beam. We worked a station in Calgary, rotating the beam to maximize his signal. He rated the beam as having a consistently better signal by at least 4 S-units.

The ability to kill background noise often made the beam superior in receiving because we could point it away from a noise source. This won't help, of course, if signal you want is coming from the same direction as the noise source, but at least you have certain degree of control if they are not on the same line.

The only downside to this beam is its narrow usable bandwidth, but that is an expected character for a small antenna with heavy inductance loading. The solid-state final of our radio is very sensitive to SWR. It reduced power as soon as it sensed the slightest sign of reflected power from load. We had to rely on the antenna tuner to perform slight matching as we moved around on the 20-meter band.

Notes

FEEDBACK

Please use this form to give us your comments on this book and what you'd like to see in future editions, or e-mail us at **pubsfdbk@arrl.org** (publications feedback). If you use e-mail, please include your name, call, e-mail address and the book title, edition and printing in the body of your message. Also indicate whether or not you are an ARRL member.

Where did you purchase this book?

☐ From ARRL directly ☐ From an ARRL dealer

Is there a dealer who carries ARRL publications within:

☐ 5 miles ☐ 15 miles ☐ 30 miles of your location? ☐ Not sure.

License class:

☐ Novice ☐ Technician ☐ Technician with code ☐ General ☐ Advanced ☐ Amateur Extra

---

Name ARRL member? ☐ Yes ☐ No

______________________________ Call Sign ______________

Daytime Phone ( ) ______________________ Age ______________

Address ______________________________

City, State/Province, ZIP/Postal Code ______________________

If licensed, how long? ______________ e-mail address: ______________

Other hobbies ______________________________

____

Occupation ______________________________

For ARRL use only	**ACV7**
Edition	1 2 3 4 5 6 7 8 9 10 11 12
Printing	1 2 3 4 5 6 7 8 9 10 11 12

From ______________________________

____

____

Please affix postage. Post Office will not deliver without postage.

EDITOR, ACV7
ARRL—THE NATIONAL ASSOCIATION FOR AMATEUR RADIO
225 MAIN STREET
NEWINGTON CT 06111-1494

please fold and tape

Hooray for antennas!

This is the seventh in the very popular *ARRL Antenna Compendium* series. You'll find dozens of articles inside – covering a very wide range of antenna-related topics.

One of the most popular topics in previous volumes has been antennas for the lower HF bands. This topic is well represented in Vol 7 also, with several articles dealing with some aspect of low-band antennas or operating.

And with the increasing number of restrictions hams find in their neighborhoods against putting up towers and antennas, there has been a resurgence of operating on the road – from cars, vans or motor homes. Volume 7 has eight articles devoted to mobile antennas.

Here's a complete list of the major topics covered in Volume 7.

- **30, 40, 80 and 160-Meter Antennas**
- **Measurements and Computations**
- **Mobile Antennas**
- **Multiband Antennas**
- **Practical Tips**
- **Propagation and Ground Effects**
- **Quad Antennas**
- **Special Antennas**
- **Stealth Antennas**
- **Tuners and Transmission Lines**
- **Vertical Antennas**
- **VHF/UHF Antennas**
- **Wire Antennas**
- **Yagi Antennas**

There's something of interest for every antenna enthusiast in *The ARRL Antenna Compendium, Vol 7*!

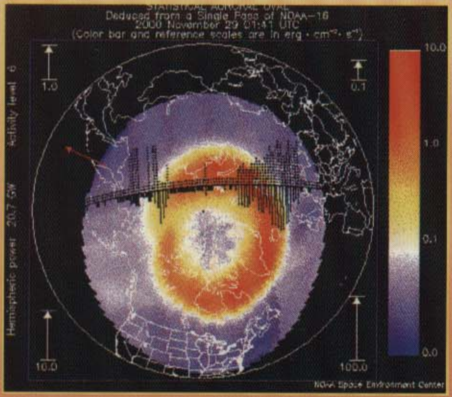

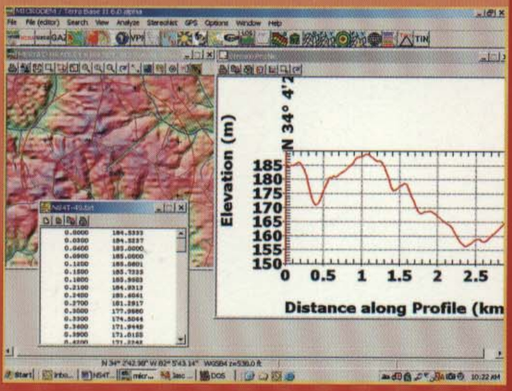

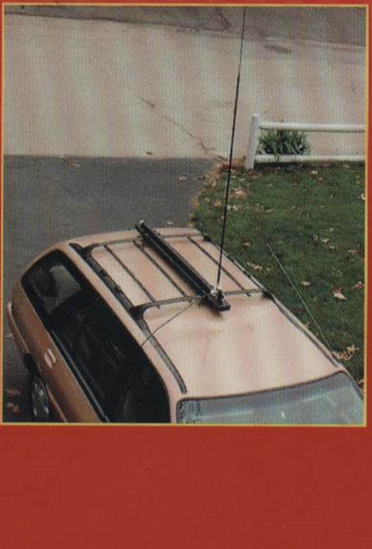

Published by:
ARRL *The national association for AMATEUR RADIO*
225 Main Street • Newington, CT 06111-1494

***ARRLWeb*: www.arrl.org/**

ISBN 0-87259-860-8
52495
EAN
9 780872 598607

ISBN: 0-87259-8608 ARRL Order No. 8608